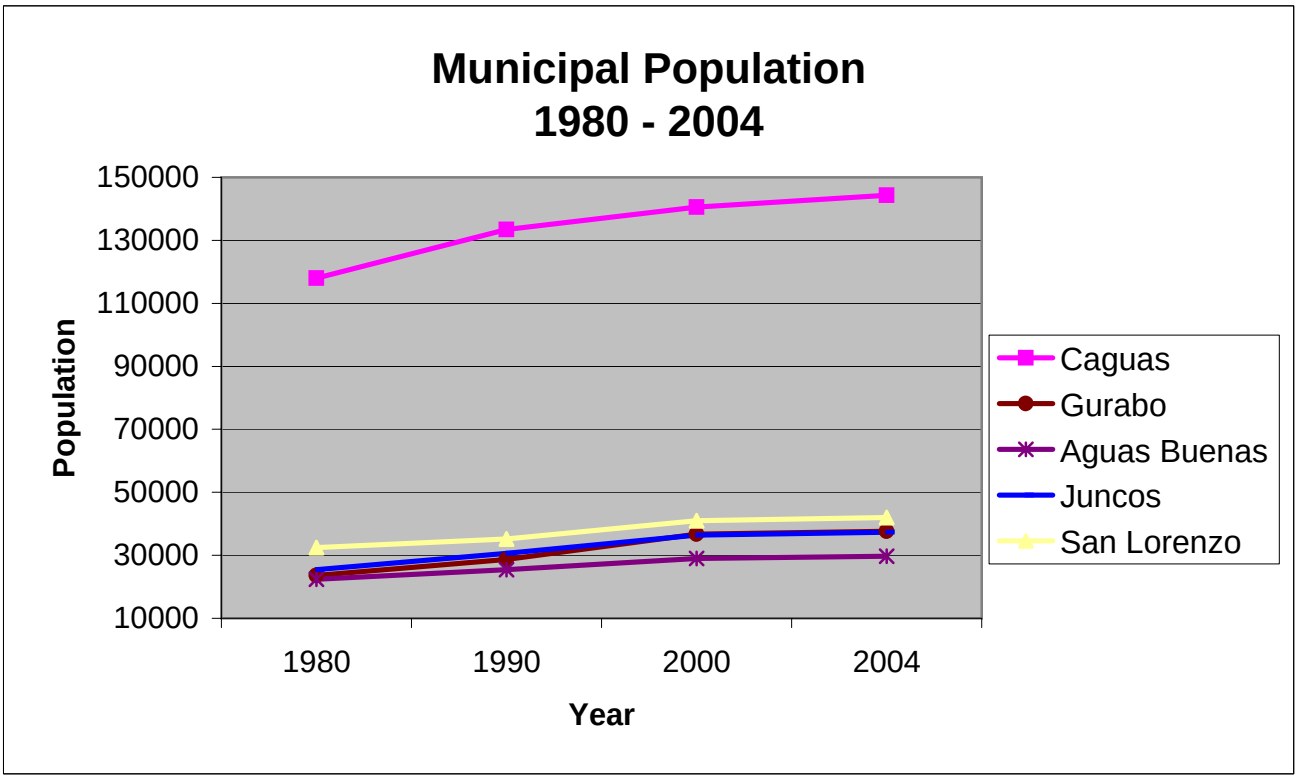

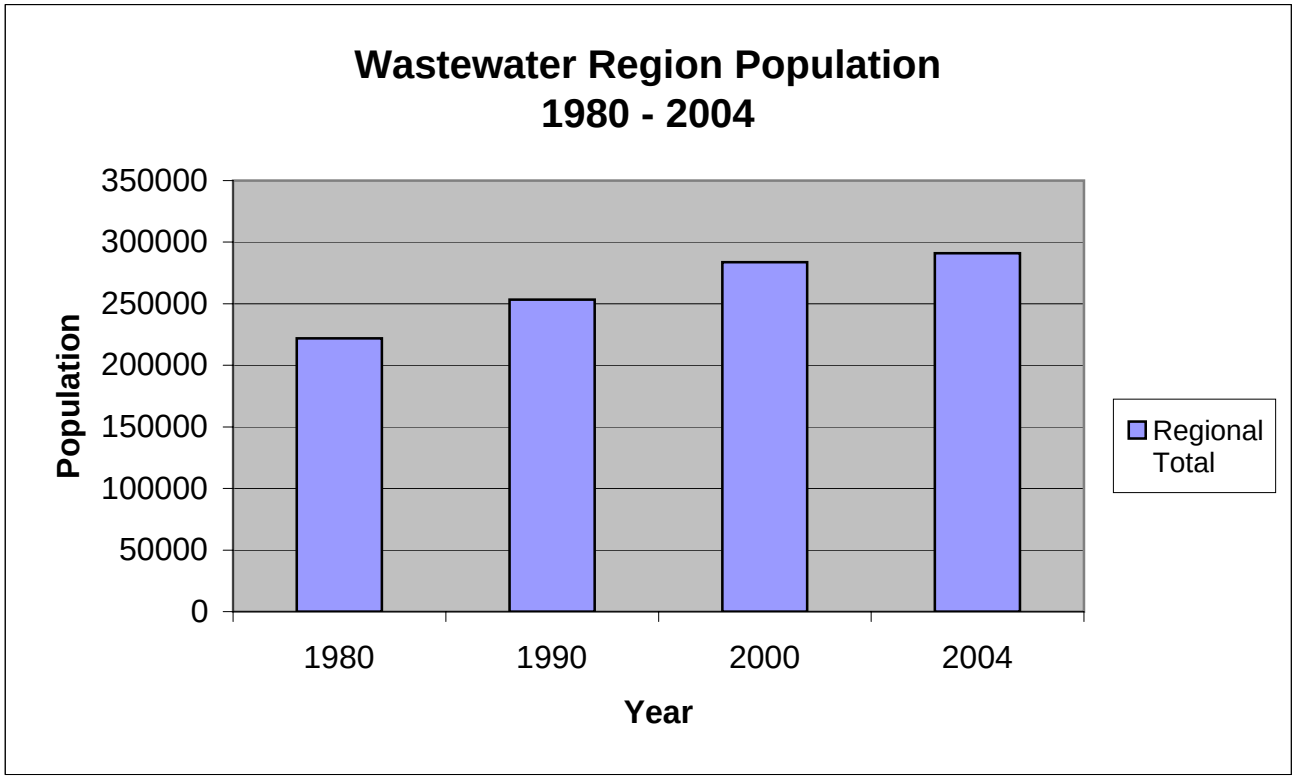

VINCENTY, HERES & LAURIA ENVIRONMENTAL ENGINEERS
MALCOLM PIRNIE

Population Growth Chart

Figure 3-12

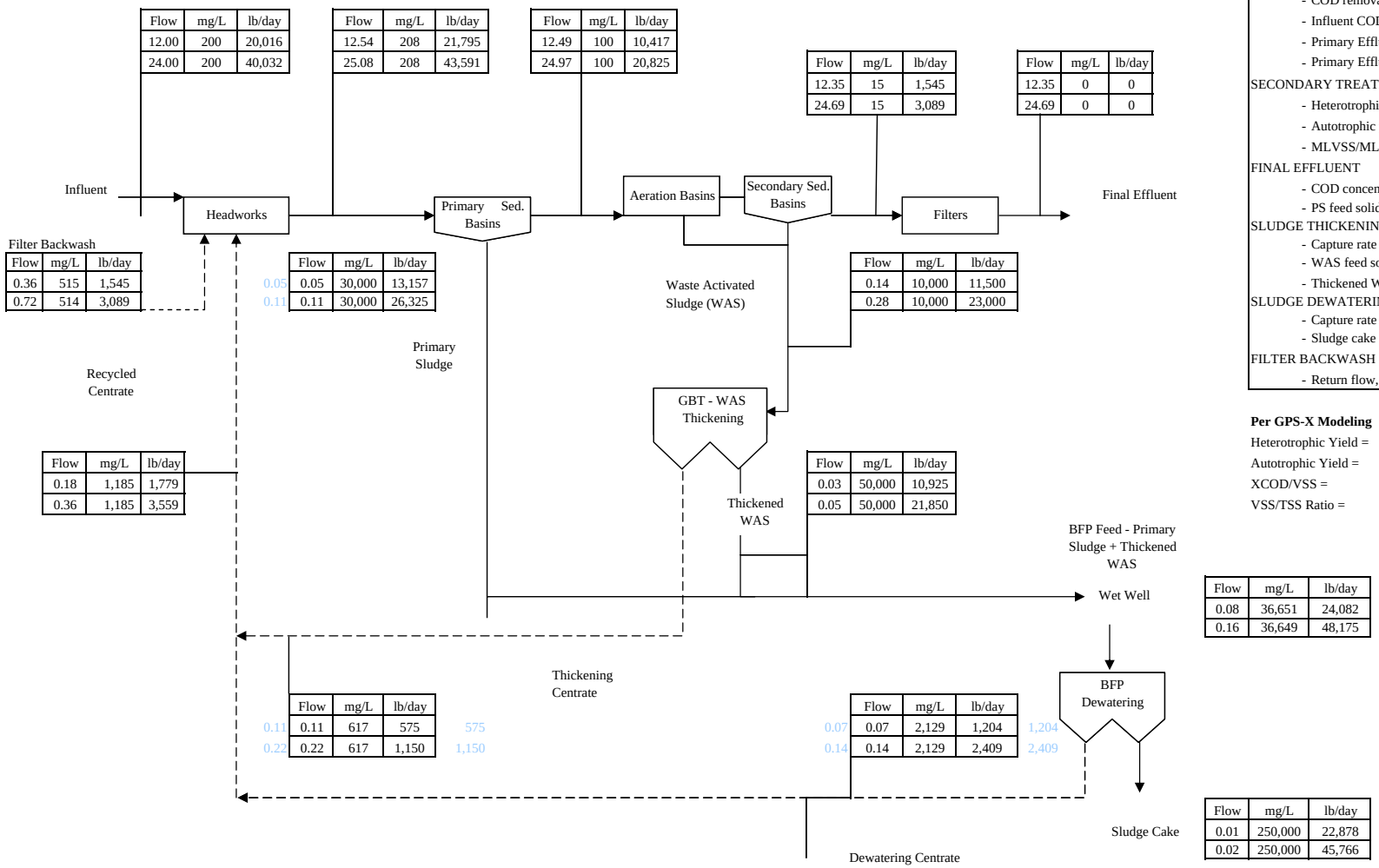

Flow	mg/L	lb/day
12.00	200	20,016
24.00	200	40,032

Flow	mg/L	lb/day
12.54	208	21,795
25.08	208	43,591

Flow	mg/L	lb/day
12.49	100	10,417
24.97	100	20,825

Flow	mg/L	lb/day
12.35	15	1,545
24.69	15	3,089

Flow	mg/L	lb/day
12.35	0	0
24.69	0	0

Flow	mg/L	lb/day
0.36	515	1,545
0.72	514	3,089

Flow	mg/L	lb/day
0.05	0.05	30,000	13,157
0.11	0.11	30,000	26,325

Flow	mg/L	lb/day
0.14	10,000	11,500
0.28	10,000	23,000

Flow	mg/L	lb/day
0.18	1,185	1,779
0.36	1,185	3,559

Flow	mg/L	lb/day
0.03	50,000	10,925
0.05	50,000	21,850

Flow	mg/L	lb/day
0.08	36,651	24,082
0.16	36,649	48,175

Flow	mg/L	lb/day	
0.11	0.11	617	575	575
0.22	0.22	617	1,150	1,150

Flow	mg/L	lb/day	
0.07	0.07	2,129	1,204	1,204
0.14	0.14	2,129	2,409	2,409

Flow	mg/L	lb/day
0.01	250,000	22,878
0.02	250,000	45,766

PLANT PARAMETERS USED

PRIMARY SEDIMENTATION	
- TSS removal efficiency, % =	50
- COD removal efficiency, % =	30
- Influent COD, mg/L =	310
- Primary Effluent COD, mg/L =	217
- Primary Effluent NH_3-N, mg/L =	22
SECONDARY TREATMENT	
- Heterotrophic yield, lb VSS/lb COD removed =	0.43
- Autotrophic yield, lb VSS/lb N removed =	0.24
- MLVSS/MLTSS ratio =	0.77
FINAL EFFLUENT	
- COD concentration, mg/L =	30
- PS feed solids concentration =	3%
SLUDGE THICKENING	
- Capture rate =	95%
- WAS feed solids concentration =	1%
- Thickened WAS solids concentration =	5%
SLUDGE DEWATERING	
- Capture rate =	95%
- Sludge cake solids concentration =	25%
FILTER BACKWASH	
- Return flow, % of influent	3%

Per GPS-X Modeling

Heterotrophic Yield =	0.63	mg COD / mg COD
Autotrophic Yield =	0.24	mg COD / mg N
XCOD/VSS =	1.48	mg COD / mg VSS
VSS/TSS Ratio =	0.77	VSS / TSS

VINCENTY, HERES & LAURIA ENVIRONMENTAL ENGINEERS

MALCOLM PIRNIE

CRWWTP Solids Mass Balance Flow Chart

Figure 4-1