CASTILLOS DE LAS MONTAÑAS (SEA VIEW)

Estudio de Tránsito

Carretera PR-925, Bo. Antón Ruiz
Humacao, Puerto Rico

Febrero de 2005

FJR & Asoc. Urban Planners
Guaynabo, Puerto Rico

Castillos de las Montañas
Estudio de Tránsito
PR-925, Bo. Antón Ruiz
Humacao, Puerto Rico

TABLA DE CONTENIDO

LISTA DE FIGURAS	2
LISTA DE ANEJOS	3
SECCION 1.0 INTRODUCCION	4
SECCION 2.0 METODOLOGIA	10
SECCION 3.0 GENERACION DE VIAJES	17
SECCION 4.0 ANALISIS DE TRANSITO	26
SECCION 5.0 CONCLUSIONES	42

LISTA DE FIGURAS

Figura Núm. 1	Mapa de localización
Figura Núm. 2	Geometría de las intersecciones
Figura Núm. 3	Volúmenes de Tránsito de Hora Pico, AM actuales
Figura Núm. 4	Volúmenes de Tránsito de Hora Pico, PM actuales
Figura Núm. 5	Volúmenes de Tránsito de Hora Pico, AM con proyecto
Figura Núm. 6	Volúmenes de Tránsito de Hora Pico, PM con proyecto
Figura Núm. 7	Niveles de Servicio, Hora Pico AM actuales
Figura Núm. 8	Niveles de Servicio, Hora Pico PM actuales
Figura Núm. 9	Niveles de Servicio, Hora Pico AM con proyecto
Figura Núm. 10	Niveles de Servicio, Hora Pico PM con proyecto

FJR & Asociados Ingenieros Planificadores. Saturno 2070, Urb. Apolo, guaynabo PR 00969. Tel (787) 790-3854

LISTA DE ANEJOS

Anejo 1	Conteos de Tránsito
Anejo 2	Generación de Viajes
Anejo 3	Análisis de Tránsito Actual (AASIDRA)
Anejo 4	Análisis de Tránsito Proyectado (AASIDRA)

FJR & Asociados Ingenieros Planificadores. Saturno 2070, Urb. Apolo, guaynabo PR 00969. Tel (787) 790-3854

SECCION 1.0

INTRODUCCION

La firma Desarrolladora April Industries Group, propone el desarrollo residencial de una finca, localizada en la carretera estatal PR-925 del Barrio Antón Ruiz del Municipio de Humacao. Este desarrollo contará de:

- 210 unidades de viviendas tipo "walk-up".
- 92 unidades de viviendas unifamiliares
- 720 unidades de viviendas tipo "cluster"

La Figura Núm. 1 muestra la localización del desarrollo propuesto.

Figura Núm. 1 : Mapa de Localización

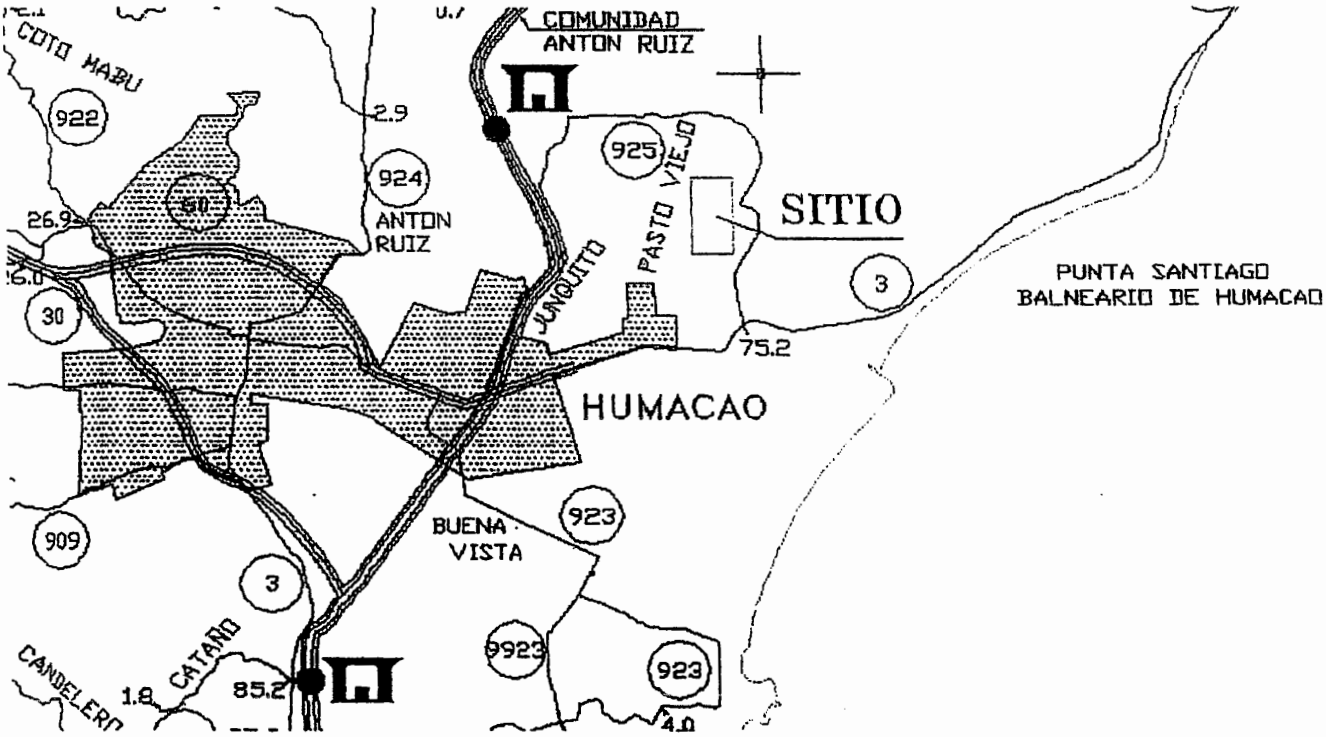

FJR & Asociados Ingenieros Planificadores. Saturno 2070, Urb. Apolo, guaynabo PR 00969. Tel (787) 790-3854

El objetivo de este informe es presentar los resultados del Estudio de Tránsito llevado a cabo para evaluar los efectos que tendría el propuesto desarrollo residencial en el tránsito vehicular del área. Las intersecciones estudiadas son las siguientes:

1. Carreteras estatales PR-3, PR-925 y Rampa oeste de PR-53
2. Carreteras estatal PR-3 y Rampa este de PR-53
3. Carreteras estatal PR-3 y Acceso a Centro Comercial (JC Penney)
4. Carreteras estatal PR-3 y Acceso a Ciudad Cristiana
5. Carreteras estatales PR-3 y PR-925
6. Carretera estatal PR-925 & Acceso Principal al desarrollo (al este del proyecto, próxima a PR-3)
7. Carretera estatal PR-925 & Acceso Secundario al desarrollo (al oeste del proyecto)

La Figura Num. 2 muestra las geometrías de las intersecciones estudiadas

Este informe ha sido preparado según autorizado por el Sr. Orlando Medina de la firma proponente en cumplimiento de los requisitos de la Oficina de Control de Acceso de la Autoridad de Carreteras y Transportación (ACT).

Figura Núm. 2
Geometría de las intersecciones

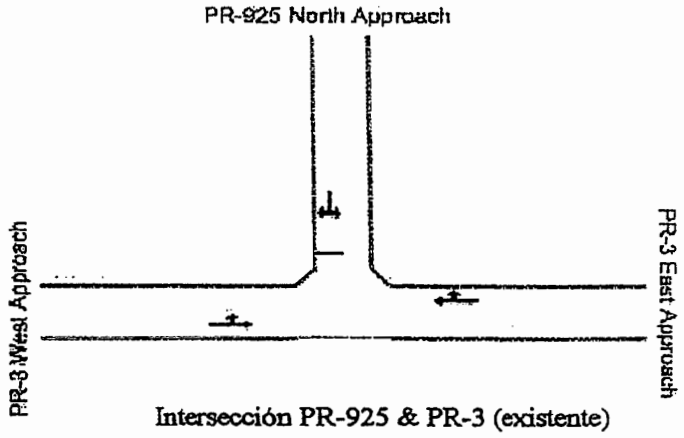

Intersección PR-925 & PR-3 (existente)

Figura Núm. 2

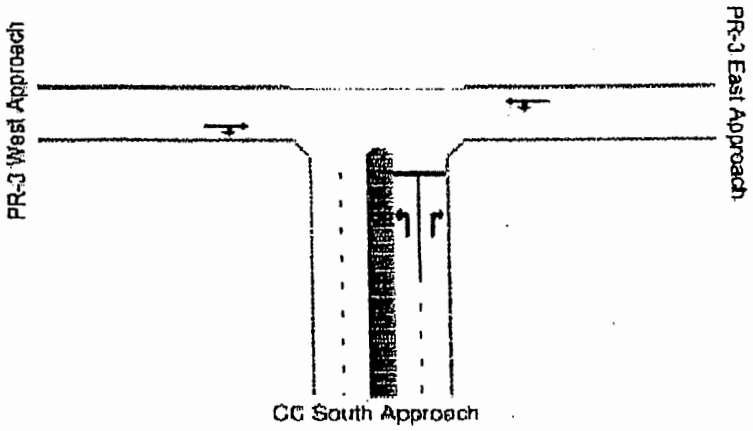

Intersección PR-3 & acceso Ciudad Cristiana

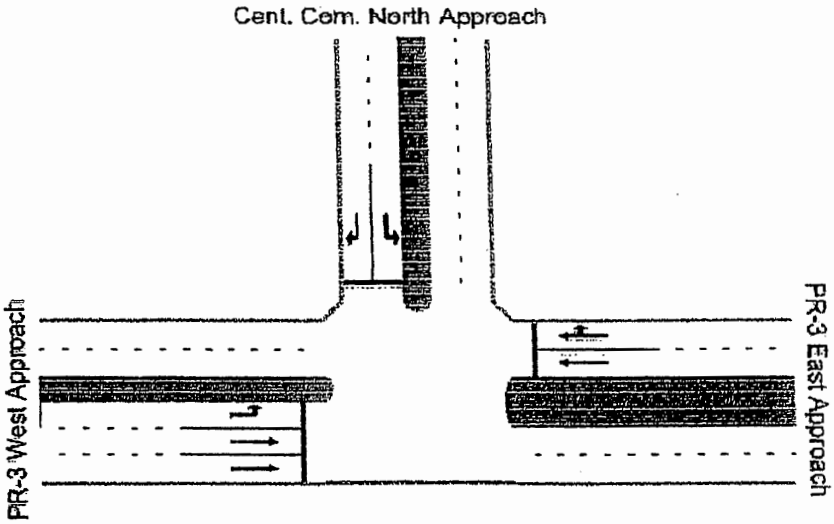

Int. PR-3 & Acceso a Centro Comercial

FJR & Asociados Ingenieros Planificadores. Saturno 2070, Urb. Apolo, guaynabo PR 00969. Tel (787) 790-3854

Figura Núm. 2

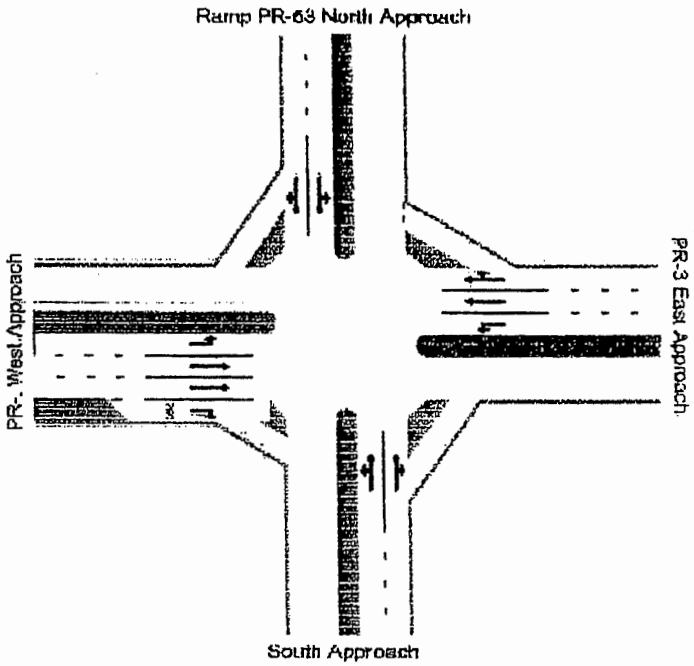

Int. PR-3, Rampa PR-53 & Acceso Villa Humacao

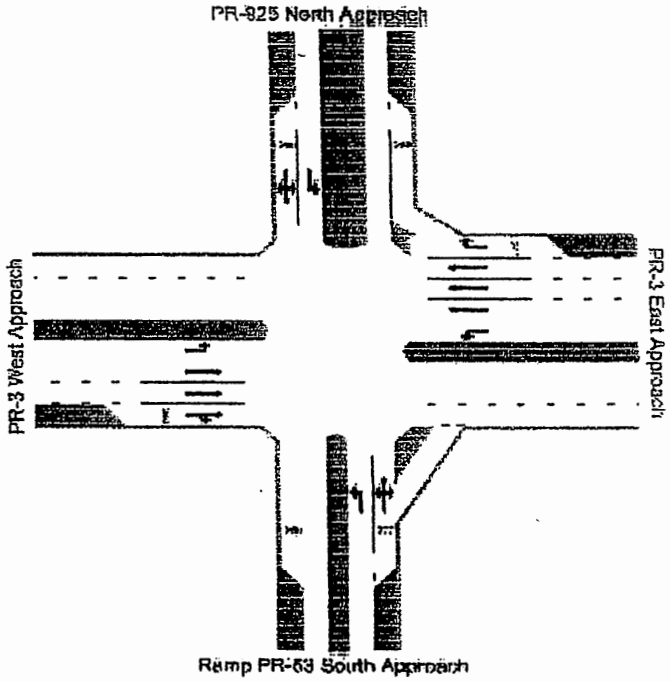

Int. PR-3, PR-925 & Rampa PR-53

Figura Núm. 2

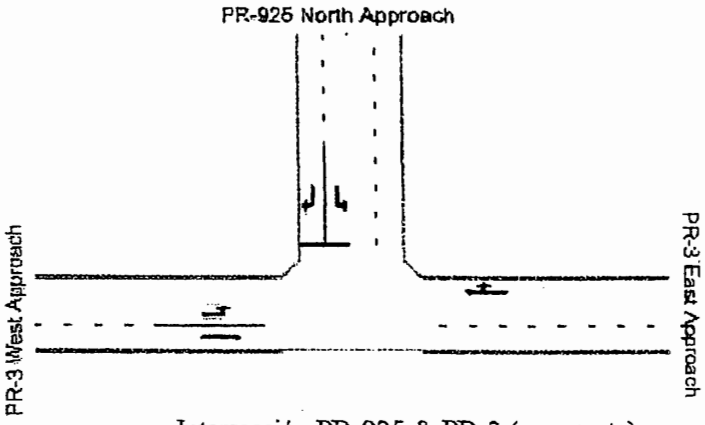

Intersección PR-925 & PR-3 (propuesta)

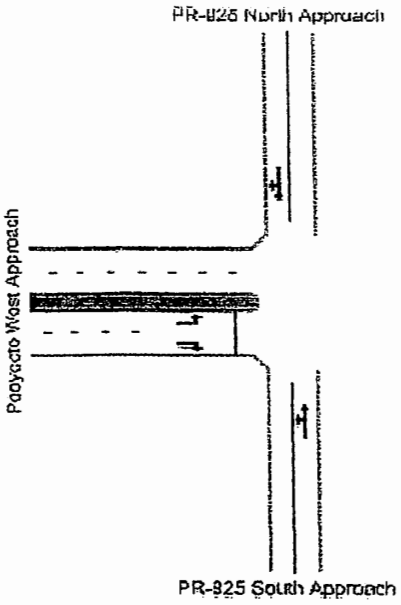

Acceso Principal

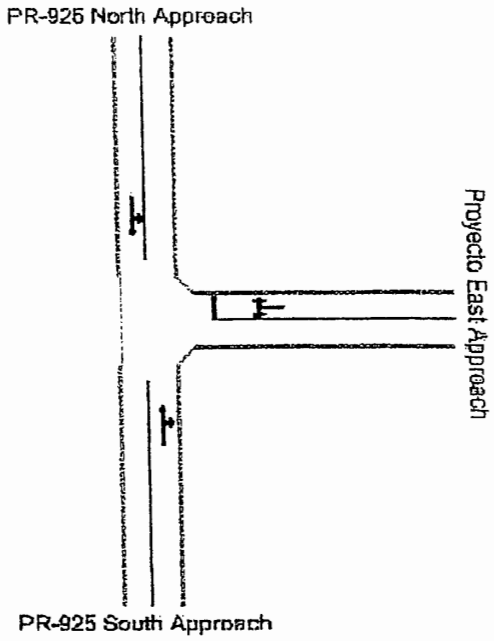

Acceso Secundario

SECCION 2.0

METODOLOGIA

Para desarrollar este informe se han hecho estudios del tránsito actual y proyectado en la carretera estatal PR-3, en la intersección más próxima al desarrollo. Se ha tomado en consideración el tránsito a ser generado por el desarrollo propuesto.

Personal técnico de FJR & Asociados, realizó conteos manuales de tránsito de Hora Pico los días martes 15 y miércoles 16 de febrero de 2005, Estos día representan condiciones de tránsito promedio en la semana (ver Anejo 1). Las figuras números 3 y 4 muestran los volúmenes de tránsito actuales de las intersecciones durante las Horas Pico AM y PM respectivamente.

Se determinaron los volúmenes de tránsito a ser generados por el propuesto desarrollo los mismos fueron distribuidos siguiendo los patrones de tránsito existentes en el área.Utilizando los datos antes mencionados en combinación con el modelo de computadora aaSIDRA 2.0, se determinó el nivel de servicio actual y futuro en cada intersección estudiada.

Figura Núm. 3: Volúmenes de Tránsito de Hora Pico, AM actuales

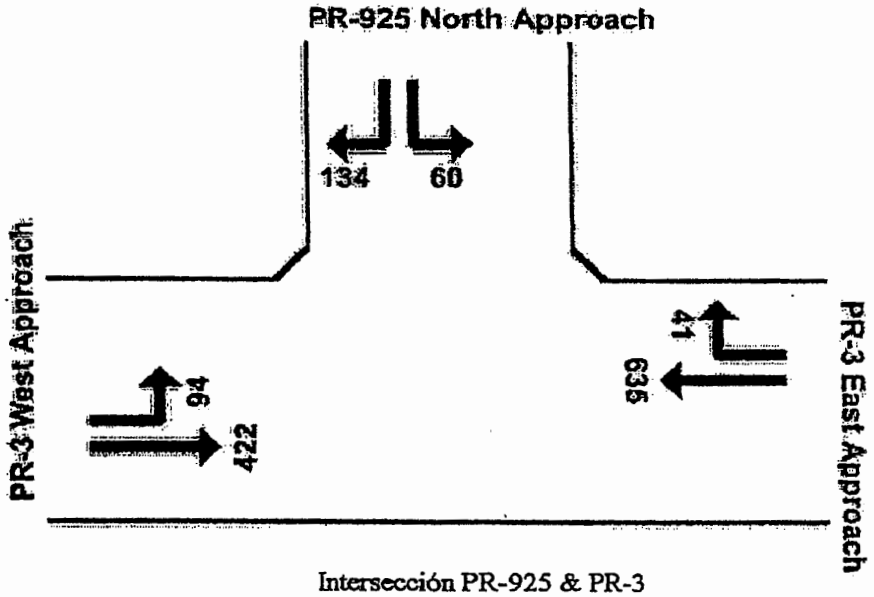

Intersección PR-925 & PR-3

Figura Núm. 3

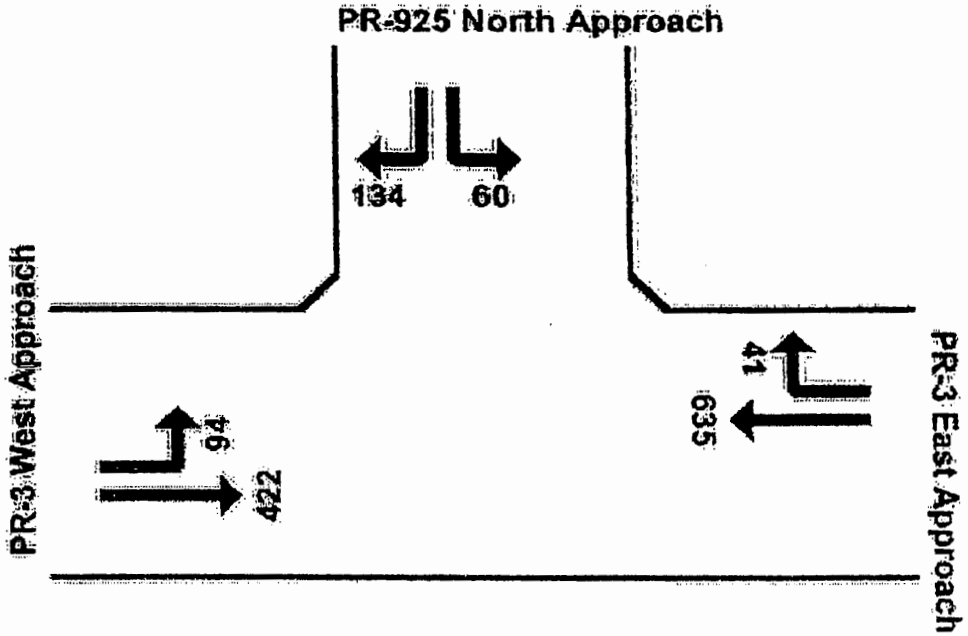

Intersección PR-925 & PR-3

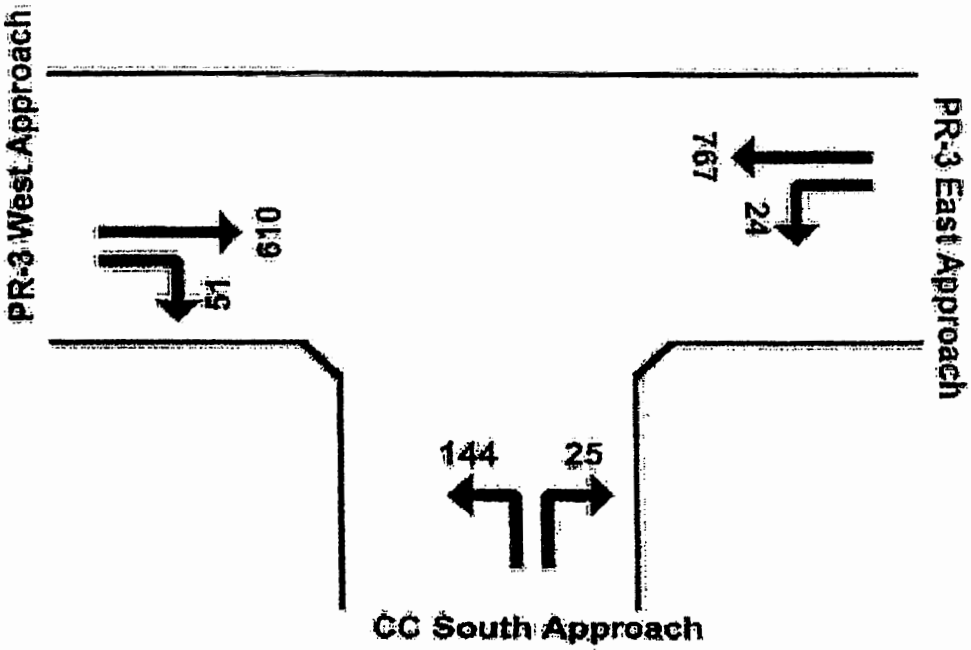

Intersección PR-3 & acceso Ciudad Cristiana

Figura Núm. 3

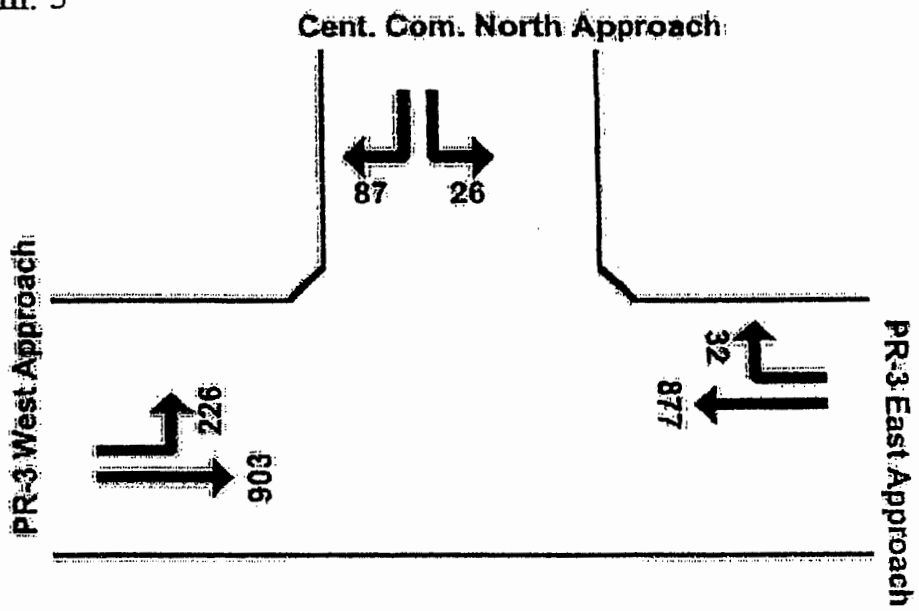

Int. PR-3 & Acceso a Centro Comercial

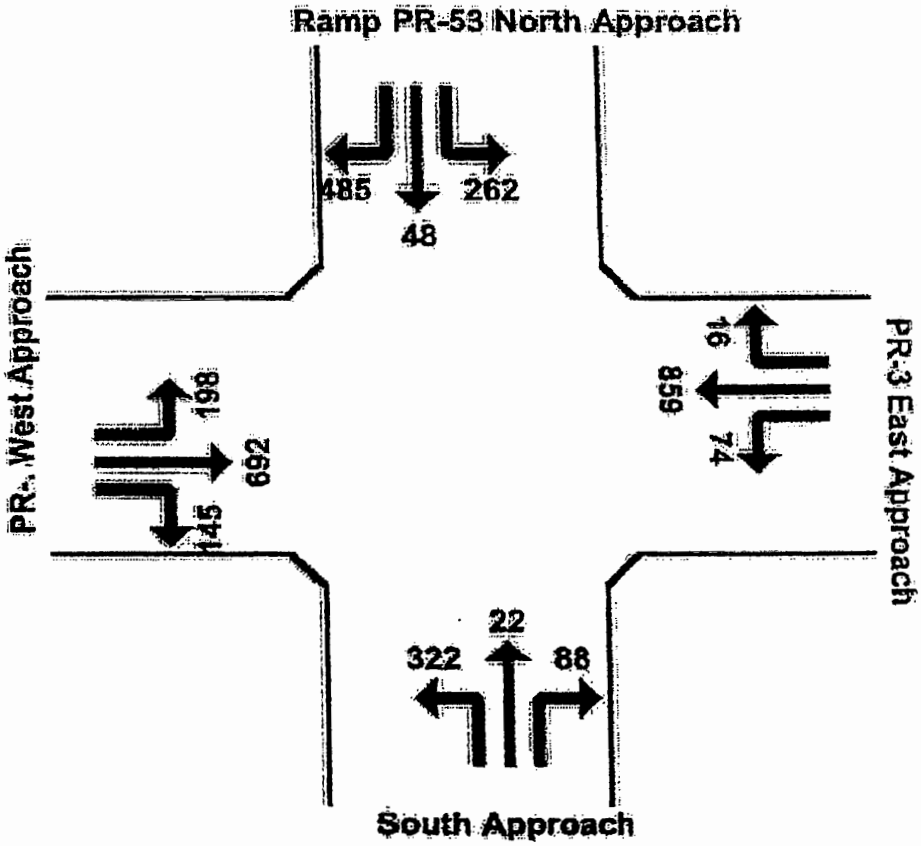

Int. PR-3, Rampa PR-53 & Acceso Villa Humacao

Figura Núm. 3

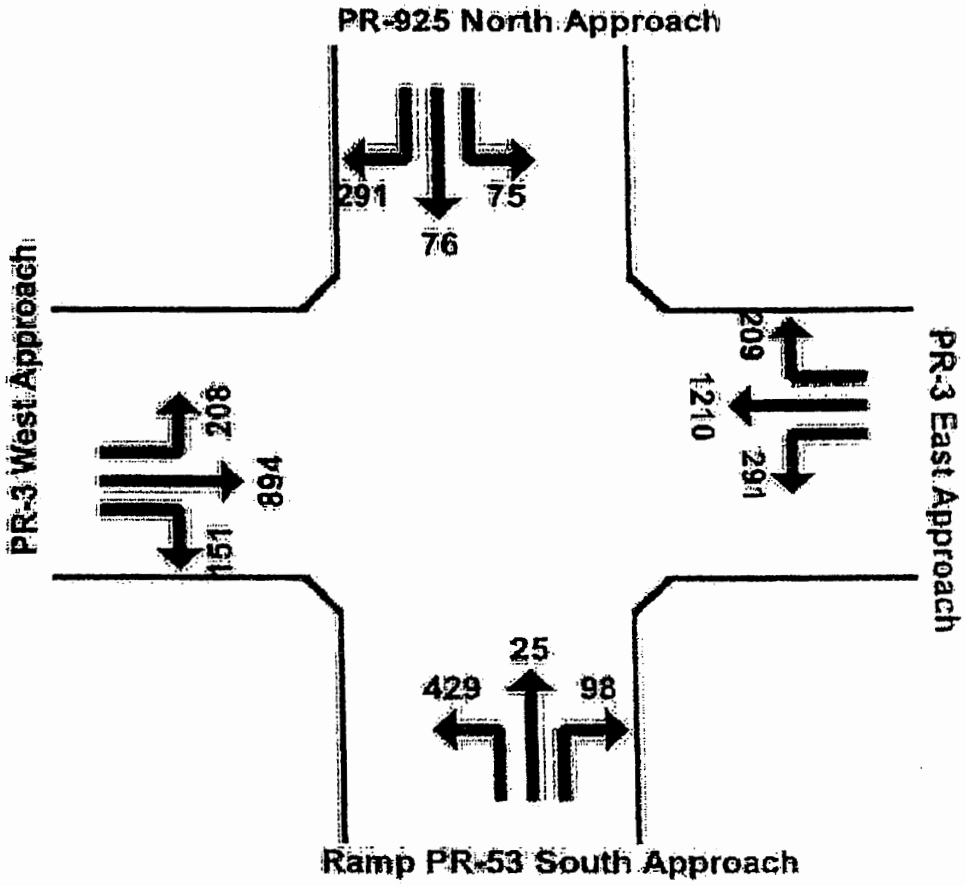

Int. PR-3, PR-925 & Rampa PR-53

Figura Núm. 4
Volúmenes de Tránsito de Hora Pico, PM actuales

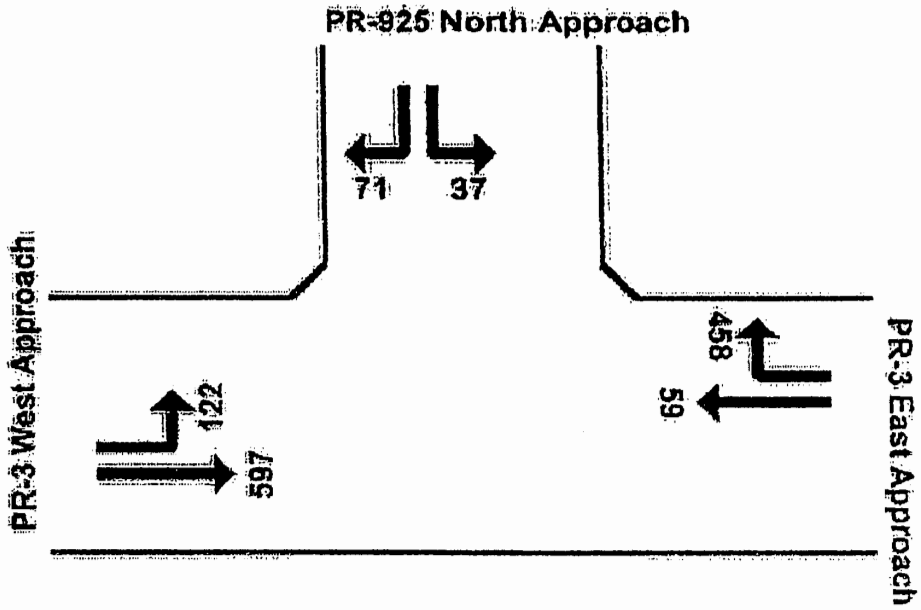

Intersección PR-925 & PR-3

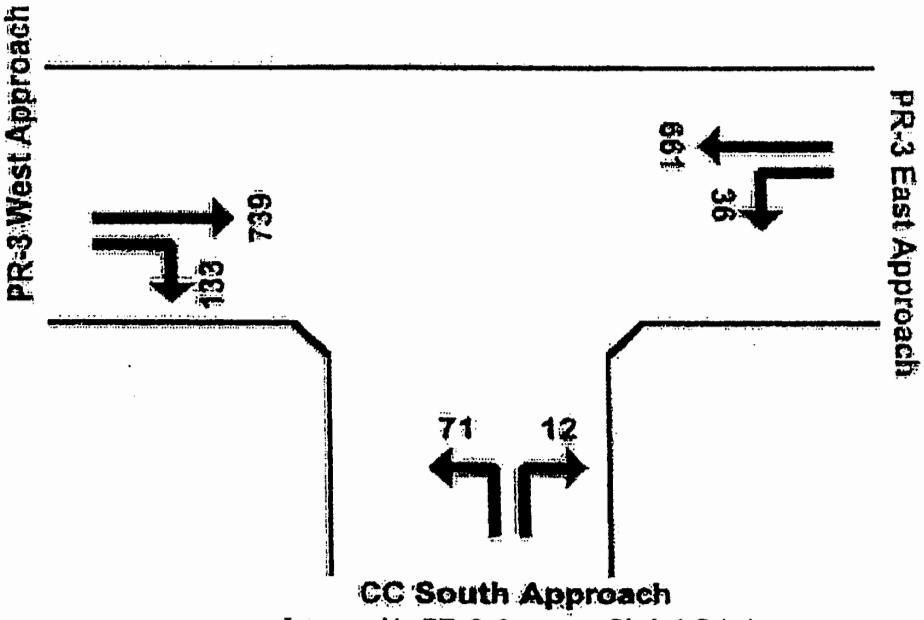

Intersección PR-3 & acceso Ciudad Cristiana

Figura Núm. 4

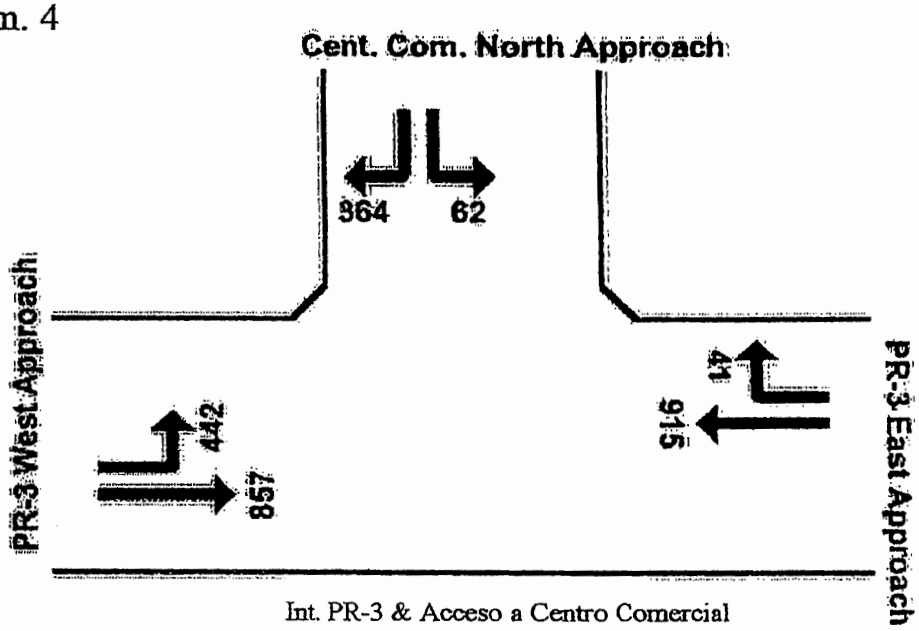

Int. PR-3 & Acceso a Centro Comercial

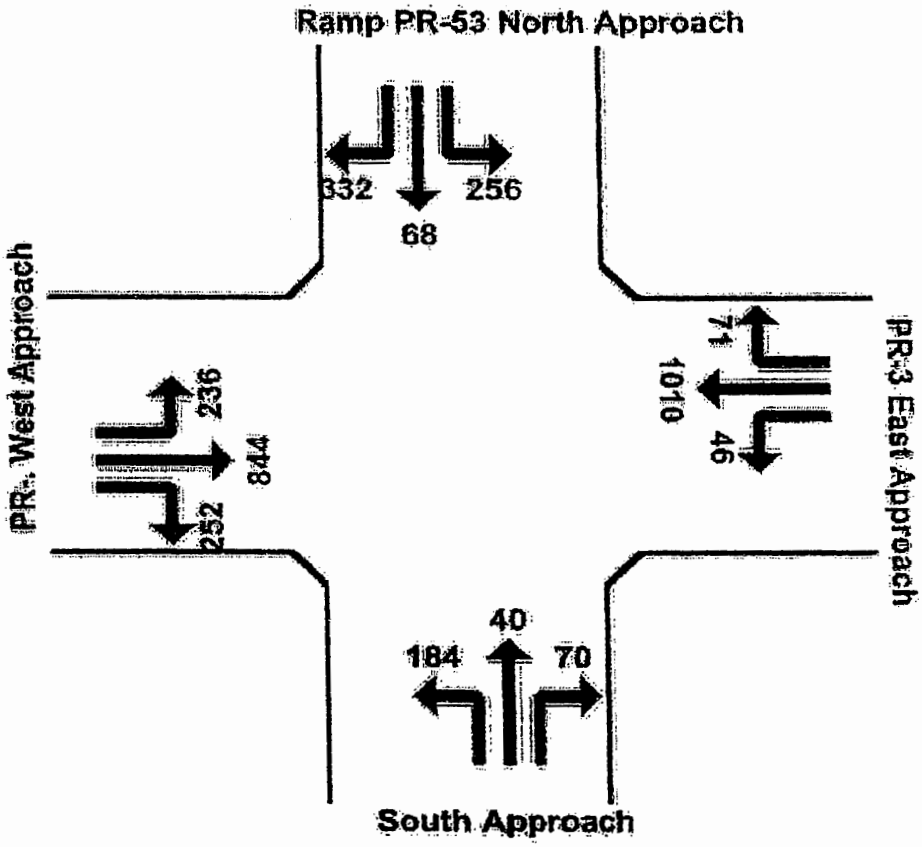

Int. PR-3, Rampa PR-53 & Acceso Villa Humacao

Figura Núm. 4

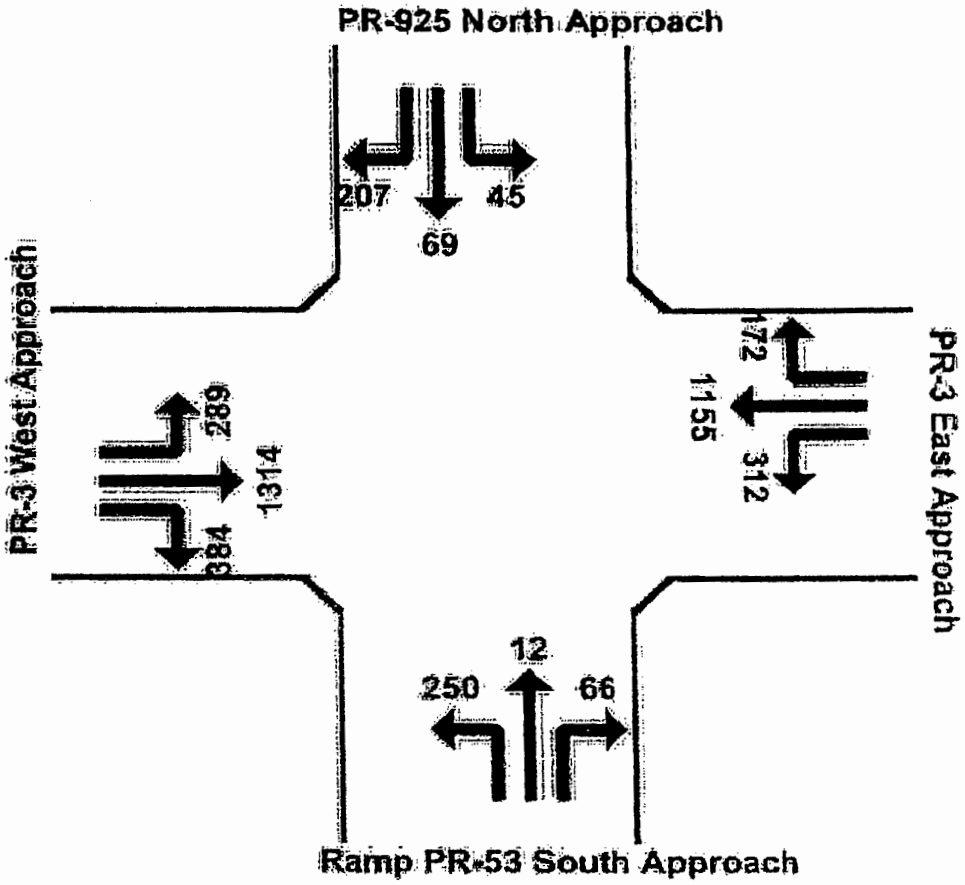

Int. PR-3, PR-925 & Rampa PR-53

FJR & Asociados Ingenieros Planificadores. Saturno 2070, Urb. Apolo, guaynabo PR 00969. Tel (787) 790-3854

SECCION 3.0

GENERACION DE VIAJES

El tránsito que generará el proyecto propuesto se estimó mediante el uso del programa de "Trip Generation" desarrollado por "Institute of Transportation Engineers" (ver Anejo 2). La Tabla Núm. 1 muestra los viajes a ser generados por el desarrollo propuesto.

Tabla Núm. 1
Viajes Generados

	Hora Pico AM		Hora Pico PM		Total Diario
Uso Residencial	Entran	Salen	Entran	Salen	
210 unidades Tipos "Walk-UP"	17	90	88	44	1392
92 unidades unifamiliares	18	55	63	36	960
720 unidades Tipo "Cluster"	58	302	274	137	4450
Total	93	447	425	217	6802

El tránsito proyectado en las intersecciones, para las horas pico AM y PM se muestra en las figuras 5 y 6 respectivamente.

FJR & Asociados Ingenieros Planificadores. Saturno 2070, Urb. Apolo, guaynabo PR 00969. Tel (787) 790-3854

Figura Núm. 5
Volúmenes de Tránsito de Hora Pico, AM con proyecto

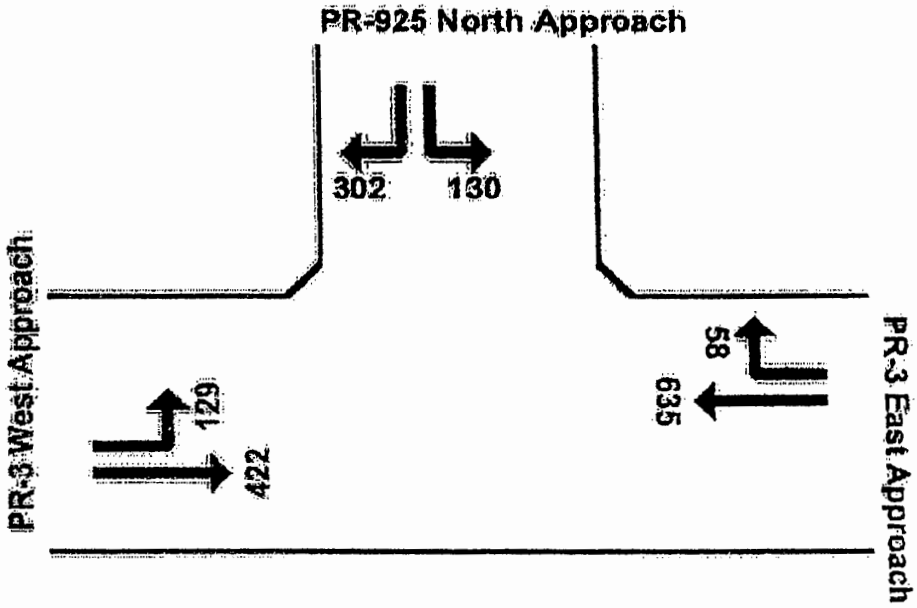

Intersección PR-925 & PR-3

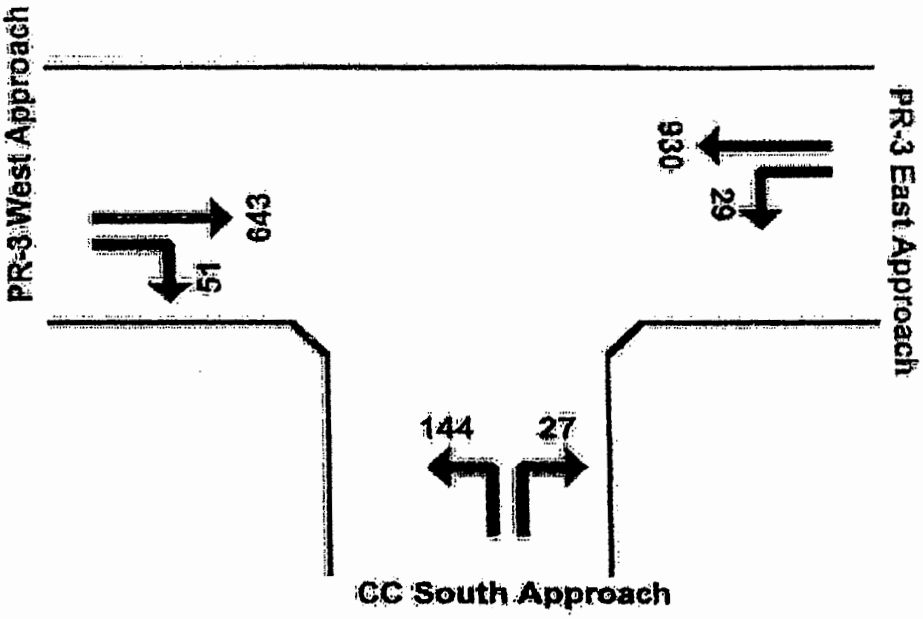

Intersección PR-3 & acceso Ciudad Cristiana

Figura Núm. 5

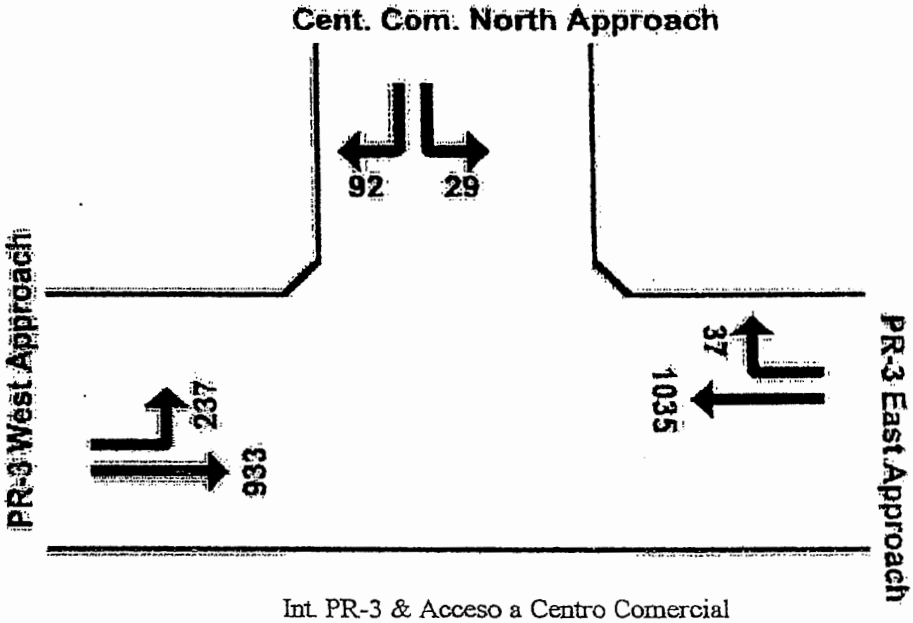

Int. PR-3 & Acceso a Centro Comercial

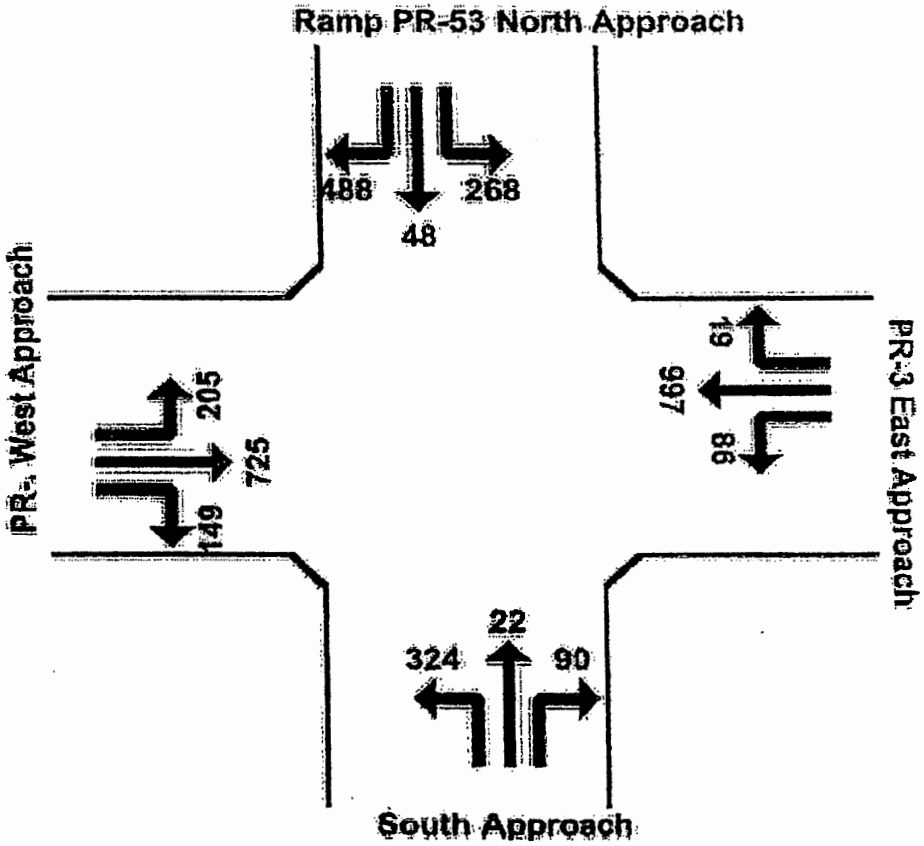

Int. PR-3, Rampa PR-53 & Acceso Villa Humacao

FJR & Asociados Ingenieros Planificadores. Saturno 2070, Urb. Apolo, guaynabo PR 00969. Tel (787) 790-3854

Figura Núm. 5

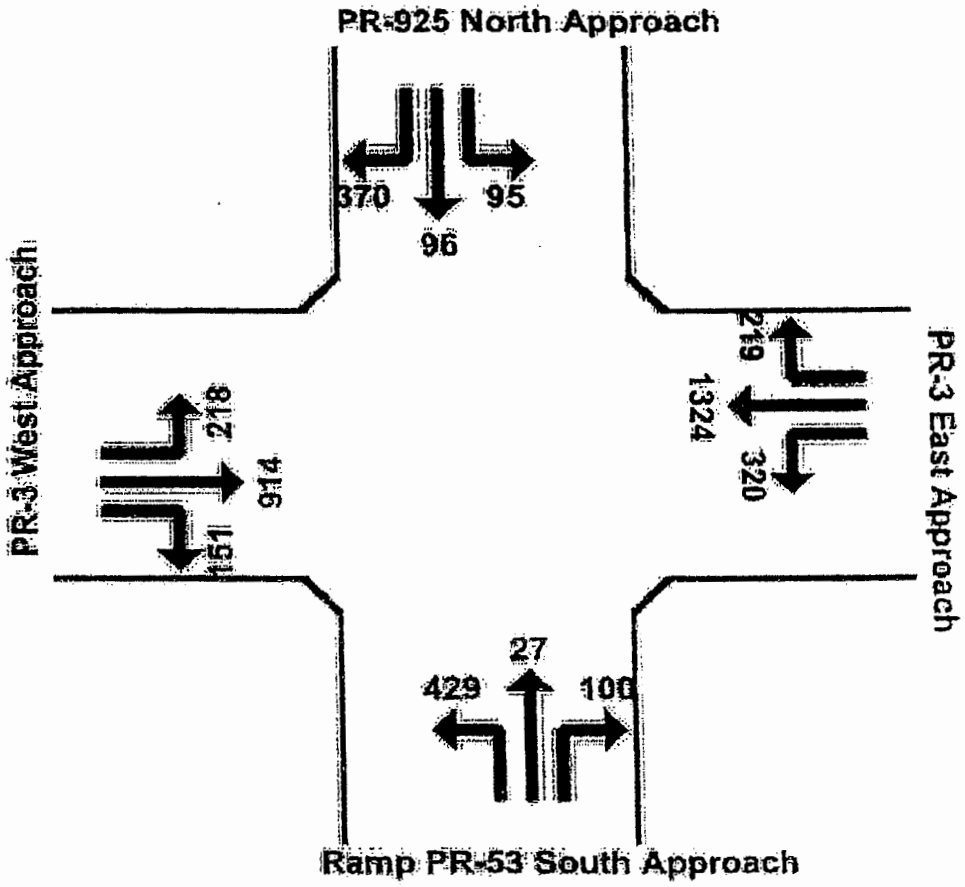

Int. PR-3, PR-925 & Rampa PR-53

Figura Núm. 5

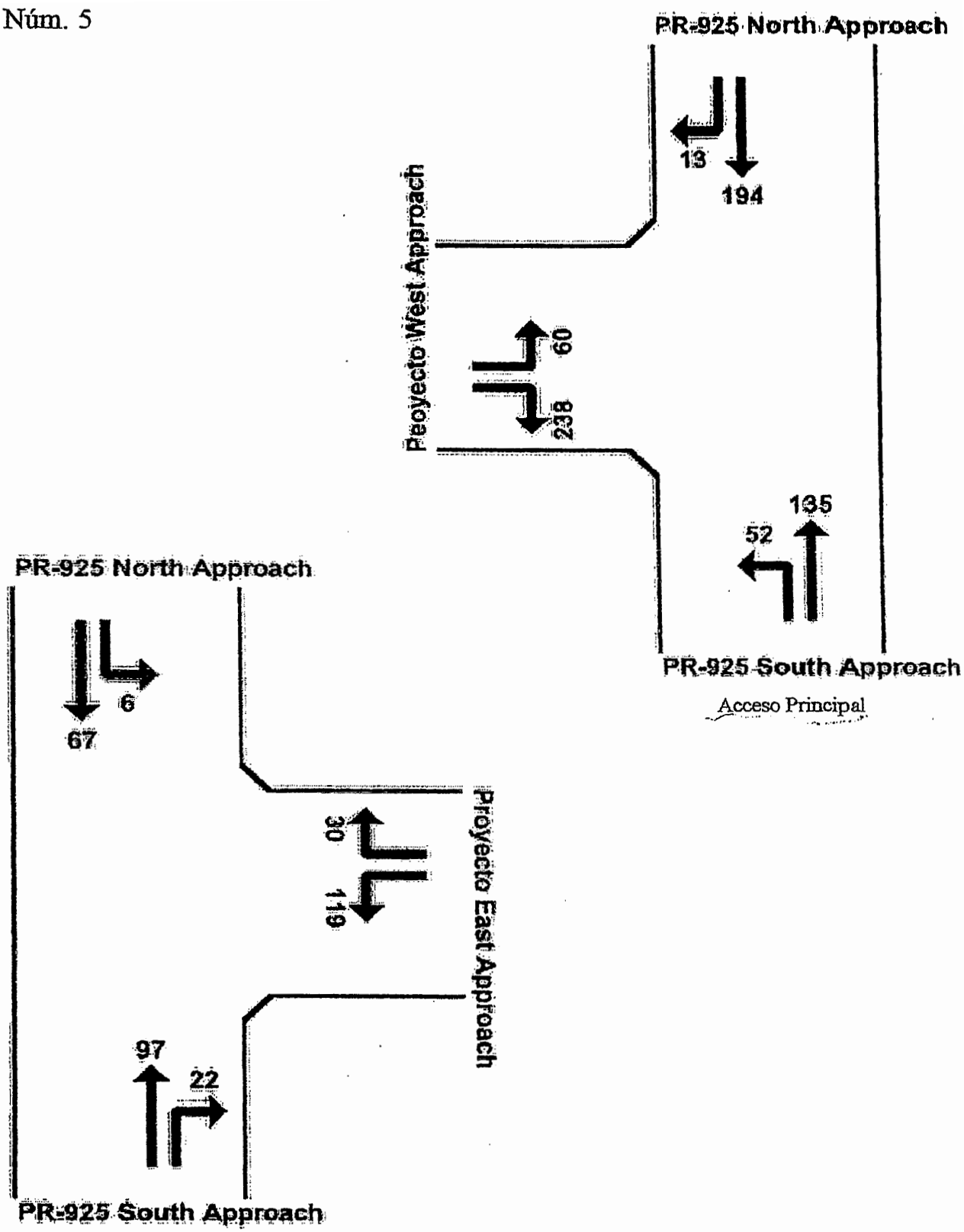
PR-925 North Approach
13
194
Proyecto West Approach
60
238
135
52
PR-925 South Approach
Acceso Principal
PR-925 North Approach
6
67
Proyecto East Approach
30
119
97
22
PR-925 South Approach
Acceso Secundario

Figura Núm. 6
Volúmenes de Tránsito de Hora Pico, PM con proyecto

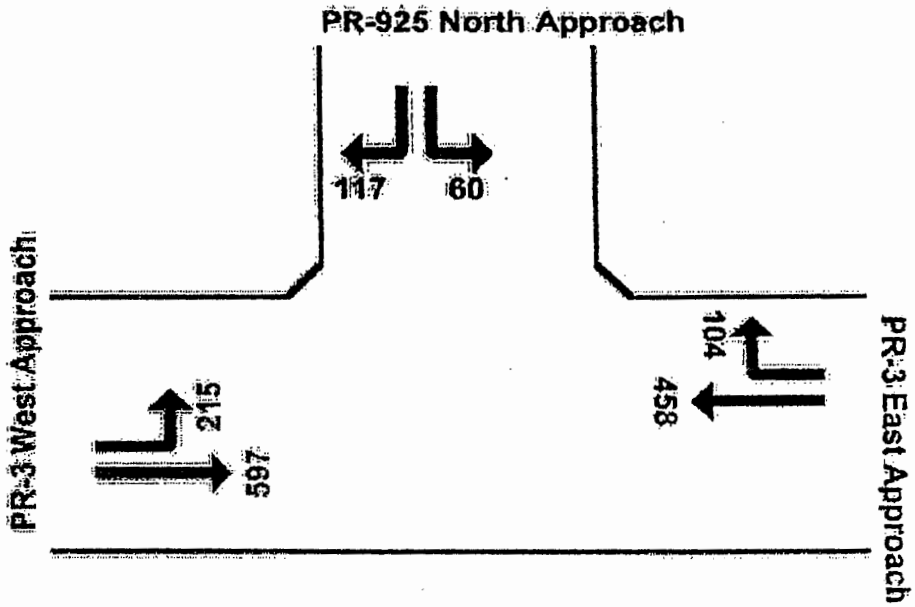

Intersección PR-925 & PR-3

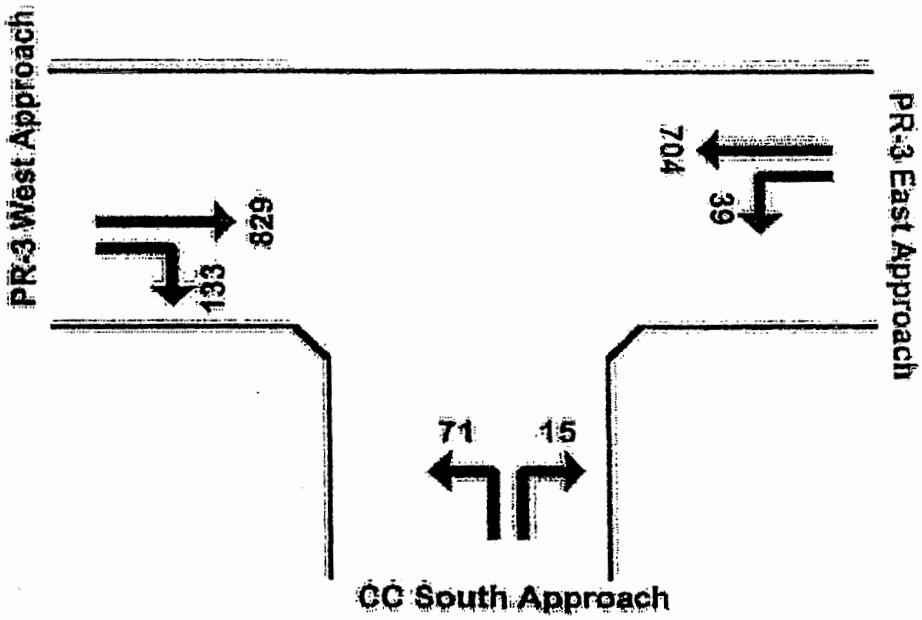

Intersección PR-3 & acceso Ciudad Cristiana

Figura Núm. 6

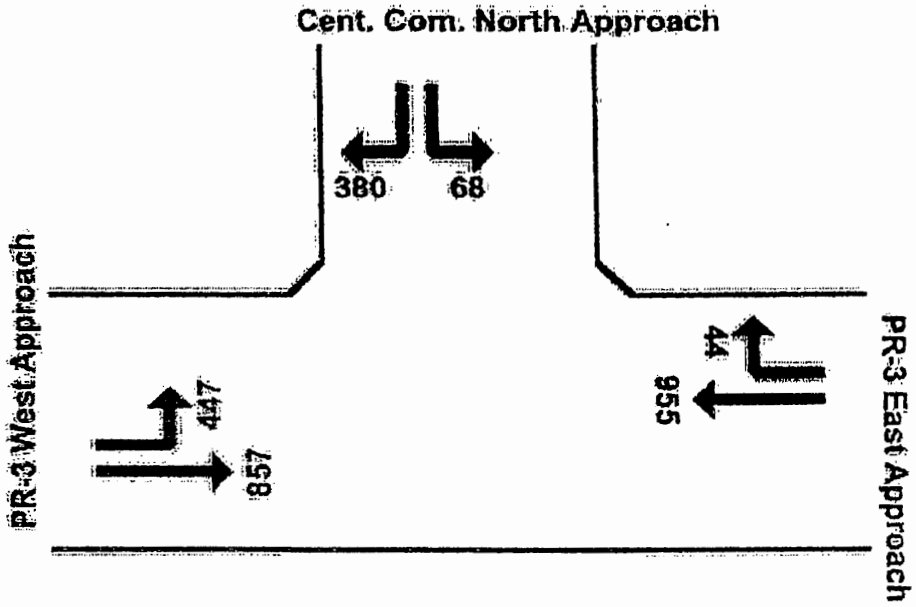

Int. PR-3 & Acceso a Centro Comercial

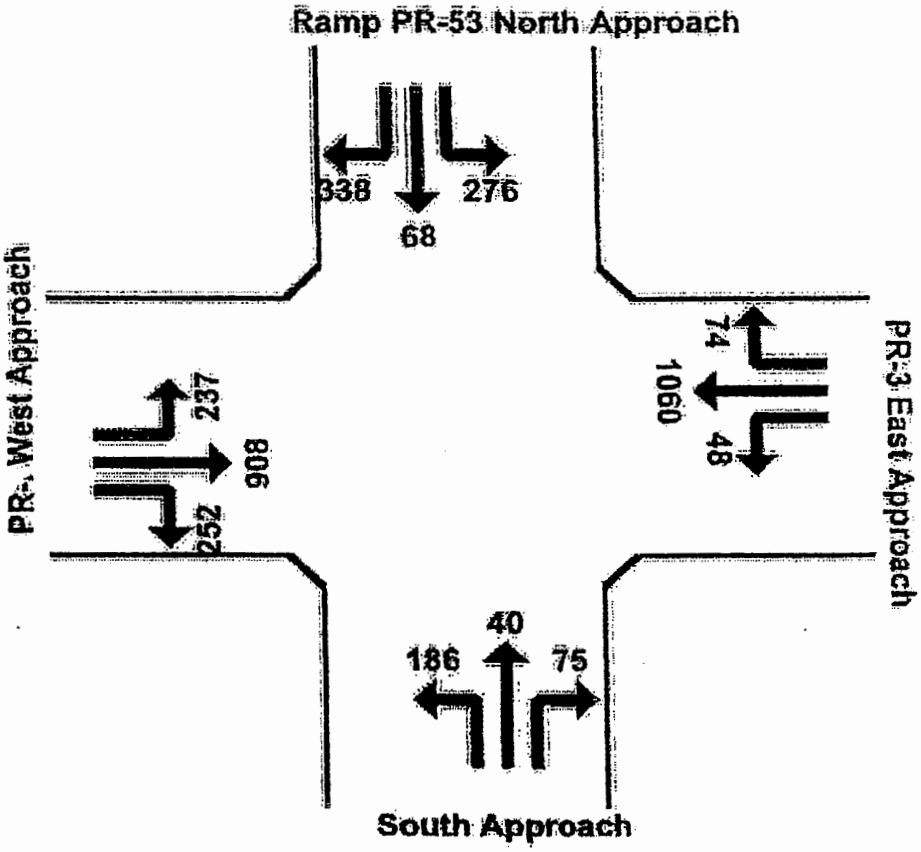

Int. PR-3, Rampa PR-53 & Acceso Villa Humacao

Figura Núm. 6

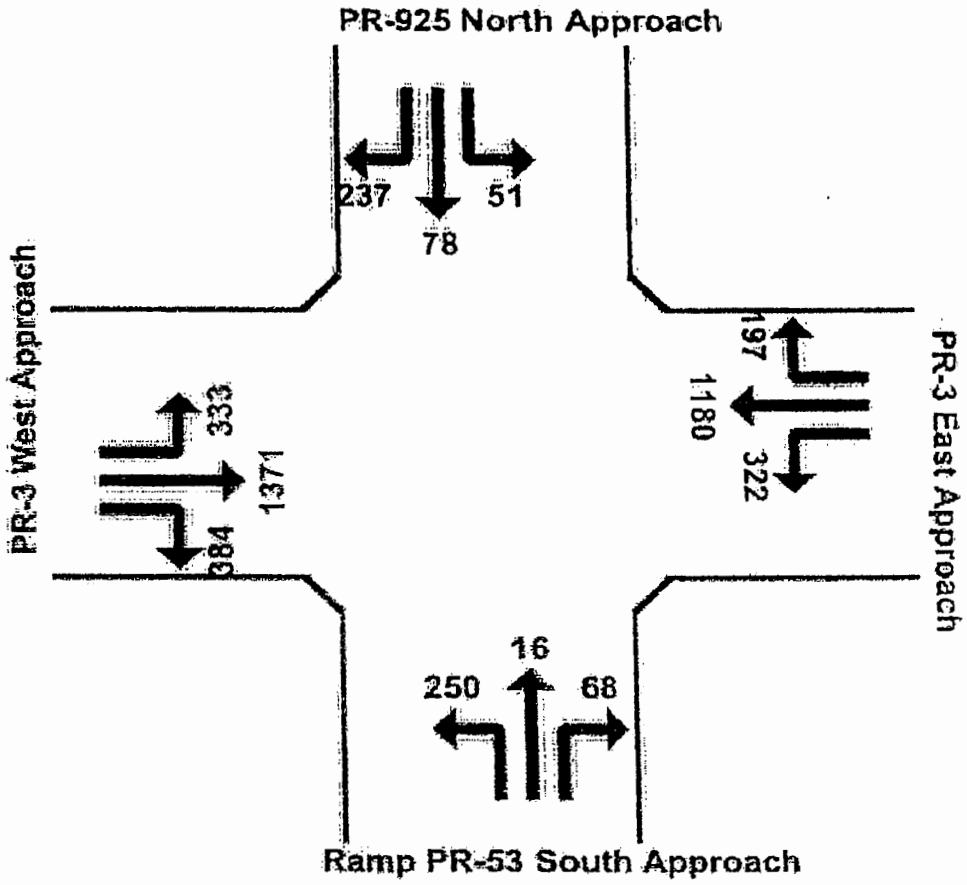

Int. PR-3, PR-925 & Rampa PR-53

Figura Núm. 6

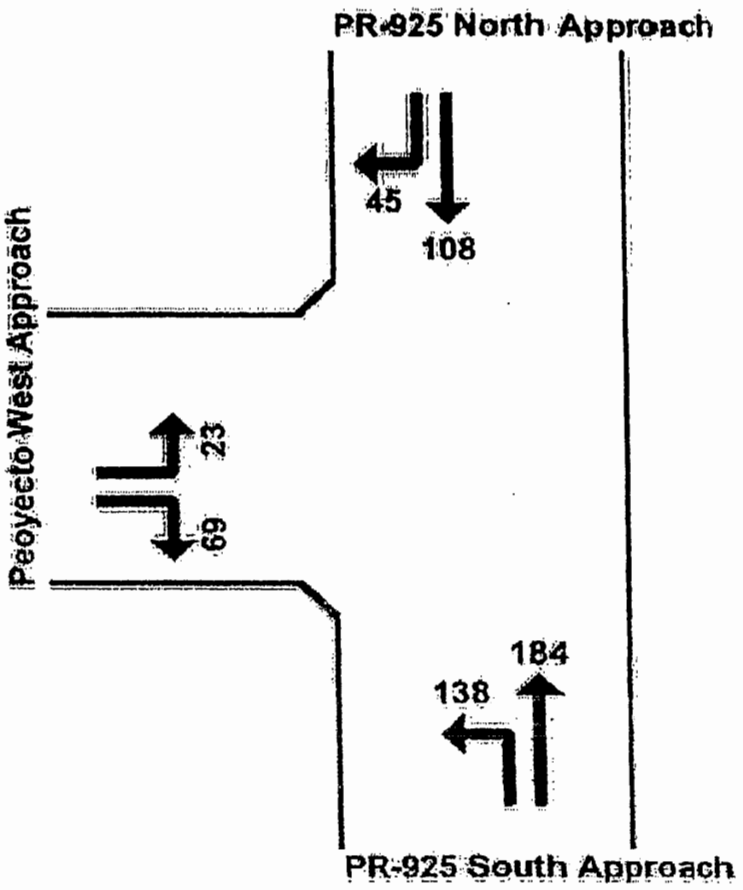

Acceso Principal

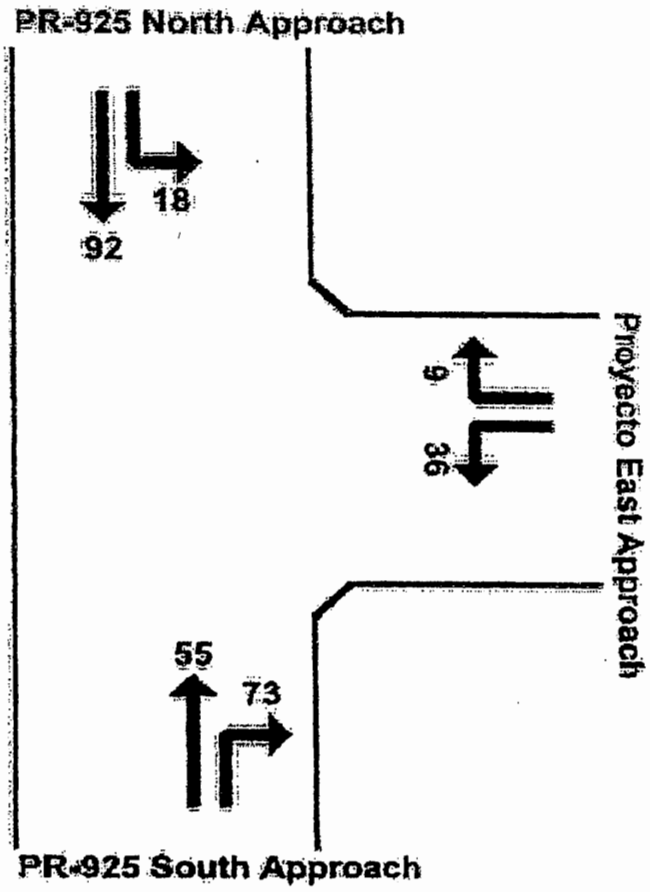

Acceso Secundario

SECCION 4.0

ANALISIS DE TRANSITO

Las condiciones de operación de una carretera o intersección esta representada por su Nivel de Servicio. Los parámetros considerados para determinar Los Niveles de Servicio son el volumen vehicular, la velocidad operacional, y la demora promedio de los vehículos. Los Niveles de Servicio se definen de la siguiente manera:

Nivel de Servicio "A": Excelente

Condición de flujo libre, con bajos volúmenes

de tránsito y altas velocidades. Los conductores tienen poca restricción para maniobrar y pueden mantener la velocidad deseada con poca demora.

Nivel de Servicio "B": Muy Bueno

Las velocidades de operación están un poco restringidas por las condiciones del tránsito. Los conductores mantienen una considerable libertad para maniobrar y mantener la velocidad deseada con poca demora.

Nivel de Servicio "C": Bueno

Volúmenes de tránsito más altos controlan las velocidades y la posibilidad de maniobrar. Los conductores tienen restricciones para cambiar de carril, rebasar y mantener la velocidad deseada. Se producen demoras de bajas magnitudes.

FJR & Asociados Ingenieros Planificadores. Saturno 2070, Urb. Apolo, guaynabo PR 00969. Tel (787) 790-3854

Nivel de Servicio "D": **Aceptable**

La condición de flujo se acerca a la inestabilidad, con velocidades tolerables mantenidas pero afectadas por los cambios operacionales del tránsito. Los conductores tienen poca libertad para maniobrar. Demoras de magnitudes aceptables.

Nivel de Servicio "E": **Capacidad**

Condición de flujo inestable, con altos volúmenes de tránsito y bajas velocidades. Los conductores tienen muy poca libertad para maniobrar y el flujo puede tener interrupciones momentáneas. Demoras considerables.

Nivel de Servicio "F": **Malo**

Condición de flujo congestionado, la velocidad operacional es muy baja causando grandes demoras.

El Nivel de Servicio de una intersección, esta dado por la demora promedio que sufren los vehículos a causa de la misma.

	Demora promedio (segundos)	
Nivel de Servicio	Sin semáforo	Con semáforo
A	< 10	< 10
B	10.1 – 15	10.1 - 20
C	15.1 – 25	20.1 - 35
D	25.1 – 35	35.1 - 55
E	35.1 – 50	55.1 - 80
F	> 50	> 80

FJR & Asociados Ingenieros Planificadores. Saturno 2070, Urb. Apolo, guaynabo PR 00969. Tel (787) 790-3854

Para evaluar el funcionamiento de la intersecciones afectadas se utilizó el programa "Signalized and Unsignalized Design and Research Aid" (aaSIDRA 2.0). En el análisis se modelaron las intersecciones para las condiciones existentes y proyectadas (ver anejos 3 y 4).

La Tabla Núm. 2 resume los resultados arrojados por los análisis de tránsito.

Tabla Núm. 2
Resultados Análisis de Tránsito

Intersecciones	Hora Pico	Demora Promedio Existente [s]	Demora Promedio Proyectada [s]	Nivel de Servicio Existente	Nivel de Servicio Proyectado
PR-3, PR-925 & Rampa oeste de PR-53	AM	65.0	75.6	E	E
	PM	103.9	122.7	F	F
PR-3 & Rampa oeste de PR-53	AM	67.9	76.6	E	E
	AM	49.3	54.2	D	D
PR-3 & Acceso a Centro Comercial	AM	19.2	18.5	B	B
	PM	19.2	20.4	B	C
PR-3 & Acceso a Ciudad Cristiana	AM	27.7	27.0	D	D
	PM	13.2	13.7	B	B
PR-3 & PR-925	AM	13.7	15.7	B	C
	PM	5.7	3.9	A	A
PR-925 & Acceso Principal al Desarrollo	AM	NA	6.2	NA	A
	PM	NA	5.0	NA	A
PR-925 & Acceso secundario al Desarrollo	AM	NA	5.6	NA	A
	PM	NA	4.8	NA	A

Las figuras 7 y 8 muestran los Niveles de Servicios actuales de las intersecciones durante las Horas Pico AM y PM respectivamente.

Las figuras 9 y 10 muestran los Niveles de Servicio proyectados de las intersecciones durante las Horas Pico AM y PM respectivamente.

FJR & Asociados Ingenieros Planificadores. Saturno 2070, Urb. Apolo, guaynabo PR 00969. Tel (787) 790-3854

Figura Núm. 7
Niveles de Servicio. Hora Pico AM actuales

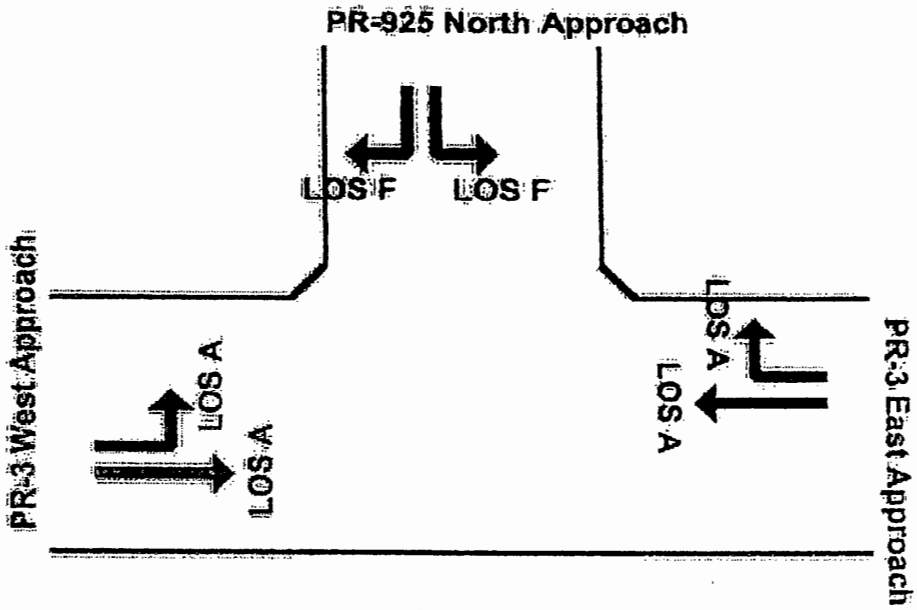

Intersección PR-925 & PR-3

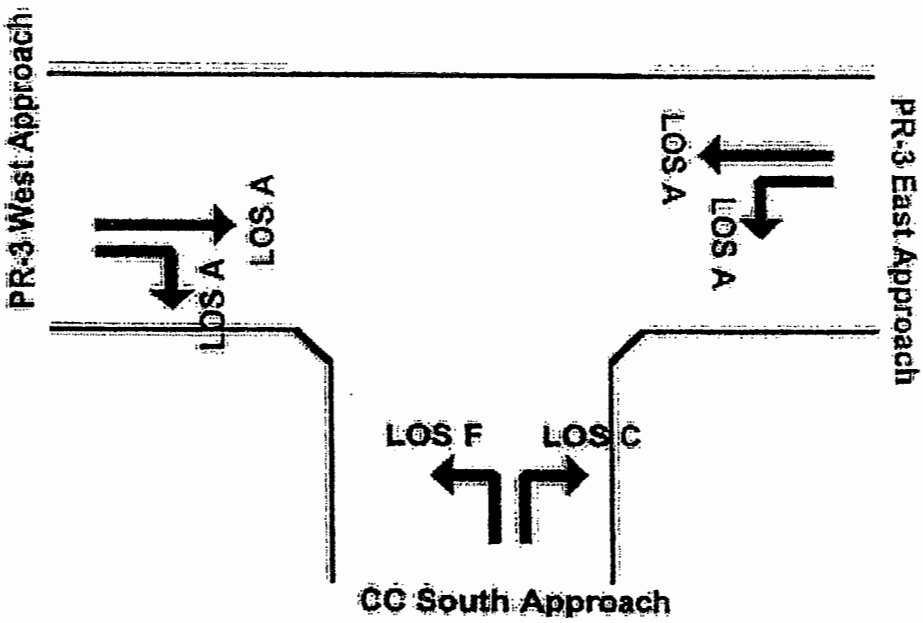

Intersección PR-3 & acceso Ciudad Cristiana

Figura Núm. 7

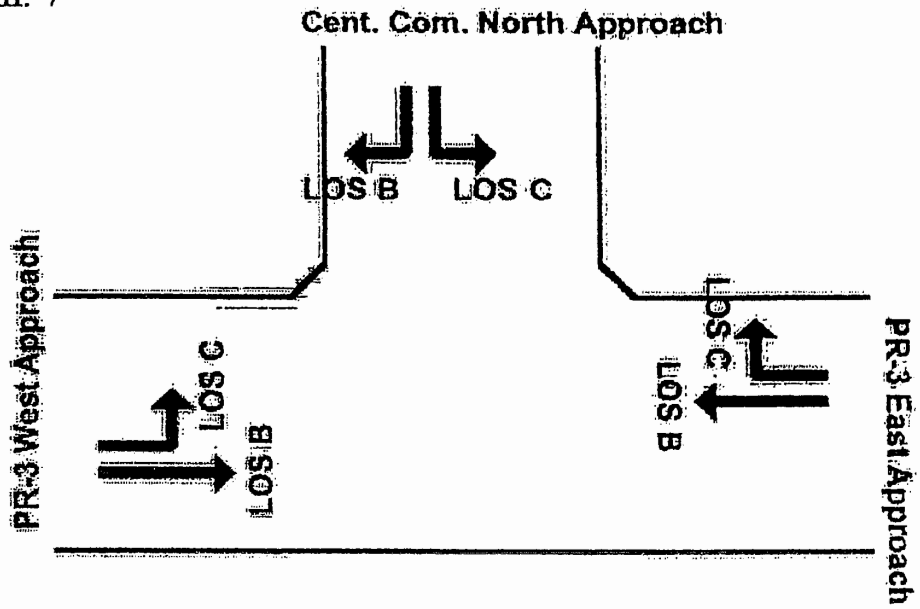

Int. PR-3 & Acceso a Centro Comercial

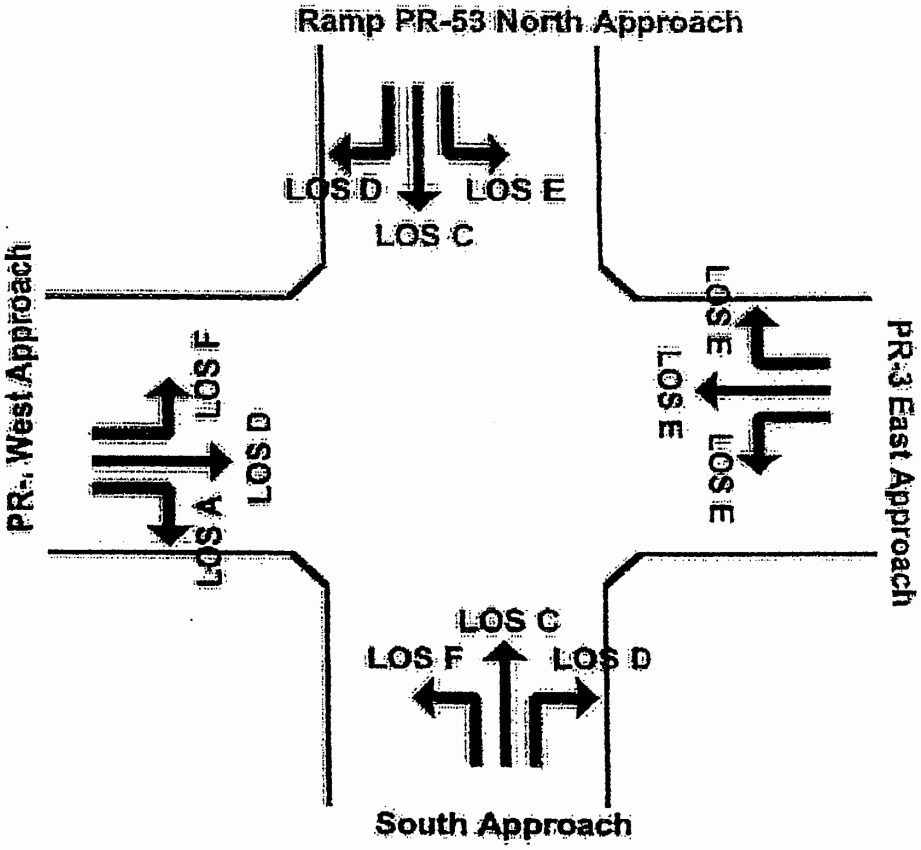

Int. PR-3, Rampa PR-53 & Acceso Villa Humacao

Figura Núm. 7

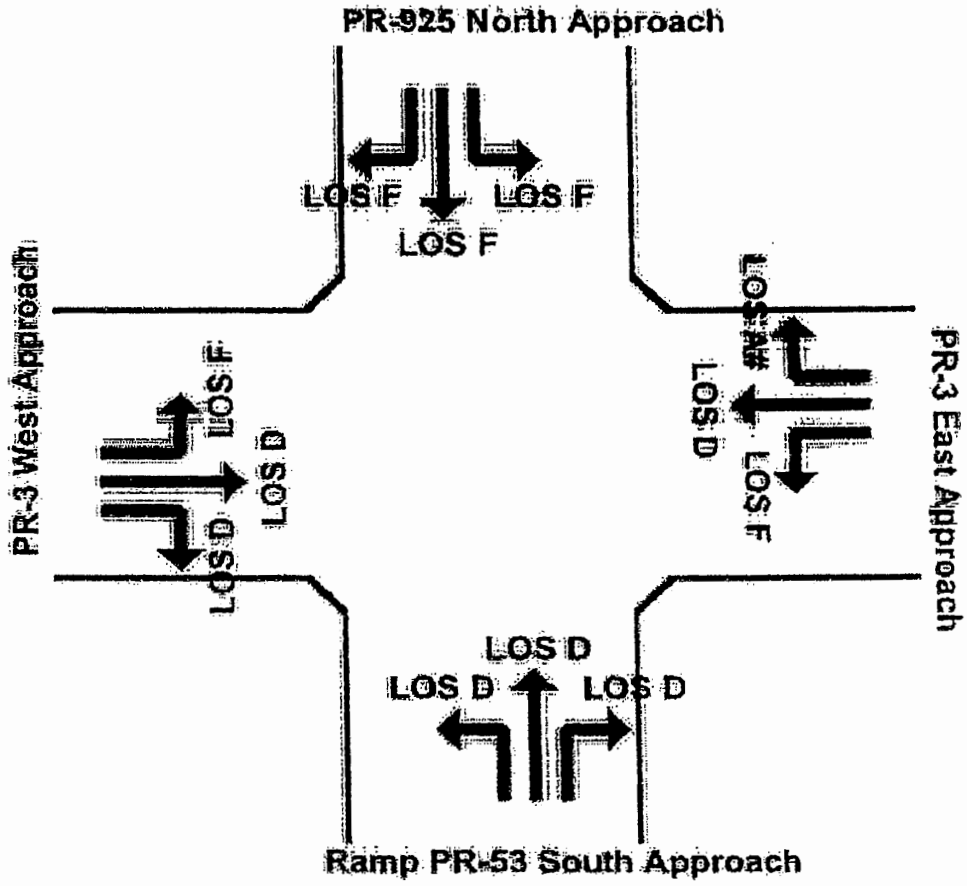

Int. PR-3, PR-925 & Rampa PR-53

Figura Núm. 8
Niveles de Servicio. Hora Pico PM actuales

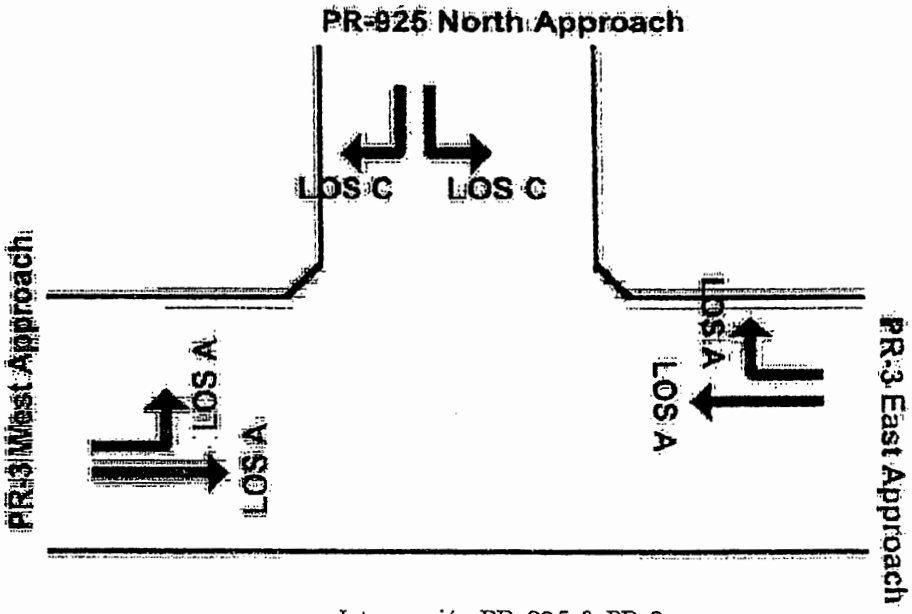

Intersección PR-925 & PR-3

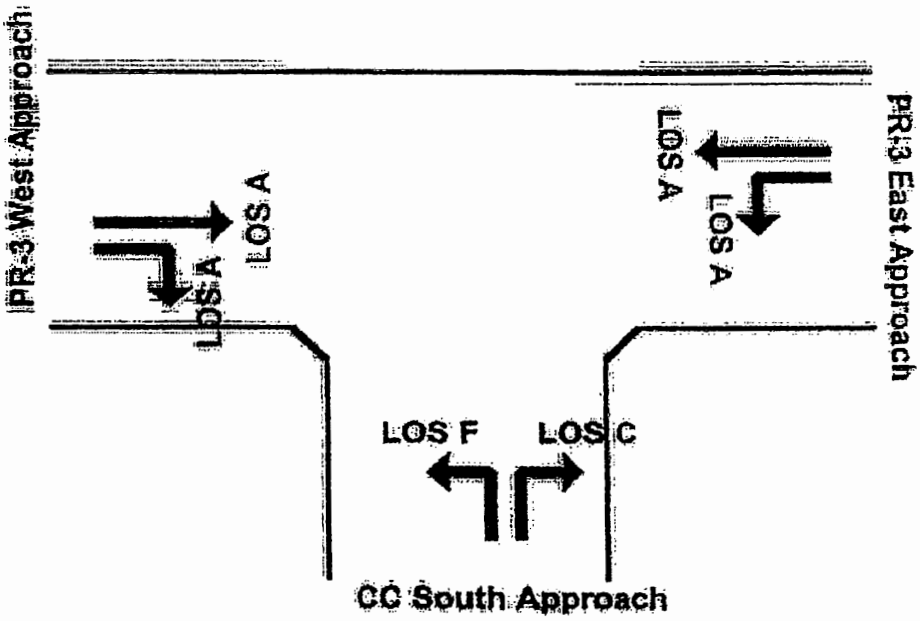

Intersección PR-3 & acceso Ciudad Cristiana

Figura Núm. 8

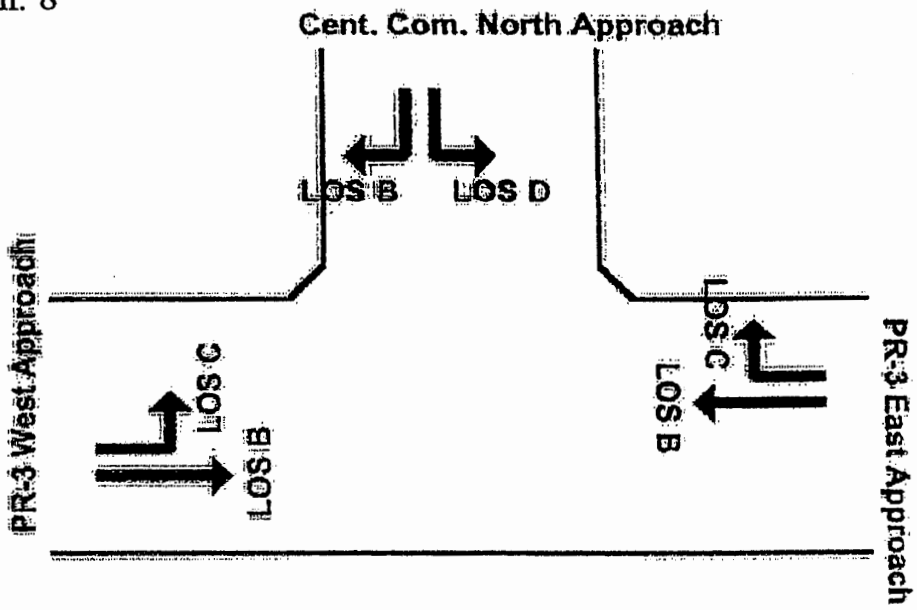

Int. PR-3 & Acceso a Centro Comercial

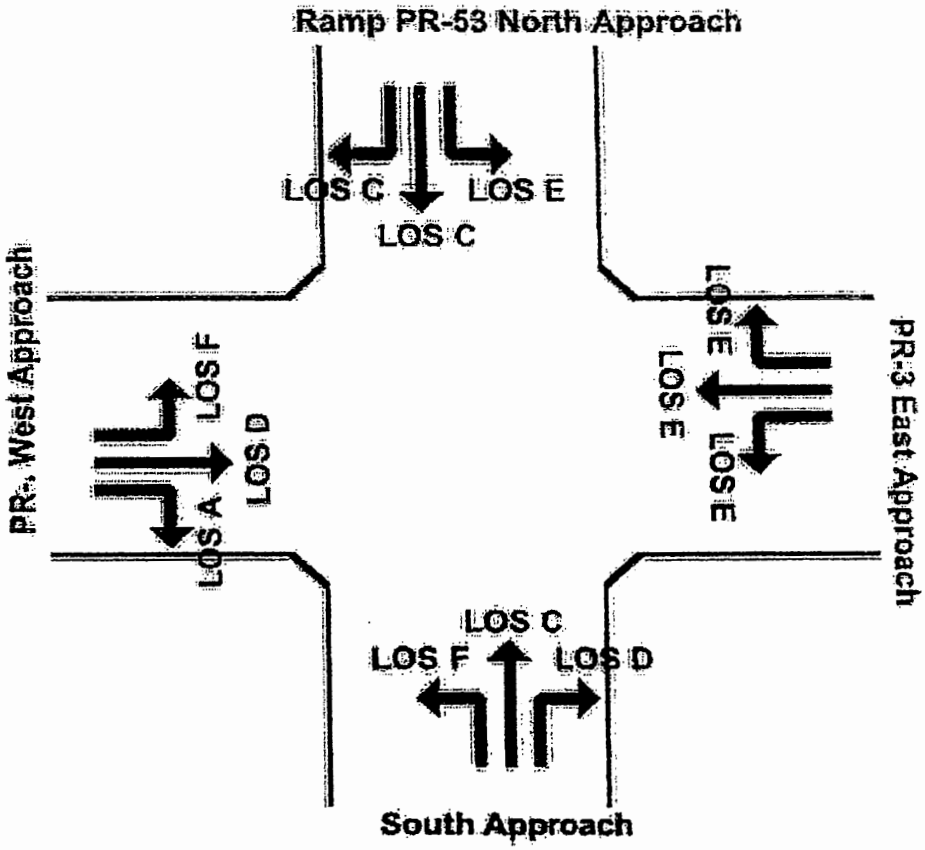

Int. PR-3, Rampa PR-53 & Acceso Villa Humacao

Figura Núm. 8

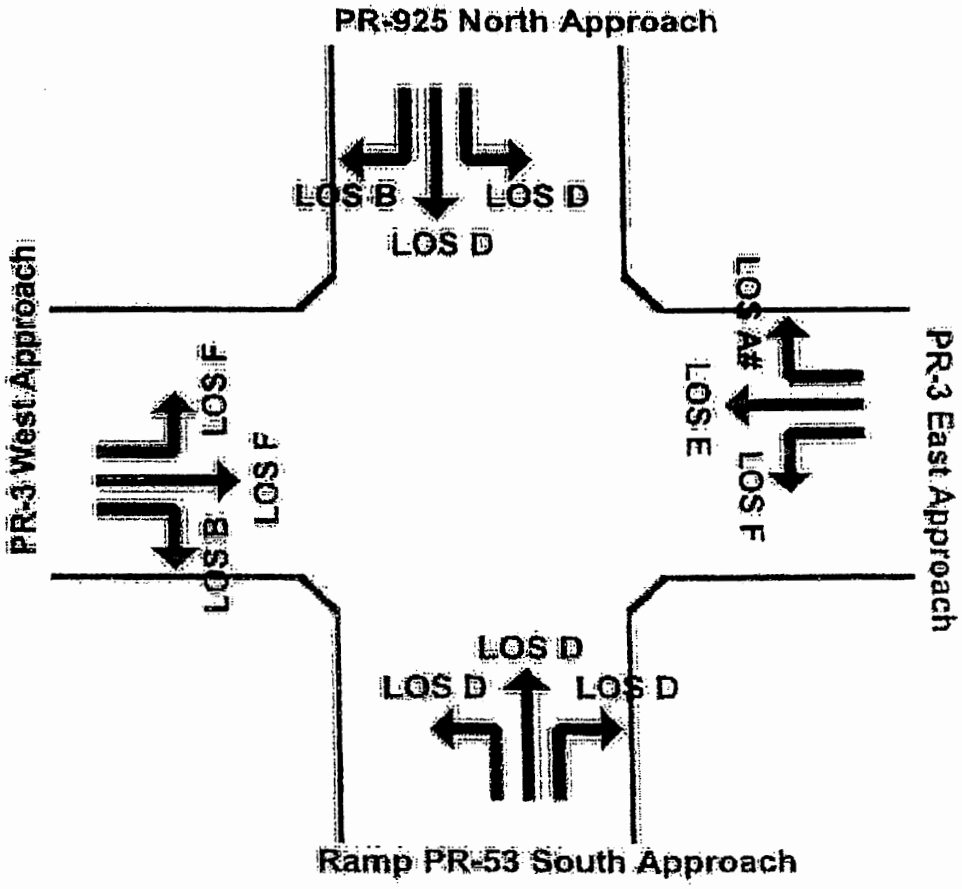

Int. PR-3, PR-925 & Rampa PR-53

Figura Núm. 9
Niveles de Servicio. Hora Pico AM con proyecto

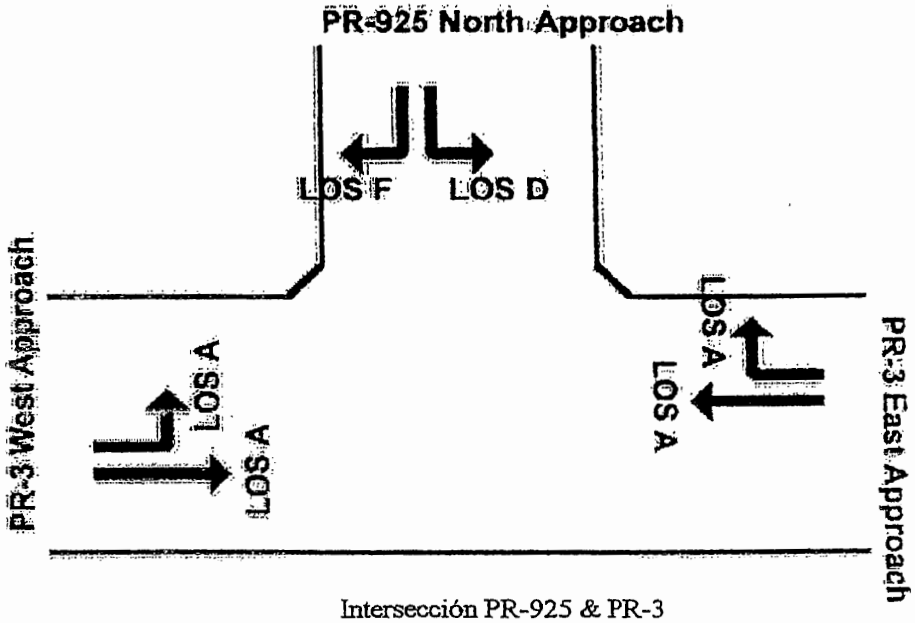

Intersección PR-925 & PR-3

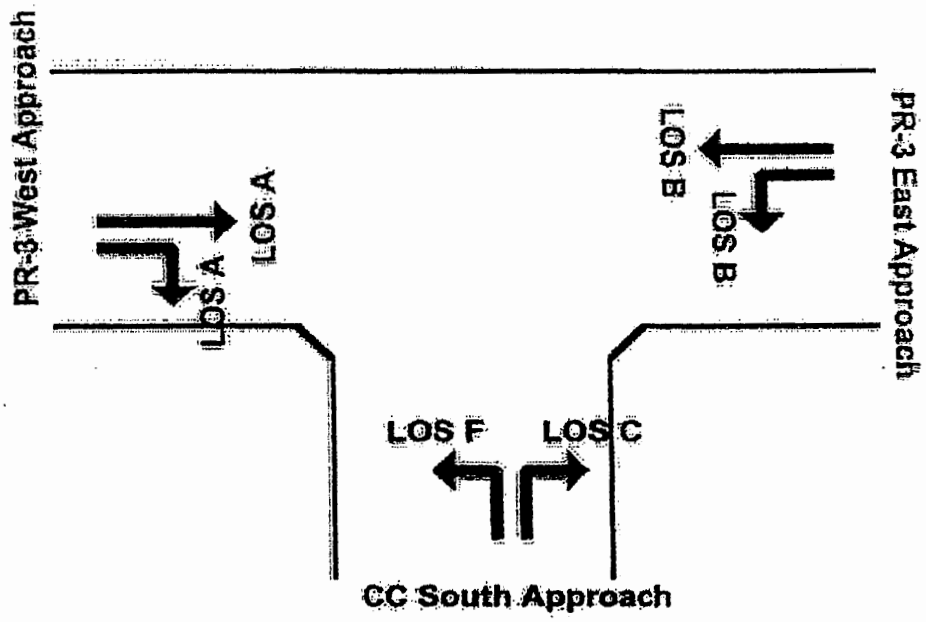

Intersección PR-3 & acceso Ciudad Cristiana

Figura Núm. 9

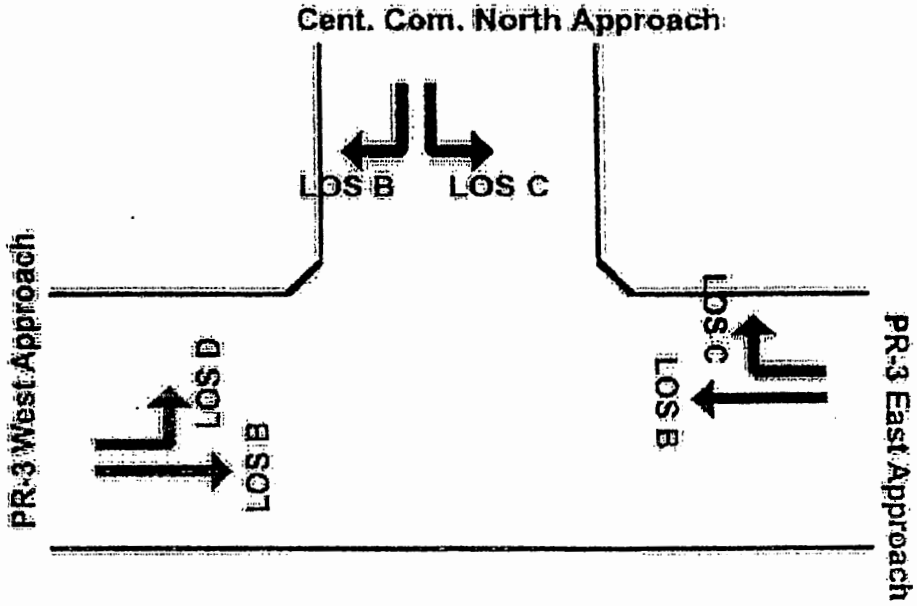

Int. PR-3 & Acceso a Centro Comercial

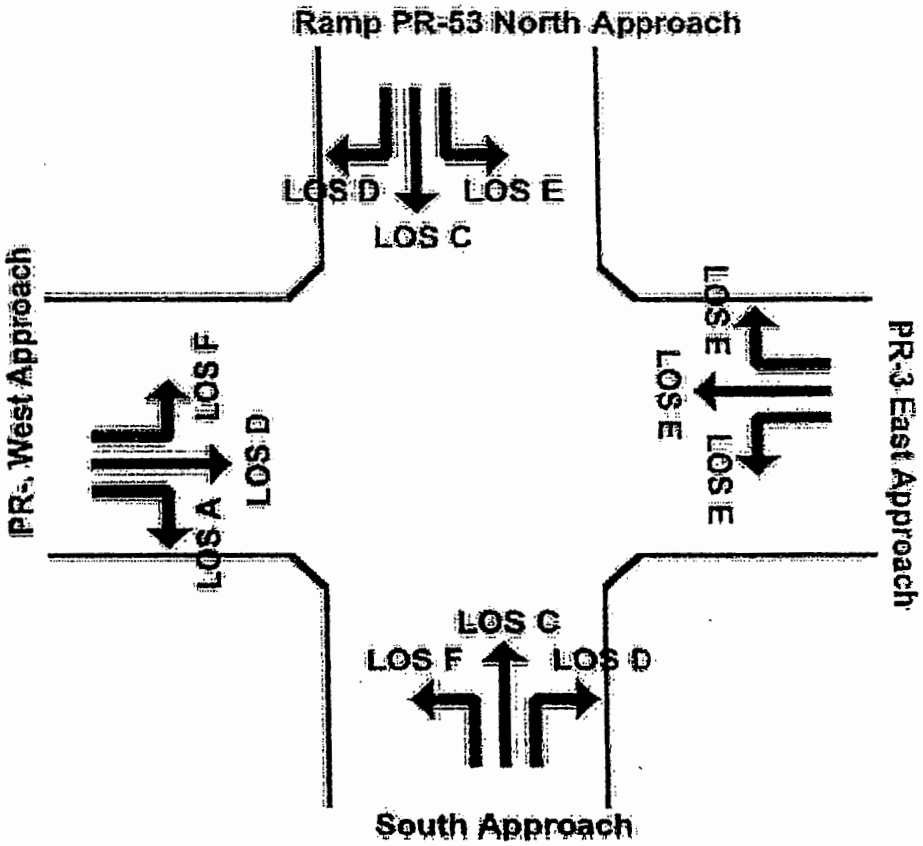

Int. PR-3, Rampa PR-53 & Acceso Villa Humacao

Figura Núm. 9

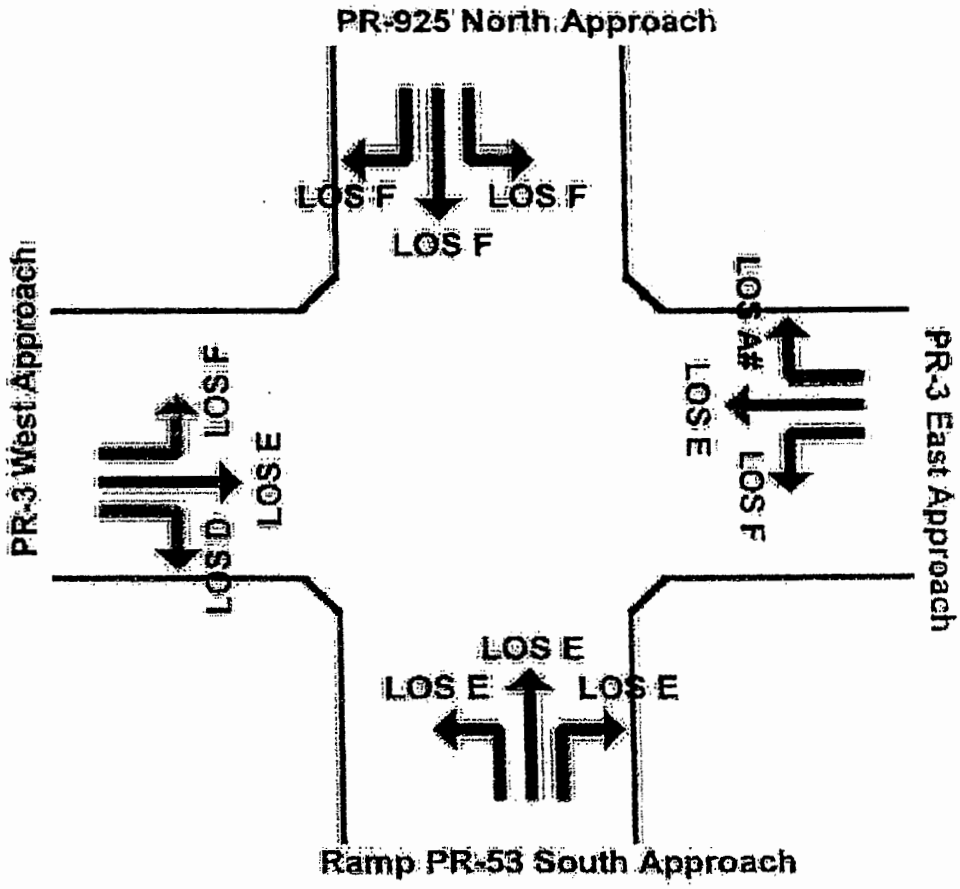

Int. PR-3, PR-925 & Rampa PR-53

Figura Núm. 9

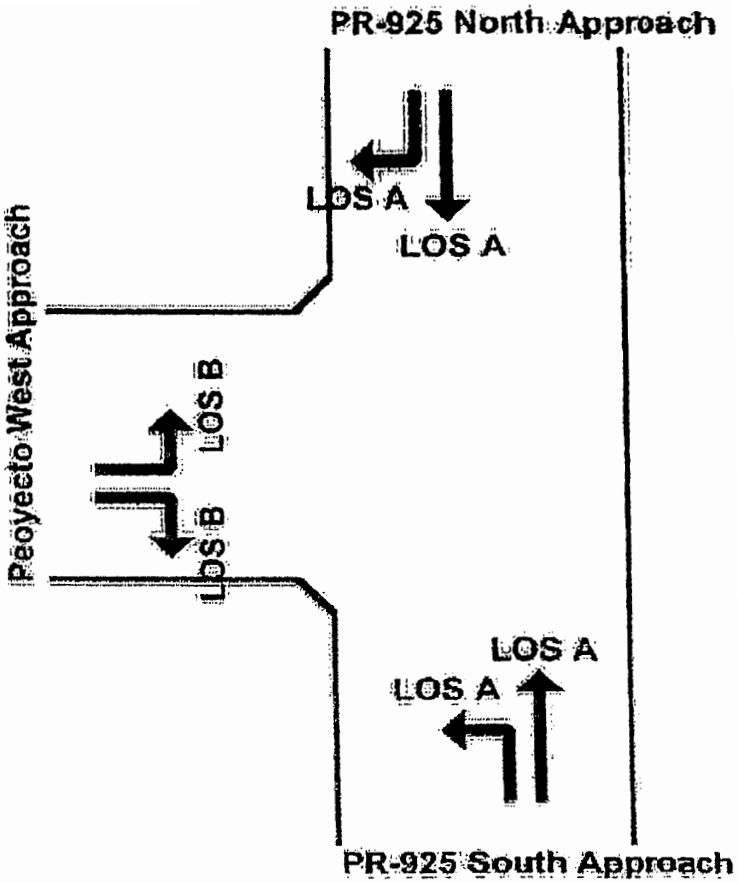

Acceso Principal

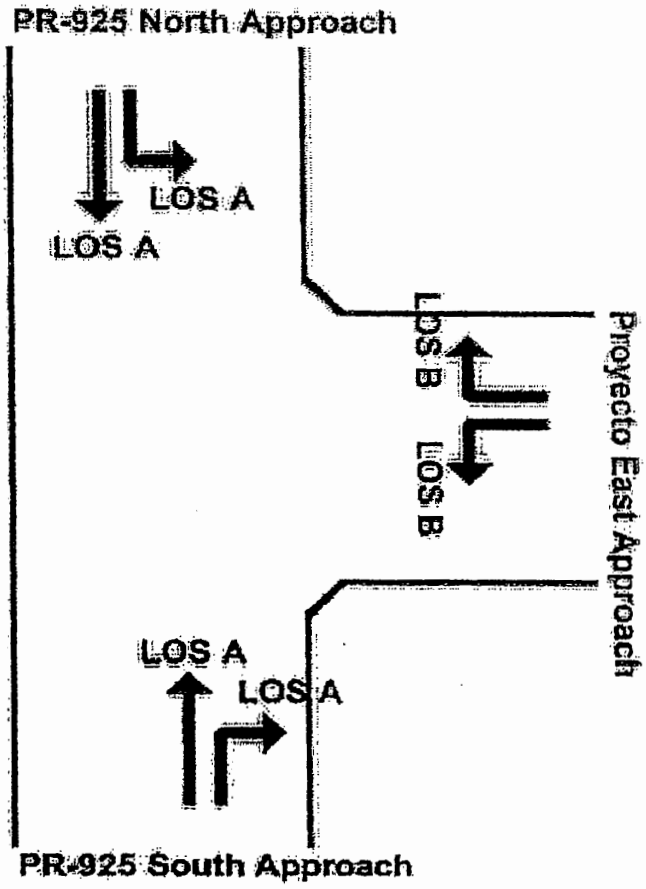

Acceso Secundario

Figura Núm. 10
Niveles de Servicio. Hora Pico PM con proyecto

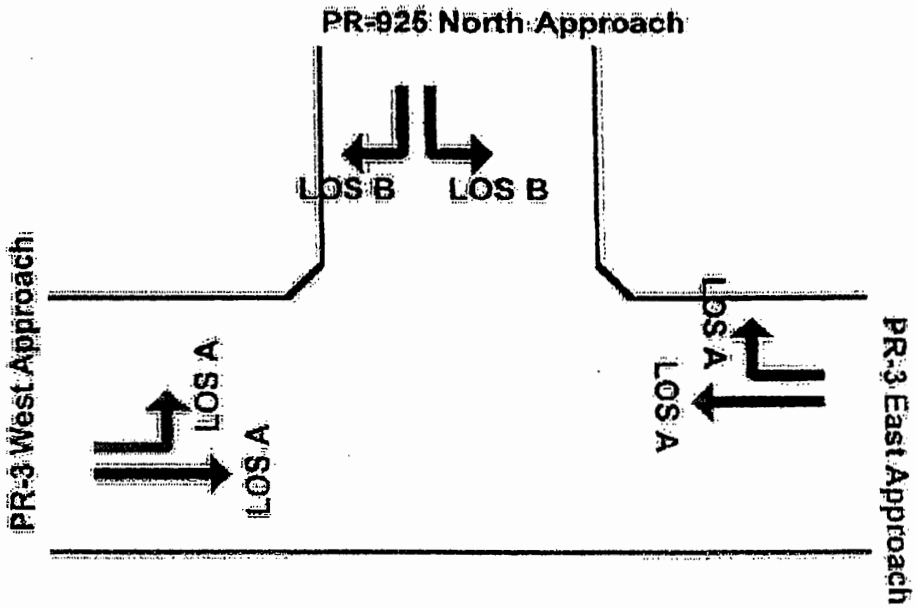

Intersección PR-925 & PR-3

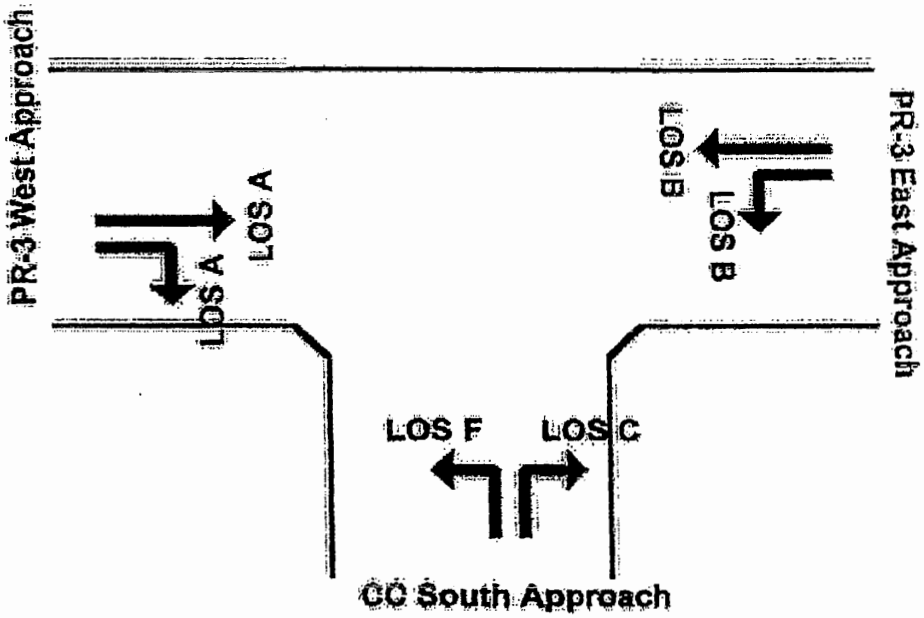

Intersección PR-3 & acceso Ciudad Cristiana

Figura Núm. 10

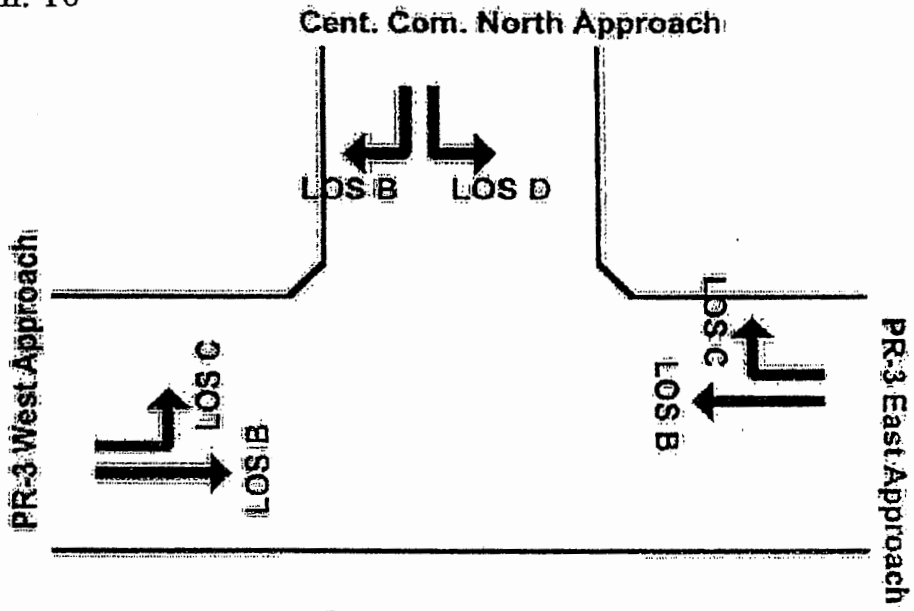

Int. PR-3 & Acceso a Centro Comercial

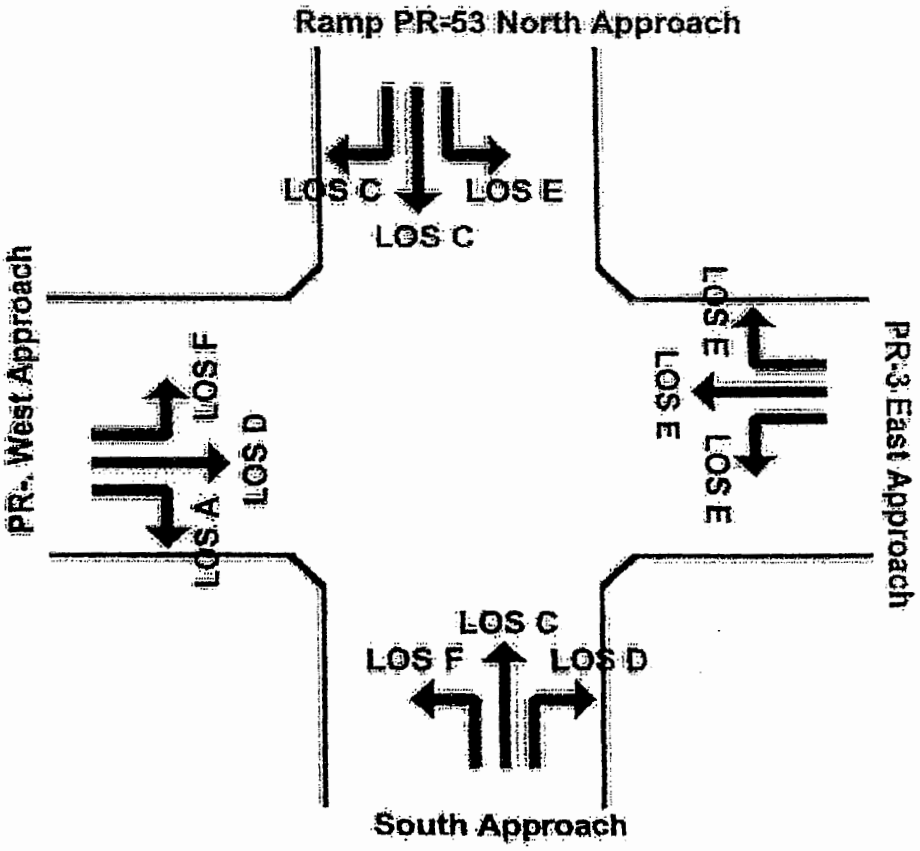

Int. PR-3, Rampa PR-53 & Acceso Villa Humacao

Figura Núm. 10

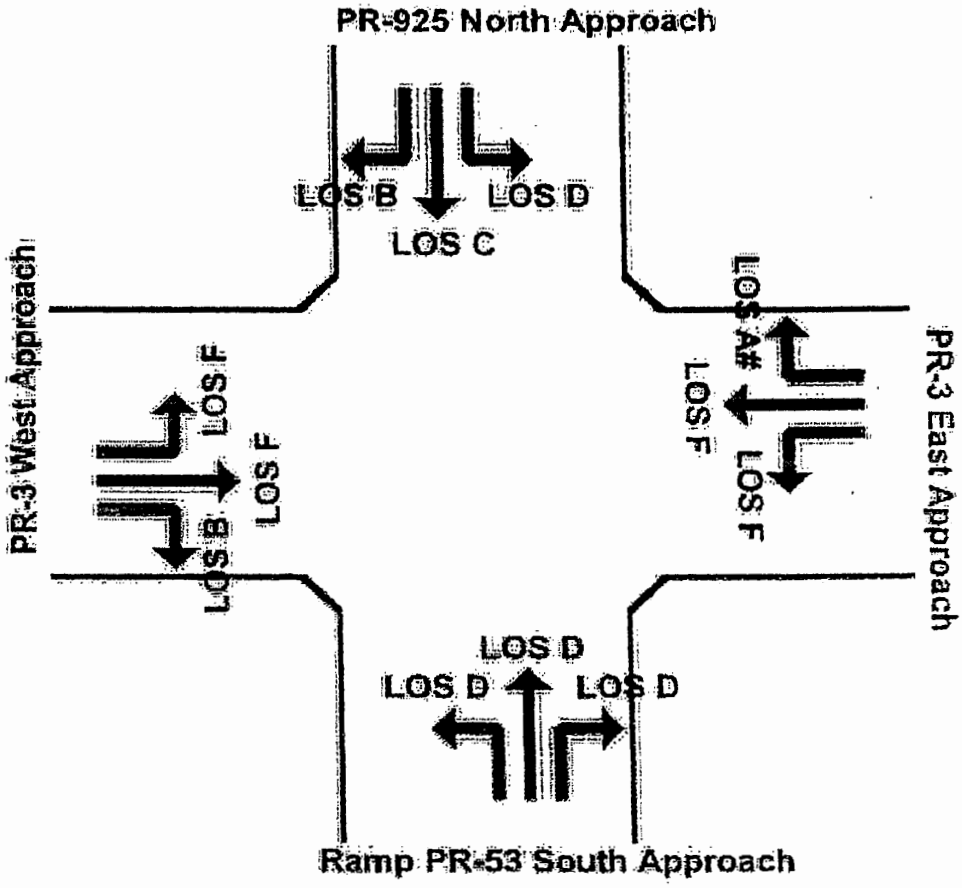

Int. PR-3, PR-925 & Rampa PR-53

Figura Núm. 10

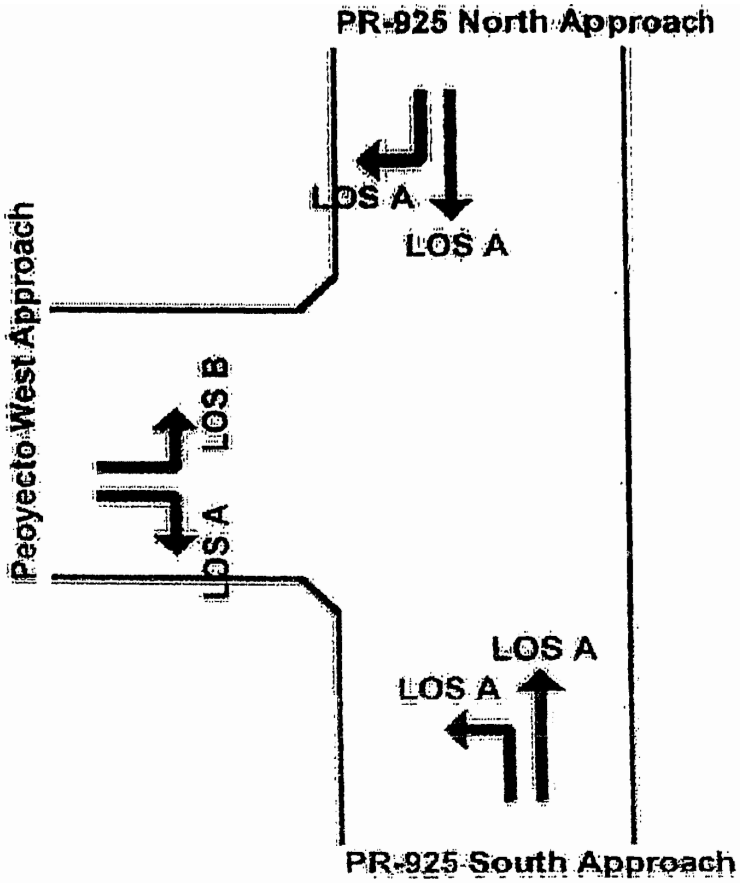

Acceso Principal

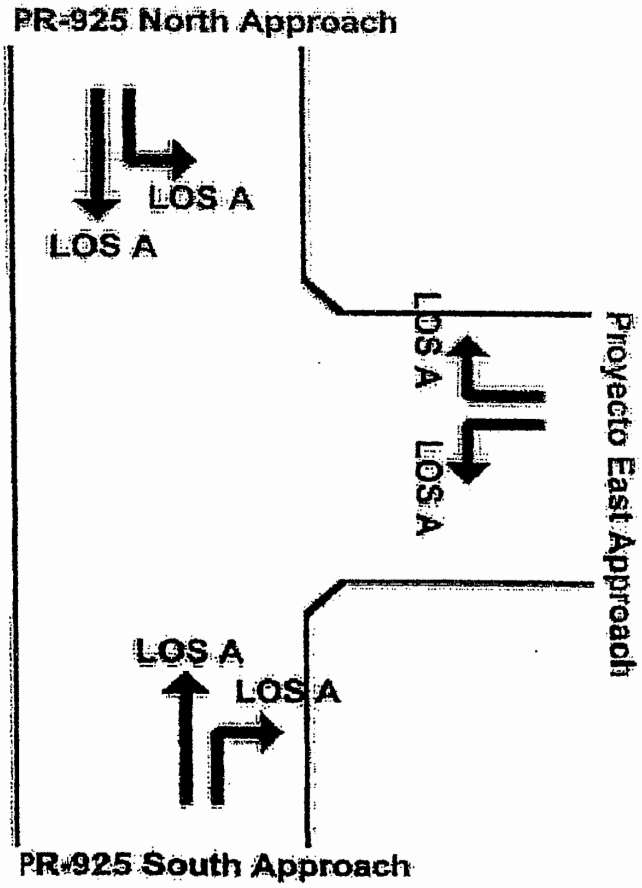

Acceso Secundario

SECCION 5.0

CONCLUSIONES

Basándonos en los resultados obtenidos de este estudio se puede llegar a las siguientes conclusiones:

1- El tránsito que generará el proyecto propuesto, no impactará de forma significativa el funcionamiento de las carreteras estatales PR-3 & PR-925.

2- Las vías e intersecciones estudiadas mantendrán niveles de servicio similares a los actuales, a excepción de la intersección de las carreteras PR-3 & PR-925 a la cual deberán realizárseles mejoras para mitigar el impacto del desarrollo propuesto.

3- El aumento en las demoras de la carretera PR-3 a causa del tránsito generado por el proyecto propuesto no es significativo.

4- La intersecciones propuestas de acceso al desarrollo son apropiadas ya que las mismas funcionarán a Niveles de Servicio "A" durante las horas pico AM y PM.

Por lo tanto el desarrollo propuesto no tendrá impacto significativo en el tránsito vehícular del área y recomendamos la construcción de los accesos al proyecto según propuestos y las mejoras propuestas a la intersección de las carreteras PR-3 & PR-925.

Francisco Reyes
Planificador Urbano
Licencia Núm. 336

ANEJO 1
CONTEOS DE TRANSITO

CONTEO VEHICULAR (HORAS PICOS)
PR-3 & PR-925

FECHA: 16-Feb-05
INTERSECCION: PR-3, Rampa PR-53 & PR-925
NOMBRE: F.REYES

	ACCESO NORTE						ACCESO ESTE						ACCESO SUR						ACCESO OESTE									
	IZQUIERDA		RECTO		DERECHA		IZQUIERDA		RECTO		DERECHA		IZQUIERDA		RECTO		DERECHA		IZQUIERDA		RECTO		DERECHA		SUMATORIA 15 MINUTOS		SUMATORIA 1 HORA	
HORA A.M.	LIVIANOS	PESADOS	LIVIANOS	PESADOS	LIVIANOS	PESADOS	LIVIANOS	PESADOS	LIVIANOS	PESADOS	LIVIANOS	PESADOS	LIVIANOS	PESADOS	LIVIANOS	PESADOS	LIVIANOS	PESADOS	LIVIANOS	PESADOS	LIVIANOS	PESADOS	LIVIANOS	PESADOS	LIVIANOS	PESADOS	LIVIANOS	PESADOS
6:00 - 6:15	8	0	6	1	38	1	28	0	108	1	15	1	29	1	1	0	15	0	25	3	115	2	15	0	358	10		
6:15 - 6:30	6	1	2	0	38	0	26	0	136	0	12	1	46	0	2	0	18	0	23	1	131	2	15	1	456	8		
6:30 - 6:45	12	0	14	0	48	0	55	2	190	2	26	1	31	0	6	1	15	0	135	0	172	6	14	0	713	12		
6:45 - 7:00	21	0	12	0	60	0	58	2	227	2	40	2	55	0	3	0	30	2	37	2	177	5	15	1	723	16	2289	44
7:00 - 7:15	17	0	19	0	65	0	50	2	240	3	40	3	69	0	5	1	18	0	36	0	159	4	25	0	773	13	2664	47
7:15 - 7:30	16	0	21	0	68	0	60	1	286	4	50	1	82	1	3	1	21	1	37	2	173	6	37	0	871	17	3080	58
7:30 - 7:45	21	0	16	0	86	2	63	2	316	5	63	1	132	3	6	0	20	1	54	1	246	14	43	0	1095	29	3462	75
7:45 - 8:00	18	0	22	0	78	1	70	3	335	8	65	2	126	1	10	0	29	1	69	1	217	10	32	0	1050	27	3789	86
8:00 - 8:15	21	0	16	0	58	2	60	2	250	5	35	1	63	2	5	0	24	1	40	1	220	8	38	1	840	24	3656	97
8:15 - 8:30	11	0	3	1	50	3	40	1	240	9	30	2	78	2	7	0	16	0	45	0	204	11	25	1	747	30	3732	110
8:30 - 8:45	9	0	7	1	39	0	46	1	242	6	25	2	64	0	3	0	20	0	34	1	219	6	36	1	740	18	3377	99
8:45 - 9:00	8	0	6	0	51	1	37	2	204	4	15	1	77	0	0	0	22	1	38	2	176	7	27	1	663	18	2990	91
HORA PICO 7:15-8:15	75	0	76	0	286	5	283	8	1187	23	203	5	422	7	24	1	94	4	200	5	856	38	150	1	TOTAL HORA PICO		3856	97
																											FHP=	0.85

	ACCESO NORTE						ACCESO ESTE						ACCESO SUR						ACCESO OESTE									
	IZQUIERDA		RECTO		DERECHA		IZQUIERDA		RECTO		DERECHA		IZQUIERDA		RECTO		DERECHA		IZQUIERDA		RECTO		DERECHA		SUMATORIA 15 MIN.		SUMATORIA 1 HORA	
HORA P.M.	LIVIANOS	PESADOS	LIVIANOS	PESADOS	LIVIANOS	PESADOS	LIVIANOS	PESADOS	LIVIANOS	PESADOS	LIVIANOS	PESADOS	LIVIANOS	PESADOS	LIVIANOS	PESADOS	LIVIANOS	PESADOS	LIVIANOS	PESADOS	LIVIANOS	PESADOS	LIVIANOS	PESADOS	LIVIANOS	PESADOS	LIVIANOS	PESADOS
3:00 - 3:15	7	0	15	0	61	1	63	3	213	5	39	0	67	1	3	0	17	0	53	3	298	3	75	1	901	17		
3:15 - 3:30	13	0	16	1	58	1	67	6	260	6	45	1	71	1	3	0	20	1	56	6	300	3	77	5	1006	22		
3:30 - 3:45	11	0	23	0	43	1	120	1	330	2	45	0	79	0	3	0	13	1	60	10	357	7	91	1	1195	23		
3:45 - 4:00	6	0	11	1	47	1	60	2	260	6	40	0	60	0	2	0	14	1	66	2	294	4	102	1	952	18	4054	98
4:00 - 4:15	13	2	18	1	58	0	65	2	270	1	41	0	46	1	4	0	15	0	60	7	346	1	105	2	1032	17	4165	99
4:15 - 4:30	13	1	17	0	39	0	60	1	260	1	46	0	59	1	3	0	19	1	69	2	304	4	67	0	996	11	4164	89
4:30 - 4:45	22	0	19	1	50	0	55	1	270	6	30	0	56	1	2	0	23	2	73	0	305	2	80	0	1025	13	3994	59
4:45 - 5:00	16	0	18	0	42	0	65	1	280	2	56	1	52	3	1	0	17	0	65	3	332	6	102	0	1077	16	4119	57
5:00 - 5:15	23	0	26	1	60	0	110	4	234	6	41	0	53	0	2	0	22	0	74	1	307	4	109	8	1063	16	4158	56
5:15 - 5:30	12	0	12	0	44	0	62	2	264	1	26	2	56	1	5	0	8	1	63	0	280	1	85	1	916	9	4081	54
5:30 - 5:45	28	0	28	0	56	0	60	1	248	3	32	0	46	0	1	0	20	0	69	0	356	3	82	1	1044	9	4100	49
5:45 - 6:00	20	0	20	0	56	0	67	1	260	3	29	0	44	3	0	0	16	1	46	0	300	2	63	1	922	11	3945	44
HORA PICO 3:00-4:00	43	2	66	3	204	3	302	10	1140	15	171	1	245	2	12	0	63	3	262	27	1299	15	375	8	TOTAL HORA PICO		4185	80
																											FHP=	0.88

CONTEO VEHICULAR (HORAS PICOS)
PR-3 & PR-825

FECHA: 16-Feb-05
INTERSECCION: PR-3, RAMPA PR-53 & Villa Humacao
NOMBRE: F.REYES

HORA A.M.	ACCESO NORTE IZQUIERDA LIVIANOS	ACCESO NORTE IZQUIERDA PESADOS	ACCESO NORTE RECTO LIVIANOS	ACCESO NORTE RECTO PESADOS	ACCESO NORTE DERECHA LIVIANOS	ACCESO NORTE DERECHA PESADOS	ACCESO ESTE IZQUIERDA LIVIANOS	ACCESO ESTE IZQUIERDA PESADOS	ACCESO ESTE RECTO LIVIANOS	ACCESO ESTE RECTO PESADOS	ACCESO ESTE DERECHA LIVIANOS	ACCESO ESTE DERECHA PESADOS	ACCESO SUR IZQUIERDA LIVIANOS	ACCESO SUR IZQUIERDA PESADOS	ACCESO SUR RECTO LIVIANOS	ACCESO SUR RECTO PESADOS	ACCESO SUR DERECHA LIVIANOS	ACCESO SUR DERECHA PESADOS	ACCESO OESTE IZQUIERDA LIVIANOS	ACCESO OESTE IZQUIERDA PESADOS	ACCESO OESTE RECTO LIVIANOS	ACCESO OESTE RECTO PESADOS	ACCESO OESTE DERECHA LIVIANOS	ACCESO OESTE DERECHA PESADOS	SUMATORIA 15 MIN. LIVIANOS	SUMATORIA 15 MIN. PESADOS	SUMATORIA 1 HORA LIVIANOS	SUMATORIA 1 HORA PESADOS
6:00 - 6:15	34	0	2	0	22	0	2	0	107	0	11	0	17	0	2	0	2	0	41	0	95	1	3	0	341	1		
6:15 - 6:30	28	0	1	0	26	1	3	0	132	1	8	0	23	0	1	0	2	0	35	0	96	3	6	0	351	5		
6:30 - 6:45	53	2	5	0	67	1	7	0	190	5	6	0	31	0	6	0	5	0	33	1	150	6	22	0	585	14		
6:45 - 7:00	71	9	10	0	70	2	7	0	162	4	4	0	50	0	5	0	7	0	30	1	178	4	12	0	606	20	1873	40
7:00 - 7:15	59	0	17	0	72	1	11	1	210	8	4	0	59	1	5	0	9	0	40	2	142	4	25	0	663	14	2195	53
7:15 - 7:30	46	3	5	0	98	1	11	5	189	3	2	0	61	0	5	0	13	0	49	1	112	6	17	0	638	18	2472	66
7:30 - 7:45	65	0	17	0	118	1	9	0	232	4	4	0	62	0	6	0	25	0	39	1	169	15	52	0	618	21	2725	73
7:45 - 8:00	84	1	17	0	165	0	29	3	235	16	5	0	68	0	7	0	25	0	45	3	163	8	47	1	900	32	3019	85
8:00 - 8:15	63	0	9	0	92	2	15	0	176	4	4	0	63	0	4	0	25	0	57	3	192	8	27	1	748	18	3104	89
8:15 - 8:30	54	1	11	1	98	1	10	0	133	5	2	0	34	2	2	0	6	0	48	1	164	9	7	1	569	21	3025	92
8:30 - 8:45	39	1	4	0	90	1	4	0	174	7	4	0	33	1	2	0	5	2	37	1	184	5	25	0	601	18	2808	89
8:45 - 9:00	26	0	2	0	62	0	1	2	144	2	3	1	24	0	5	0	9	1	41	2	152	4	21	1	490	13	2398	79
HORA PICO 7:15-8:15	258	4	48	0	464	4	65	8	832	27	16	0	322	0	22	0	88	0	190	8	656	35	143	2	TOTAL HORA PICO		3104	89
																											FHP=	0.86

HORA P.M.	ACCESO NORTE IZQUIERDA LIVIANOS	ACCESO NORTE IZQUIERDA PESADOS	ACCESO NORTE RECTO LIVIANOS	ACCESO NORTE RECTO PESADOS	ACCESO NORTE DERECHA LIVIANOS	ACCESO NORTE DERECHA PESADOS	ACCESO ESTE IZQUIERDA LIVIANOS	ACCESO ESTE IZQUIERDA PESADOS	ACCESO ESTE RECTO LIVIANOS	ACCESO ESTE RECTO PESADOS	ACCESO ESTE DERECHA LIVIANOS	ACCESO ESTE DERECHA PESADOS	ACCESO SUR IZQUIERDA LIVIANOS	ACCESO SUR IZQUIERDA PESADOS	ACCESO SUR RECTO LIVIANOS	ACCESO SUR RECTO PESADOS	ACCESO SUR DERECHA LIVIANOS	ACCESO SUR DERECHA PESADOS	ACCESO OESTE IZQUIERDA LIVIANOS	ACCESO OESTE IZQUIERDA PESADOS	ACCESO OESTE RECTO LIVIANOS	ACCESO OESTE RECTO PESADOS	ACCESO OESTE DERECHA LIVIANOS	ACCESO OESTE DERECHA PESADOS	SUMATORIA 15 MIN. LIVIANOS	SUMATORIA 15 MIN. PESADOS	SUMATORIA 1 HORA LIVIANOS	SUMATORIA 1 HORA PESADOS
3:00 - 3:15	46	0	13	0	70	0	8	0	201	2	3	0	61	0	8	0	16	0	59	1	197	3	41	0	720	6		
3:15 - 3:30	68	1	19	0	98	1	7	0	211	7	12	0	46	0	10	0	22	0	69	0	193	4	57	0	802	13		
3:30 - 3:45	77	1	12	0	77	0	13	0	329	3	39	0	36	0	10	0	10	0	52	1	215	9	37	0	907	14		
3:45 - 4:00	61	3	15	0	78	0	3	0	242	9	18	1	39	0	5	0	17	0	74	2	239	4	32	0	823	20	3252	61
4:00 - 4:15	64	1	12	0	80	1	9	0	189	1	31	0	43	0	7	0	6	0	57	2	236	2	55	0	799	7	3331	62
4:15 - 4:30	65	3	6	0	68	1	7	0	200	1	18	0	31	0	7	0	14	0	61	0	185	7	44	0	704	12	3233	61
4:30 - 4:45	55	2	17	0	81	1	6	0	267	4	14	0	42	0	2	0	18	0	55	0	206	4	53	0	815	11	3141	58
4:45 - 5:00	71	0	18	0	99	1	14	0	219	2	12	0	44	0	16	0	9	0	63	0	206	6	69	0	840	9	3158	39
5:00 - 5:15	69	2	17	1	88	3	13	0	236	4	28	0	45	0	13	0	24	0	56	0	204	5	63	0	836	15	3196	47
5:15 - 5:30	55	2	15	0	79	2	13	0	273	2	17	0	63	0	9	0	19	0	62	0	212	2	67	0	874	8	3366	43
5:30 - 5:45	58	2	11	0	68	0	10	0	198	2	10	3	48	0	15	1	17	0	59	0	237	2	60	2	790	12	3349	44
5:45 - 6:00	47	0	12	0	65	0	8	0	242	3	21	0	47	1	18	0	15	0	67	1	190	2	49	0	763	7	3291	42
HORA PICO 4:30-5:30	250	6	67	1	325	7	46	0	997	12	71	0	184	0	40	0	70	0	238	0	827	17	252	0	TOTAL HORA PICO		3365	43
																											FHP=	0.87

CONTEO VEHICULAR (HORAS PICOS)
PR-3 & ENTRDA CENTRO COMERCIAL

FECHA: 17-Feb-06
INTERSECCION: PR-3 & ENTRADA CENTRO COMERCIAL
NOMBRE: F.REYES

	ACCESO NORTE						ACCESO ESTE						ACCESO SUR						ACCESO OESTE									
	IZQUIERDA		RECTO		DERECHA		IZQUIERDA		RECTO		DERECHA		IZQUIERDA		RECTO		DERECHA		IZQUIERDA		RECTO		DERECHA		SUMATORIA (15 MIN)		SUMATORIA (1 HORA)	
HORA A.M.	LIVIANOS	PESADOS	LIVIANOS	PESADOS	LIVIANOS	PESADOS	LIVIANOS	PESADOS	LIVIANOS	PESADOS	LIVIANOS	PESADOS	LIVIANOS	PESADOS	LIVIANOS	PESADOS	LIVIANOS	PESADOS	LIVIANOS	PESADOS	LIVIANOS	PESADOS	LIVIANOS	PESADOS	LIVIANOS	PESADOS	LIVIANOS	PESADOS
6:00 - 6:15	4	0	0	0	8	0	0	0	94	2	0	0	0	0	0	0	0	0	13	0	103	1	0	0	222	3		
6:16 - 6:30	1	0	0	0	12	1	0	0	116	3	0	0	0	0	0	0	0	0	16	2	126	3	0	0	271	9		
6:30 - 6:45	3	0	0	0	19	0	0	0	165	2	1	0	0	0	0	0	0	0	21	0	189	5	0	0	368	7		
6:45 - 7:00	4	0	0	0	18	1	0	0	173	8	7	1	0	0	0	0	0	0	35	1	217	4	0	0	454	13	1315	32
7:00 - 7:15	0	0	0	0	12	0	0	0	219	8	3	0	0	0	0	0	0	0	37	5	165	12	0	0	436	22	1529	51
7:16 - 7:30	6	0	0	0	21	0	0	0	230	9	5	1	0	0	0	0	0	0	40	2	175	5	0	0	480	17	1738	69
7:30 - 7:45	9	0	0	0	19	1	0	0	242	5	4	0	0	0	0	0	0	0	45	2	216	8	0	0	536	18	1906	88
7:45 - 8:00	5	0	0	0	27	5	0	0	221	4	8	0	0	0	0	0	0	0	58	0	266	13	0	0	596	22	2047	77
8:00 - 8:15	6	0	0	0	30	2	0	0	158	7	10	1	0	0	0	0	0	0	68	0	209	11	0	0	481	21	2092	76
8:15 - 8:30	5	0	0	0	23	3	0	0	121	12	6	0	0	0	0	0	0	0	71	5	145	11	0	0	371	31	1963	90
8:30 - 8:45	6	0	0	0	46	1	0	0	132	8	9	0	0	0	0	0	0	0	75	3	125	14	0	0	392	23	1839	97
8:45 - 9:00	5	0	0	0	64	1	0	0	112	10	9	1	0	0	0	0	0	0	93	2	121	8	0	0	394	22	1838	97
HORA PICO 7:15-8:15	26	0	0	0	97	8	0	0	851	25	30	2	0	0	0	0	0	0	222	4	886	37	0	0	TOTAL HORA PICO		2092	76
																											FHP=	0.88

	ACCESO NORTE						ACCESO ESTE						ACCESO SUR						ACCESO OESTE									
	IZQUIERDA		RECTO		DERECHA		IZQUIERDA		RECTO		DERECHA		IZQUIERDA		RECTO		DERECHA		IZQUIERDA		RECTO		DERECHA		SUMATORIA (15 MIN)		SUMATORIA (1 HORA)	
HORA P.M.	LIVIANOS	PESADOS	LIVIANOS	PESADOS	LIVIANOS	PESADOS	LIVIANOS	PESADOS	LIVIANOS	PESADOS	LIVIANOS	PESADOS	LIVIANOS	PESADOS	LIVIANOS	PESADOS	LIVIANOS	PESADOS	LIVIANOS	PESADOS	LIVIANOS	PESADOS	LIVIANOS	PESADOS	LIVIANOS	PESADOS	LIVIANOS	PESADOS
3:00 - 3:15	18	0	0	0	83	2	0	0	234	8	13	0	0	0	0	0	0	0	107	0	220	6	0	0	676	16		
3:16 - 3:30	15	0	0	0	104	1	0	0	203	4	11	0	0	0	0	0	0	0	100	1	211	12	0	0	644	19		
3:30 - 3:45	18	0	0	0	89	1	0	0	260	7	5	0	0	0	0	0	0	0	127	0	203	1	0	0	702	9		
3:45 - 4:00	11	0	0	0	62	2	0	0	194	5	12	0	0	0	0	0	0	0	107	0	197	7	0	0	603	14	2624	57
4:00 - 4:15	13	0	0	0	68	0	0	0	202	9	4	1	0	0	0	0	0	0	105	0	195	4	0	0	605	14	2554	55
4:15 - 4:30	12	0	0	0	89	2	0	0	160	2	5	1	0	0	0	0	0	0	91	1	182	6	0	0	539	12	2449	49
4:30 - 4:45	19	1	0	0	95	0	0	0	216	4	16	0	0	0	0	0	0	0	103	3	187	5	0	0	635	13	2382	53
4:46 - 5:00	18	0	0	0	93	3	0	0	195	6	5	0	0	0	0	0	0	0	126	0	191	5	0	0	627	13	2486	52
5:00 - 5:15	23	0	0	0	102	0	0	0	279	4	10	0	0	0	0	0	0	0	132	0	198	6	0	0	744	9	2646	47
5:16 - 5:30	15	0	0	0	90	2	0	0	138	2	9	1	0	0	0	0	0	0	96	0	178	4	0	0	526	9	2532	44
5:30 - 5:45	23	1	0	0	88	0	0	0	181	6	18	1	0	0	0	0	0	0	103	0	176	7	0	0	587	16	2484	46
5:45 - 6:00	17	0	0	0	86	1	0	0	173	6	8	0	0	0	0	0	0	0	93	0	167	4	0	0	544	11	2481	44
HORA PICO 3:00-4:00	62	0	0	0	358	6	0	0	891	24	41	0	0	0	0	0	0	0	441	1	831	20	0	0	TOTAL HORA PICO		2024	57
																											FHP=	0.94

CONTEO VEHICULAR (HORAS PICOS)
PR-3 & CIUDAD CRISTIANA

FECHA: 17-Feb-05
INTERSECCION: PR-3 & CIUDAD CRISTIANA
NOMBRE: F.REYES

	ACCESO NORTE						ACCESO ESTE						ACCESO SUR						ACCESO OESTE									
	IZQUIERDA		RECTO		DERECHA		IZQUIERDA		RECTO		DERECHA		IZQUIERDA		RECTO		DERECHA		IZQUIERDA		RECTO		DERECHA		SUMATORIA (15 MIN)		SUMATORIA (1 HORA)	
HORA A.M.	LIVIANOS	PESADOS	LIVIANOS	PESADOS	LIVIANOS	PESADOS	LIVIANOS	PESADOS	LIVIANOS	PESADOS	LIVIANOS	PESADOS	LIVIANOS	PESADOS	LIVIANOS	PESADOS	LIVIANOS	PESADOS	LIVIANOS	PESADOS	LIVIANOS	PESADOS	LIVIANOS	PESADOS	LIVIANOS	PESADOS	LIVIANOS	PESADOS
6:00 - 6:15	6	6	0	0	0	0	2	0	78	3	0	0	11	0	0	0	3	0	0	0	45	4	5	0	149	7		
6:15 - 6:30	0	0	0	0	0	0	0	0	100	1	0	0	15	1	0	0	1	0	0	0	61	2	3	0	200	4		
6:30 - 6:45	0	0	0	0	0	0	4	0	149	1	0	0	16	1	0	0	2	0	0	0	74	2	8	0	253	4		
6:45 - 7:00	0	0	0	0	0	0	3	0	142	5	0	0	30	0	0	0	5	0	0	0	102	0	3	0	285	5	887	20
7:00 - 7:15	0	0	0	0	0	0	2	0	185	5	0	0	34	0	0	0	8	0	0	0	95	8	7	0	332	13	1070	26
7:15 - 7:30	0	0	0	0	0	0	7	0	200	8	0	0	44	0	0	0	10	0	0	0	130	3	7	0	398	11	1298	33
7:30 - 7:45	0	0	0	0	0	0	3	0	211	3	0	0	42	1	0	0	4	0	0	0	151	7	11	0	422	11	1437	40
7:45 - 8:00	0	0	0	0	0	0	4	0	192	4	0	0	43	0	0	0	9	0	0	0	139	9	16	0	403	13	1555	48
8:00 - 8:15	0	0	0	0	0	0	10	0	140	9	0	0	14	0	0	0	2	0	0	0	164	7	17	0	347	16	1570	51
8:15 - 8:30	0	0	0	0	0	0	6	0	123	6	0	0	16	2	0	0	3	0	0	0	95	13	14	1	257	24	1429	64
8:30 - 8:45	0	0	0	0	0	0	1	0	150	6	0	0	11	0	0	0	3	0	0	0	96	9	14	1	275	16	1262	69
8:45 - 9:00	0	0	0	0	0	0	3	113	9	4	0	0	11	0	0	0	3	0	0	0	94	8	5	0	126	123	1004	179
HORA PICO 7:15-8:15	0	0	0	0	0	0	24	0	743	24	0	0	143	1	0	0	25	0	0	0	584	26	51	0	TOTAL HORA PICO		1570	51
																											FHP=	0.94

	ACCESO NORTE						ACCESO ESTE						ACCESO SUR						ACCESO OESTE									
	IZQUIERDA		RECTO		DERECHA		IZQUIERDA		RECTO		DERECHA		IZQUIERDA		RECTO		DERECHA		IZQUIERDA		RECTO		DERECHA		SUMATORIA (15 MIN)		SUMATORIA (1 HORA)	
HORA P.M.	LIVIANOS	PESADOS	LIVIANOS	PESADOS	LIVIANOS	PESADOS	LIVIANOS	PESADOS	LIVIANOS	PESADOS	LIVIANOS	PESADOS	LIVIANOS	PESADOS	LIVIANOS	PESADOS	LIVIANOS	PESADOS	LIVIANOS	PESADOS	LIVIANOS	PESADOS	LIVIANOS	PESADOS	LIVIANOS	PESADOS	LIVIANOS	PESADOS
3:00 - 3:15	0	0	0	0	0	0	9	0	199	6	0	0	20	0	0	0	4	0	0	0	172	6	33	0	437	11		
3:15 - 3:30	0	0	0	0	0	0	6	0	149	3	0	0	13	0	0	0	1	0	0	0	154	9	37	0	370	11		
3:30 - 3:45	0	0	0	0	0	0	13	2	147	7	0	0	15	1	0	0	3	0	0	0	208	3	26	0	412	13		
3:45 - 4:00	0	0	0	0	0	0	6	0	145	5	0	0	22	0	0	0	4	0	0	0	176	3	36	1	399	5	1608	44
4:00 - 4:15	0	0	0	0	0	0	3	0	131	4	0	0	14	0	0	0	2	0	0	0	148	2	35	0	333	6	1504	35
4:15 - 4:30	0	0	0	0	0	0	2	0	140	1	0	0	26	0	0	0	4	0	0	0	179	3	22	0	373	4	1507	32
4:30 - 4:45	0	0	0	0	0	0	6	0	131	1	0	0	14	0	0	0	2	0	0	0	157	3	23	2	345	6	1440	26
4:45 - 5:00	0	0	0	0	0	0	7	0	145	5	0	0	22	0	0	0	3	0	0	0	176	3	28	0	381	8	1432	24
5:00 - 5:15	0	0	0	0	0	0	5	0	145	3	0	0	18	0	0	0	0	0	0	0	190	7	25	0	374	10	1473	28
5:15 - 5:30	0	0	0	0	0	0	5	0	126	1	0	0	22	0	0	0	1	0	0	0	183	3	23	1	360	5	1460	29
5:30 - 5:45	0	0	0	0	0	0	0	0	157	4	0	0	16	0	0	0	4	0	0	0	182	8	31	1	370	13	1485	36
5:45 - 6:00	0	0	0	0	0	0	8	0	135	3	0	0	19	0	0	0	2	0	0	0	141	5	26	0	330	8	1434	36
HORA PICO 3:00-4:00	0	0	0	0	0	0	34	2	640	21	0	0	70	1	0	0	12	0	0	0	720	19	132	1	TOTAL HORA PICO		1606	44
																											FHP=	0.92

CONTEO VEHICULAR (HORAS PICOS)
PR-3 & PR-925

FECHA: 17-Feb-05
INTERSECCION: PR-3 & PR-925
NOMBRE: F.REYES

HORA A.M.	ACCESO NORTE						ACCESO ESTE						ACCESO SUR						ACCESO OESTE						SUMATORIA (15 MIN)		SUMATORIA (1 HORA)	
	IZQUIERDA		RECTO		DERECHA		IZQUIERDA		RECTO		DERECHA		IZQUIERDA		RECTO		DERECHA		IZQUIERDA		RECTO		DERECHA					
	LIVIANOS	PESADOS	LIVIANOS	PESADOS	LIVIANOS	PESADOS	LIVIANOS	PESADOS	LIVIANOS	PESADOS	LIVIANOS	PESADOS	LIVIANOS	PESADOS	LIVIANOS	PESADOS	LIVIANOS	PESADOS	LIVIANOS	PESADOS	LIVIANOS	PESADOS	LIVIANOS	PESADOS	LIVIANOS	PESADOS	LIVIANOS	PESADOS
6:00 - 6:15	4	0	0	0	20	1	0	0	67	2	2	0	0	0	0	0	0	0	3	1	31	3	0	0	127	7		
6:15 - 6:30	2	0	0	0	20	0	0	0	80	2	4	0	0	0	0	0	0	0	8	0	63	1	0	0	167	3		
6:30 - 6:45	2	0	0	0	21	0	0	0	113	2	2	0	0	0	0	0	0	0	10	0	38	2	0	0	188	4		
6:45 - 7:00	10	0	0	0	29	0	0	0	120	4	3	0	0	0	0	0	0	0	10	0	62	0	0	0	234	4	714	18
7:00 - 7:15	7	0	0	0	21	0	0	0	169	1	4	0	0	0	0	0	0	0	14	0	64	4	0	0	269	5	856	18
7:15 - 7:30	13	0	0	0	31	0	0	0	176	3	8	0	0	0	0	0	0	0	18	0	88	1	0	0	334	4	1023	17
7:30 - 7:45	19	0	0	0	35	1	0	0	180	1	11	0	0	0	0	0	0	0	27	1	110	3	0	0	383	8	1220	19
7:45 - 8:00	13	0	0	0	28	0	0	0	168	3	15	0	0	0	0	0	0	0	22	0	99	6	0	0	345	9	1331	24
8:00 - 8:15	14	1	0	0	37	1	0	0	100	4	6	1	0	0	0	0	0	0	25	1	110	5	0	0	292	13	1364	32
8:15 - 8:30	5	0	0	0	16	0	0	0	97	2	7	1	0	0	0	0	0	0	10	2	67	7	0	0	202	12	1222	40
8:30 - 8:45	3	0	0	0	15	1	0	0	107	2	3	0	0	0	0	0	0	0	10	1	71	6	0	0	209	10	1048	44
8:45 - 9:00	6	0	6	0	12	2	0	0	81	4	6	1	0	0	0	0	0	0	14	0	61	2	0	0	189	9	992	44
HORA PICO 7:15-8:15	59	1	0	0	132	2	0	0	624	11	40	1	0	0	0	0	0	0	92	2	407	15	0	0	TOTAL HORA PICO		1354	32
																											FHP=	0.89

HORA P.M.	ACCESO NORTE						ACCESO ESTE						ACCESO SUR						ACCESO OESTE						SUMATORIA (15 MIN)		SUMATORIA (1 HORA)	
	IZQUIERDA		RECTO		DERECHA		IZQUIERDA		RECTO		DERECHA		IZQUIERDA		RECTO		DERECHA		IZQUIERDA		RECTO		DERECHA					
	LIVIANOS	PESADOS	LIVIANOS	PESADOS	LIVIANOS	PESADOS	LIVIANOS	PESADOS	LIVIANOS	PESADOS	LIVIANOS	PESADOS	LIVIANOS	PESADOS	LIVIANOS	PESADOS	LIVIANOS	PESADOS	LIVIANOS	PESADOS	LIVIANOS	PESADOS	LIVIANOS	PESADOS	LIVIANOS	PESADOS	LIVIANOS	PESADOS
3:00 - 3:15	14	0	0	0	20	0	0	0	140	4	16	0	0	0	0	0	0	0	22	0	136	2	0	0	348	6		
3:15 - 3:30	7	0	0	0	12	0	0	0	102	2	18	0	0	0	0	0	0	0	25	0	129	4	0	0	292	6		
3:30 - 3:45	11	0	0	0	15	0	0	0	107	2	7	0	0	0	0	0	0	0	45	0	166	2	0	0	361	4		
3:45 - 4:00	5	0	0	0	24	0	0	0	97	2	18	0	0	0	0	0	0	0	30	0	168	1	0	0	332	3	1323	19
4:00 - 4:15	5	0	0	0	13	0	0	0	110	0	7	0	0	0	0	0	0	0	34	1	127	0	0	0	296	1	1271	14
4:15 - 4:30	4	0	0	0	6	0	0	0	108	0	7	0	0	0	0	0	0	0	30	0	138	2	0	0	291	2	1270	19
4:30 - 4:45	7	0	0	0	13	0	0	0	80	1	12	0	0	0	0	0	0	0	37	0	160	0	0	0	311	1	1238	7
4:45 - 5:00	3	0	0	0	17	0	0	0	114	2	8	0	0	0	0	0	0	0	32	0	153	4	0	0	327	6	1225	16
5:00 - 5:15	4	0	0	0	18	0	0	0	88	2	15	0	0	0	0	0	0	0	26	0	154	1	0	0	305	3	1234	12
5:15 - 5:30	13	0	0	0	6	1	0	0	80	1	10	0	0	0	0	0	0	0	41	0	142	2	0	0	292	4	1235	14
5:30 - 5:45	12	0	0	0	13	0	0	0	109	3	6	0	0	0	0	0	0	0	29	1	141	5	0	0	310	9	1234	22
5:45 - 6:00	12	0	0	0	13	0	0	0	100	2	6	0	0	0	0	0	0	0	19	0	107	2	0	0	259	4	1186	26
HORA PICO 3:45-4:45	37	0	0	0	71	0	0	0	446	10	59	0	0	0	0	0	0	0	122	0	568	9	0	0	TOTAL HORA PICO		1323	19
																											FHP=	0.95

ANEJO 2
GENERACION DE VIAJES

Castillos de la Montaña
Summary of Multi-Use Trip Generation
Average Weekday Driveway Volumes
marzo 24, 2005

Land Use	Size	24 Hour Two-Way Volume	AM Pk Hour Enter	AM Pk Hour Exit	PM Pk Hour Enter	PM Pk Hour Exit
Apartments	210 Dwelling Units	1392	17	90	88	44
Single Family Detached Housing	92 Dwelling Units	960	18	55	63	36
Apartments	720 Dwelling Units	4450	58	302	274	137
Total		6802	93	447	425	217

Note: A zero indicates no data available.

TRIP GENERATION BY MICROTRANS

ANEJO 3
ANALISI DE TRANSITO ACTUAL
AASIDRA 2.0

Akcelik & Associates Pty Ltd - aaSIDRA 2.0.0.205

FJRP
Francisco J. Reyes P Registered User No. 50310
Licence Type: Professional, Single Computer

Time and Date of Analysis 12:41 AM, Mar 21,2005

Filename: C:\Documents and Settings\Francisco\My Documents\Francisco\Humacao\Sea View\Sidra\925-3AMP.OUT

Castillos de la Monta?a
Intersecci?n PR-925 & PR-3; Hora Pico AM, Transito actual
Intersection ID: 1

aaTraffic SIDRA US Highway Capacity Manual (2000) Version

RUN INFORMATION

* Basic Parameters:
  Intersection Type: Unsignalised - Two-Way Stop Control
  Driving on the right-hand side of the road
  Input data specified in US units
  Default Values File No. 11
  Peak flow period (for performance): 15 minutes
  Unit time (for volumes): 60 minutes (Total Flow Period)
  Delay definition: Control delay
                    Geometric delay included
  HCM Delay and Queue Models option selected
  Level of Service based on: Delay (HCM method)
  Queue definition: Back of queue, 95th Percentile

Castillos de la Monta?a
Intersecci?n PR-925 & PR-3; Hora Pico AM, Transito actual
Intersection ID: 1

DEFAULT PARAMETERS

Default values for some of the important general parameters:
(Default Values File: DEF11.SDF)

1. Basic saturation flow: 1900 tcu/h

   This value applies mainly to signalised intersections. For roundabouts and sign-controlled intersections, it is used for determining capacity of priority and continuous movements.

2. Through car equivalents for signalised intersections

	LEFT		THROUGH		RIGHT	
	LV	HV	LV	HV	LV	HV
Normal	1.053	2.000	1.000	2.000	1.176	2.000
Restricted	1.303	2.500			1.426	2.500

3. Opposed turn parameters (Two-Way Stop Control)

	Crit. Gap	Fol.up Hdway	Min. Deps	% Exit Flow Opposing
Left turns :	7.5	3.5	2.0	50
Through :	6.5	4.0	2.0	50
Right turns:	6.9	3.3	2.0	50
Opposed turns from priority road:				
	4.1	2.2	2.0	0

4. Cruise speed= 40 mi/h, Approach Distance= 1800 ft

5. Queue space per vehicle in feet
   Light vehicles: 25.0 Heavy vehicles: 45.0

A full list of input data defaults and ranges is given in the Input Guide part of aaSIDRA User Guide.

Castillos de la Monta?a
Intersecci?n PR-925 & PR-3; Hora Pico AM, Transito actual
Intersection ID: 1
Stop Sign Controlled Intersection

Table S.0 - TRAFFIC FLOW DATA

Mov No.	Left LV	Left HV	Through LV	Through HV	Right LV	Right HV	Flow Scale	Peak Flow Factor
VEHICLES Demand flows in veh/hour as used by the program								
West: PR-3 West Approach								
12	103	2	457	17	0	0	1.00	0.89
East: PR-3 East Approach								
22	0	0	701	12	0	0	1.00	0.89
23	0	0	0	0	45	1	1.00	0.89
North: PR-925 North Approach								
42	66	1	0	0	0	0	1.00	0.89
43	0	0	0	0	148	2	1.00	0.89

Based on unit time = 60 minutes.
Flow Scale and Peak Hour Factor effects included in flow values.

Castillos de la Monta?a
Intersecci?n PR-925 & PR-3; Hora Pico AM, Transito actual
Intersection ID: 1
Stop Sign Controlled Intersection

Table S.2 - MOVEMENT CAPACITY PARAMETERS

Mov No.	Dem Flow (veh /h)	Total Opng Flow (veh/h)	%HV	Adjust. Opng Flow (pcu/h)	Total Cap. (veh /h)	Prac. Deg. Satn xp	Prac. Spare Cap. (%)	Lane Util (%)	Deg. Satn x
West: PR-3 West Approach									
12 LT	579	713	1.7	713	1476	0.80	104	100	0.392

East: PR-3 East Approach									
22	T	713	0			1737	0.80	95	100	0.410
23	R	46	0			112	0.80	95	100	0.411
North: PR-925 North Approach										
42	L	67	1210+	2.4	1210	76	0.80	-9	100	0.882
43	R	150	736+	1.7	736	169	0.80	-10	100	0.888*

+ Percentage of exiting flow included in total opposing flow

Castillos de la Monta?a
Intersecci?n PR-925 & PR-3; Hora Pico AM, Transito actual
Intersection ID: 1
Stop Sign Controlled Intersection

Table S.3 - INTERSECTION PARAMETERS

Intersection Level of Service	=	B
Worst movement Level of Service	=	F
Average intersection delay (s)	=	13.7
Largest average movement delay (s)	=	74.8
Largest back of queue, 95% (ft)	=	310
Performance Index	=	30.89
Degree of saturation (highest)	=	0.888
Practical Spare Capacity (lowest)	=	-10 %
Total vehicle capacity, all lanes (veh/h)	=	3570
Total vehicle flow (veh/h)	=	1555
Total person flow (pers/h)	=	1866
Total vehicle delay (veh-h/h)	=	5.93
Total person delay (pers-h/h)	=	7.11
Total effective vehicle stops (veh/h)	=	468
Total effective person stops (pers/h)	=	561
Total vehicle travel (veh-mi/h)	=	647.5
Total cost ($/h)	=	274.00
Total fuel (ga/h)	=	29.1
Total CO2 (kg/h)	=	275.99

Castillos de la Monta?a
Intersecci?n PR-925 & PR-3; Hora Pico AM, Transito actual
Intersection ID: 1
Stop Sign Controlled Intersection

Table S.8 - LANE FLOW AND CAPACITY INFORMATION

Lan No.	Mov No.	Dem Flow (veh/h) Lef	Thru	Rig	Tot	Min Cap (veh /h)	Tot Cap (veh /h)	Deg. Satn x	Lane Util %
West: PR-3 West Approach									
1	LT	12	105	474	0	579	512	1476	0.392	100
East: PR-3 East Approach									
1	TR	22,	0	713	46	759	759	1849	0.410	100

```
        23
-------------------------------------------------------
North: PR-925 North Approach
1 LR    42,    67    0  150  217   120  245 0.886  100
        43
-------------------------------------------------------
```

The capacity value for priority and continuous movements is obtained by adjusting the basic saturation flow for heavy vehicle and turning vehicle effects. Saturation flow scale applies if specified.

Castillos de la Monta?a
Intersecci?n PR-925 & PR-3; Hora Pico AM, Transito actual
Intersection ID: 1
Stop Sign Controlled Intersection

Table S.10 - MOVEMENT CAPACITY AND PERFORMANCE SUMMARY

Mov No.	Mov Typ	Dem Flow (veh /h)	Total Cap. (veh /h)	Lane Util (%)	Deg. Satn x	Aver. Delay (sec)	Eff. Stop Rate	95% Back of Queue (veh)	Perf. Index
West: PR-3 West Approach									
12	LT	579	1476	100	0.392	8.0	0.19	6.0	9.91
East: PR-3 East Approach									
22	T	713	1737	100	0.410	0.0	0.00	0.0	7.44
23	R	46	112	100	0.411	9.7	0.72	0.0	0.78
North: PR-925 North Approach									
42	L	67	76	100	0.882	74.8	1.44	12.3	3.92
43	R	150	169	100	0.888*	74.8	1.51	12.3	8.84

* Maximum degree of saturation

Castillos de la Monta?a
Intersecci?n PR-925 & PR-3; Hora Pico AM, Transito actual
Intersection ID: 1
Stop Sign Controlled Intersection

Table S.14 - SUMMARY OF INPUT AND OUTPUT DATA

Lane No.	Demand Flow (veh/h) L	T	R	Tot	%HV	Adj. Basic Satf.	Eff Grn (secs) 1st	2nd	Deg Sat x	Aver. Delay (sec)	Longest Queue (ft)	Shrt Lane (ft)
West: PR-3 West Approach												
1 LT	105	474		579	3				0.392	8.0	154	
	105	474	0	579	3				0.392	8.0	154	
East: PR-3 East Approach												
1 TR		713	46	759	2				0.410	0.6	0	

	0	713	46	759	2	0.410	0.6	
North: PR-925 North Approach								
1 LR	67		150	217	1	0.886	74.8	310
	67	0	150	217	1	0.886	74.8	310

ALL VEHICLES	Total Flow	% HV	Max X	Aver. Delay	Max Queue
	1555	2	0.888	13.7	310

Total flow period = 60 minutes. Peak flow period = 15 minutes.

Queue values in this table are 95% back of queue (feet).

Note: Basic Saturation Flows are not adjusted at roundabouts or sign-controlled intersections and apply only to continuous lanes.

Castillos de la Monta?a
Intersecci?n PR-925 & PR-3; Hora Pico AM, Transito actual
Intersection ID: 1
Stop Sign Controlled Intersection

Table S.15 - CAPACITY AND LEVEL OF SERVICE

Mov No.	Mov Typ	Total Flow (veh /h)	Total Cap. (veh /h)	Deg. of Satn (v/c)	Aver. Delay (sec)	LOS
West: PR-3 West Approach						
12	LT	579	1476	0.392	8.0	A
		579	1476	0.392	8.0	A
East: PR-3 East Approach						
22	T	713	1737	0.410	0.0	A
23	R	46	112	0.411	9.7	A
		759	1849	0.411	0.6	A
North: PR-925 North Approach						
42	L	67	76	0.882	74.8	F
43	R	150	169	0.888*	74.8	F
		217	245	0.888	74.8	F
ALL VEHICLES:		1555	3570	0.888	13.7	B

Level of Service calculations are based on average control delay including geometric delay (HCM criteria), independent of the current delay definition used.
For the criteria, refer to the "Level of Service" topic in the aaSIDRA Output Guide or the Output section of the on-line help.
* Maximum v/c ratio, or critical green periods

--- End of aaSIDRA Output ---

Akcelik & Associates Pty Ltd - aaSIDRA 2.0.0.205

FJRP
Francisco J. Reyes P Registered User No. 50310
Licence Type: Professional, Single Computer

Time and Date of Analysis 12:46 AM, Mar 21,2005

Filename: C:\Documents and Settings\Francisco\My Documents\Francisco\Humacao\Sea View\Sidra\CC-3AMP.OUT

Castillos de la Monta?a
Intrseccion PR-3 & acceso Ciudad Cristiana; Hora Pico AM, Transito Actual
Intersection ID: 2

aaTraffic SIDRA US Highway Capacity Manual (2000) Version

RUN INFORMATION
---

* Basic Parameters:
  Intersection Type: Unsignalised - Two-Way Stop Control
  Driving on the right-hand side of the road
  Input data specified in US units
  Default Values File No. 11
  Peak flow period (for performance): 15 minutes
  Unit time (for volumes): 60 minutes (Total Flow Period)
  Delay definition: Control delay
                Geometric delay included
  HCM Delay and Queue Models option selected
  Level of Service based on: Delay (HCM method)
  Queue definition: Back of queue, 95th Percentile

Castillos de la Monta?a
Intrseccion PR-3 & acceso Ciudad Cristiana; Hora Pico AM, Transito Actual
Intersection ID: 2

DEFAULT PARAMETERS

Default values for some of the important general parameters:
(Default Values File: DEF11.SDF)

1. Basic saturation flow: 1900 tcu/h

   This value applies mainly to signalised intersections. For roundabouts and sign-controlled intersections, it is used for determining capacity of priority and continuous movements.

2. Through car equivalents for signalised intersections

	LEFT		THROUGH		RIGHT	
	LV	HV	LV	HV	LV	HV
Normal	1.053	2.000	1.000	2.000	1.176	2.000
Restricted	1.303	2.500			1.426	2.500

3. Opposed turn parameters (Two-Way Stop Control)

	Crit. Gap	Fol.up Hdway	Min. Deps	% Exit Flow Opposing
Left turns :	7.5	3.5	2.0	50
Through :	6.5	4.0	2.0	50
Right turns:	6.9	3.3	2.0	50
Opposed turns from priority road:	4.1	2.2	2.0	0

4. Cruise speed= 40 mi/h, Approach Distance= 1800 ft

5. Queue space per vehicle in feet
   Light vehicles: 25.0 Heavy vehicles: 45.0

A full list of input data defaults and ranges is given in the Input Guide part of aaSIDRA User Guide.

Castillos de la Monta?a
Intrseccion PR-3 & acceso Ciudad Cristiana; Hora Pico AM, Transito Actual
Intersection ID: 2

Stop Sign Controlled Intersection

Table S.0 - TRAFFIC FLOW DATA

Mov No.	Left LV	Left HV	Through LV	Through HV	Right LV	Right HV	Flow Scale	Peak Flow Factor
VEHICLES Demand flows in veh/hour as used by the program								
West: PR-3 West Approach								
12	0	0	649	29	0	0	1.00	0.90
13	0	0	0	0	57	0	1.00	0.90
South: CC South Approach								
32	159	1	0	0	0	0	1.00	0.90
33	0	0	0	0	28	0	1.00	0.90
East: PR-3 East Approach								
22	27	0	826	27	0	0	1.00	0.90

Based on unit time = 60 minutes.
Flow Scale and Peak Hour Factor effects included in flow values.

Castillos de la Monta?a
Intrseccion PR-3 & acceso Ciudad Cristiana; Hora Pico AM, Transito Actual
Intersection ID: 2
Stop Sign Controlled Intersection

Table S.2 - MOVEMENT CAPACITY PARAMETERS

Mov No.	Dem Flow (veh /h)	Total Opng Flow (veh/h)	%HV	Adjust. Opng Flow (pcu/h)	Total Cap. (veh /h)	Prac. Deg. Satn xp	Prac. Spare Cap. (%)	Lane Util (%)	Deg. Satn x

West: PR-3 West Approach									
12	T	678	0		1664	0.80	96	100	0.407
13	R	57	0		140	0.80	96	100	0.407
South: CC South Approach									
32	L	160	1560+	3.6	1560	120	0.80	-40	100	1.333*
33	R	28	707+	4.1	707	383	0.80	994	100	0.073
East: PR-3 East Approach									
22	LT	880	678	4.3	678	1774	0.80	61	100	0.496

\+ Percentage of exiting flow included in total opposing flow

---

Castillos de la Monta?a
Intrseccion PR-3 & acceso Ciudad Cristiana; Hora Pico AM, Transito Actual
Intersection ID: 2
Stop Sign Controlled Intersection

Table S.3 - INTERSECTION PARAMETERS

Intersection Level of Service	=	D
Worst movement Level of Service	=	F
Average intersection delay (s)	=	27.7
Largest average movement delay (s)	=	263.7
Largest back of queue, 95% (ft)	=	732
Performance Index	=	49.25
Degree of saturation (highest)	=	1.333
Practical Spare Capacity (lowest)	=	-40 %
Total vehicle capacity, all lanes (veh/h)	=	4081
Total vehicle flow (veh/h)	=	1803
Total person flow (pers/h)	=	2164
Total vehicle delay (veh-h/h)	=	13.88
Total person delay (pers-h/h)	=	16.66
Total effective vehicle stops (veh/h)	=	336
Total effective person stops (pers/h)	=	404
Total vehicle travel (veh-mi/h)	=	751.4
Total cost ($/h)	=	381.10
Total fuel (ga/h)	=	38.0
Total CO2 (kg/h)	=	359.68

Castillos de la Monta?a
Intrseccion PR-3 & acceso Ciudad Cristiana; Hora Pico AM, Transito Actual
Intersection ID: 2
Stop Sign Controlled Intersection

Table S.8 - LANE FLOW AND CAPACITY INFORMATION

Lan No.	Mov No.	Dem Flow (veh/h) Lef	Thru	Rig	Tot	Min Cap (veh /h)	Tot Cap (veh /h)	Deg. Satn x	Lane Util %
West: PR-3 West Approach									
1 TR	12, 13	0	678	57	735	735	1804	0.407	100

South: CC South Approach									
1 L	32	160	0	0	160	120	120	1.333	100
2 R	33	0	0	28	28	28	383	0.073	100
East: PR-3 East Approach									
1 LT	22	27	853	0	880	880	1774	0.496	100

The capacity value for priority and continuous movements is obtained by adjusting the basic saturation flow for heavy vehicle and turning vehicle effects. Saturation flow scale applies if specified.

Castillos de la Monta?a
Intrseccion PR-3 & acceso Ciudad Cristiana; Hora Pico AM, Transito Actual
Intersection ID: 2
Stop Sign Controlled Intersection

Table S.10 - MOVEMENT CAPACITY AND PERFORMANCE SUMMARY

Mov No.	Mov Typ	Dem Flow (veh /h)	Total Cap. (veh /h)	Lane Util (%)	Deg. Satn x	Aver. Delay (sec)	Eff. Stop Rate	95% Back of Queue (veh)	Perf. Index
West: PR-3 West Approach									
12	T	678	1664	100	0.407	0.0	0.00	0.0	7.07
13	R	57	140	100	0.407	9.6	0.72	0.0	0.97
South: CC South Approach									
32	L	160	120	100	1.333*	263.7	1.48	29.1	25.55
33	R	28	383	100	0.073	15.2	1.00	0.5	0.71
East: PR-3 East Approach									
22	LT	880	1774	100	0.496	7.7	0.04	10.9	14.95

* Maximum degree of saturation

Castillos de la Monta?a
Intrseccion PR-3 & acceso Ciudad Cristiana; Hora Pico AM, Transito Actual
Intersection ID: 2
Stop Sign Controlled Intersection

Table S.14 - SUMMARY OF INPUT AND OUTPUT DATA

Lane No.	Demand Flow (veh/h) L	T	R	Tot	%HV	Adj. Basic Satf.	Eff Grn (secs) 1st	2nd	Deg Sat x	Aver. Delay (sec)	Longest Queue (ft)	Shrt Lane (ft)
West: PR-3 West Approach												
1 TR		678	57	735	4				0.407	0.7	0	
	0	678	57	735	4				0.407	0.7		
South: CC South Approach												

1 L	160			160	1		1.333	263.7	732
2 R			28	28	0		0.073	15.2	12
	160	0	28	188	1		1.333	226.7	732
East: PR-3 East Approach									
1 LT	27	853		880	3		0.496	7.7	279
	27	853	0	880	3		0.496	7.7	279
ALL VEHICLES				Total Flow 1803	% HV 3		Max X 1.333	Aver. Delay 27.7	Max Queue 732

Total flow period = 60 minutes. Peak flow period = 15 minutes.

Queue values in this table are 95% back of queue (feet).

Note: Basic Saturation Flows are not adjusted at roundabouts or sign-controlled intersections and apply only to continuous lanes.

Castillos de la Monta?a
Intrseccion PR-3 & acceso Ciudad Cristiana; Hora Pico AM, Transito Actual
Intersection ID: 2
Stop Sign Controlled Intersection

Table S.15 - CAPACITY AND LEVEL OF SERVICE

Mov No.	Mov Typ	Total Flow (veh /h)	Total Cap. (veh /h)	Deg. of Satn (v/c)	Aver. Delay (sec)	LOS
West: PR-3 West Approach						
12	T	678	1664	0.407	0.0	A
13	R	57	140	0.407	9.6	A
		735	1804	0.407	0.7	A
South: CC South Approach						
32	L	160	120	1.333*	263.7	F
33	R	28	383	0.073	15.2	C
		188	503	1.333	226.7	F
East: PR-3 East Approach						
22	LT	880	1774	0.496	7.7	A
		880	1774	0.496	7.7	A
ALL VEHICLES:		1803	4081	1.333	27.7	D

Level of Service calculations are based on average control delay including geometric delay (HCM criteria), independent of the current delay definition used.
For the criteria, refer to the "Level of Service" topic in the aaSIDRA Output Guide or the Output section of the on-line help.
* Maximum v/c ratio, or critical green periods

--- End of aaSIDRA Output ---

Akcelik & Associates Pty Ltd - aaSIDRA 2.0.0.205

FJRP
Francisco J. Reyes P Registered User No. 50310
Licence Type: Professional, Single Computer

Time and Date of Analysis 1:05 AM, Mar 23,2005

Filename: C:\Documents and Settings\Francisco\My Documents\Francisco\Humacao\Sea View\Sidra\Com-3AMP.OUT

Castillos de la Monta?a
Int. PR-3 & Acceso a Centro Comercial; Hora Pico AM, Transito actual
Intersection ID: 3

aaTraffic SIDRA US Highway Capacity Manual (2000) Version

```
*******************************************************************
*  UNSETTLED RESULTS.  aaSIDRA HAS NOT BEEN ABLE TO SOLVE THIS    *
*  CASE, PROBABLY DUE TO HIGH CONGESTION LEVELS.                  *
*******************************************************************
```

RUN INFORMATION

Parameter sensitivity run: "Optimum" Maximum Green = 65.0 %

* Basic Parameters:
  Intersection Type: Signalised - Actuated Isolated
  For fully-actuated signal timings, the following specifications will be ignored:
    Any maximum cycle time specification
    Any user-given cycle time (unless phase times also given)
    User-given cycle and phase times (if variable flow scale run)
    Any variable cycle time specification
    Any green split priority specification
  Driving on the right-hand side of the road
  Input data specified in US units
  Default Values File No. 11
  Peak flow period (for performance): 15 minutes
  Unit time (for volumes): 60 minutes (Total Flow Period)
  Delay definition: Control delay
                    Geometric delay included
  HCM Delay and Queue Models option selected
  Level of Service based on: Delay (HCM method)
  Queue definition: Back of queue, 95th Percentile

* No. of Main (Timing-Capacity) Iterations = 5
  Comparison of last two iterations:
    Difference in intersection degree of satn = 0.0 %
    Difference in total vehicle capacity   = 0.0 %
    Largest difference in eff. green times = 2 secs
    (max. value for stopping = 1 secs)
  Information on Previous Iteration:
    Cycle Time = 53
    Phase Times: 0, 17, 43
    Critical Movements: 12, 23(1st), 43(2nd)

One or more sets of variable run results have been omitted due to unsettled results.

* Forced stop due to oscillating results at iteration 4

Castillos de la Monta?a
Int. PR-3 & Acceso a Centro Comercial; Hora Pico AM, Transito actual
Intersection ID: 3

DEFAULT PARAMETERS

Default values for some of the important general parameters:
(Default Values File: DEF11.SDF)

1. Basic saturation flow: 1900 tcu/h

   This value applies mainly to signalised intersections. For roundabouts and sign-controlled intersections, it is used for determining capacity of priority and continuous movements.

2. Through car equivalents for signalised intersections

	LEFT		THROUGH		RIGHT	
	LV	HV	LV	HV	LV	HV
Normal	1.053	2.000	1.000	2.000	1.176	2.000
Restricted	1.303	2.500			1.426	2.500

3. Opposed turn parameters (Signalised intersection)

	Crit. Gap	Fol.up Hdway	Deps at End	% Exit Flow Opposing
Left turns :	4.5	2.5	2.0	0
Right turns:	4.0	2.4	2.5	0

4. Cruise speed= 40 mi/h, Approach Distance= 1800 ft

5. Queue space per vehicle in feet
   Light vehicles: 25.0 Heavy vehicles: 45.0

A full list of input data defaults and ranges is given in the Input Guide part of aaSIDRA User Guide.

Castillos de la Monta?a
Int. PR-3 & Acceso a Centro Comercial; Hora Pico AM, Transito actual
Intersection ID: 3
Actuated Isolated Signals, Cycle Time = 53

Table S.0 - TRAFFIC FLOW DATA

Mov No.	Left LV	Left HV	Through LV	Through HV	Right LV	Right HV	Flow Scale	Peak Flow Factor
VEHICLES	Demand flows in veh/hour as used by the program							
West: PR-3 West Approach								
12	252	5	0	0	0	0	1.00	0.88
11	0	0	984	42	0	0	1.00	0.88

East: PR-3 East Approach

21	0	0	967	30	0	0	1.00	0.88
23	0	0	0	0	34	2	1.00	0.88

North: Cent. Com. North Approach

42	30	0	0	0	0	0	1.00	0.88
43	0	0	0	0	99	0	1.00	0.88

Based on unit time = 60 minutes.
Flow Scale and Peak Hour Factor effects included in flow values.

Castillos de la Monta?a
Int. PR-3 & Acceso a Centro Comercial; Hora Pico AM, Transito actual
Intersection ID: 3
Actuated Isolated Signals, Cycle Time = 53

Table S.1 - MOVEMENT PHASE AND TIMING PARAMETERS

Mov No.	Mov Typ	PHASE MATRIX First Green Fr	To	Op	Pr	Second Green Fr	To	Op	Pr	Lost Tim 1st Grn	Lost Tim 2nd Grn	Req.Mov.Time 1st Grn	Req.Mov.Time 2nd Grn	Eff. Grn 1st Grn	Eff. Grn 2nd Grn
West: PR-3 West Approach															
12	L	*A	B							4		17.0Max		13	
11	T	B	D							4		25.7		22	
East: PR-3 East Approach															
21	T	B	D							4		25.8		22	
23	R	(Un2)*B	D			D	B	R		4	10	25.8	24.5	22	17
North: Cent. Com. North Approach															
42	L	D	A							4		10.0Min		6	
43	R	(Un1) A	D	R		*D	A			16	4	20.0Min	10.0Min	27	6

Current Phase Sequence No.: 1
Input phase sequence: A B D
Output phase sequence: A B D

Movement Types:
- Ped Pedestrian
- Dum Dummy
- Und Undetected in both green periods
- Un1 Undetected in 1st green period
- Un2 Undetected in 2nd green period

Under heading 'Op':
- L "Left" turns are opposed
- R "Right" turns are opposed
- LR "Left and Right" opposed
- C "Constant" saturation flow

Castillos de la Monta?a
Int. PR-3 & Acceso a Centro Comercial; Hora Pico AM, Transito actual
Intersection ID: 3
Actuated Isolated Signals, Cycle Time = 53

Table S.2 - MOVEMENT CAPACITY PARAMETERS

Mov No.	Dem Flow	Satn Flow	Flow Ratio	Total Cap.	Prac. Deg.	Prac. Spare	Lane Util	Deg. Satn

	(veh /h)	1st Grn	2nd Grn	1st Grn	2nd Grn	(veh /h)	Satn xp	Cap. (%)	(%)	x
West: PR-3 West Approach										
12 L	257	1595<		0.161		391	0.90	37	100	0.657
11 T	1026	3651		0.281		1516	0.90	33	100	0.677
East: PR-3 East Approach										
21 T	997	3513		0.284		1458	0.90	32	100	0.684*
23 R	36	0	164	0.326	0.218	53	0.90	33	100	0.679
North: Cent. Com. North Approach										
42 L	30	1805		0.017		204	0.90	513	100	0.147
43 R	99	967	1615	0.000	0.061	675	0.90	514	100	0.147

< Reduced saturation flow due to a short lane effect

Castillos de la Monta?a
Int. PR-3 & Acceso a Centro Comercial; Hora Pico AM, Transito actual
Intersection ID: 3
Actuated Isolated Signals, Cycle Time = 53

Table S.3 - INTERSECTION PARAMETERS

Crit Mov No.	App. & Turn	Green Period	Phases Fr	Phases To	Adjusted Lost Time	Adjusted Flow Ratio	Required Grn Time Ratio	Required Movement Time
12	W_L		A	B	17	-	-	17.0Max
23	E_R	1st	B	D	4	0.326	0.412	25.8
43	N_R	2nd	D	A	10	-	-	10.0Min
				Total:	31	0.326	0.412	52.8

- Flow ratio not used for cycle time calculations and the adjusted lost time equals the required movement time (=Min or Max as shown in Table S.1)

Cycle Time:

Minimum	Maximum	Practical	Chosen
30	NA	53	53

Intersection Level of Service	=	B
Worst movement Level of Service	=	C
Average intersection delay (s)	=	19.2
Largest average movement delay (s)	=	34.7
Largest back of queue, 95% (ft)	=	380
Performance Index	=	84.97
Degree of saturation (highest)	=	0.684
Practical Spare Capacity (lowest)	=	32 %
Total vehicle capacity, all lanes (veh/h)	=	4297
Total vehicle flow (veh/h)	=	2445
Total person flow (pers/h)	=	2934
Total vehicle delay (veh-h/h)	=	13.02
Total person delay (pers-h/h)	=	15.63
Total effective vehicle stops (veh/h)	=	1857
Total effective person stops (pers/h)	=	2228
Total vehicle travel (veh-mi/h)	=	1019.0

Total cost ($/h)	=	471.38
Total fuel (ga/h)	=	54.3
Total CO2 (kg/h)	=	514.77

Castillos de la Monta?a
Int. PR-3 & Acceso a Centro Comercial; Hora Pico AM, Transito actual
Intersection ID: 3
Actuated Isolated Signals, Cycle Time = 53

Table S.4 - PHASE INFORMATION

Phase No.	Change Time	Green Start	Displayed Green	Grn+Intgrn Secs	Prop.
A	0	4	13	17	0.321
B	17	21	22	26	0.491
D	43	47	6	10	0.189

Current Phase Sequence No.: 1
Input phase sequence: A B D
Output phase sequence: A B D

Castillos de la Monta?a
Int. PR-3 & Acceso a Centro Comercial; Hora Pico AM, Transito actual
Intersection ID: 3
Actuated Isolated Signals, Cycle Time = 53

Table S.8 - LANE FLOW AND CAPACITY INFORMATION

Lan No.	Mov No.	Dem Flow (veh/h) Lef	Thru	Rig	Tot	Lane Width (ft)	Saturation Flow Adj. Basic (tcu)	Aver 1st (veh)	Aver 2nd (veh)	End Cap (veh /h)	Tot Cap (veh /h)	Deg. Satn x	Lane Util %
West: PR-3 West Approach													
1 L	12	257	0	0	257	12.0	1900	1595<	0	0	391	0.657	100
2 T	11	0	513	0	513	12.0	1900	1825	0	0	758	0.677	100
3 T	11	0	513	0	513	12.0	1900	1825	0	0	758	0.677	100
East: PR-3 East Approach													
1 T	21	0	524	0	524	12.0	1900	1844	0	0	766	0.684	100
2 TR	21, 23	0	473	36	509	12.0	1900	274	1783	68	745	0.684	100
North: Cent. Com. North Approach													
1 L	42	30	0	0	30	12.0	1900	1805	0	0	204	0.147	100
2 R	43	0	0	99	99	12.0	1900	967	1615	68	675	0.147	100

< Reduced saturation flow due to a short lane effect

Basic Saturation Flow in this table is adjusted for lane width, approach grade, parking manoeuvres and number of buses stopping. Saturation flow scale applies if specified.

Castillos de la Monta?a
Int. PR-3 & Acceso a Centro Comercial; Hora Pico AM, Transito actual
Intersection ID: 3
Actuated Isolated Signals, Cycle Time = 53

Table S.10 - MOVEMENT CAPACITY AND PERFORMANCE SUMMARY

Mov No.	Mov Typ	Dem Flow (veh /h)	Total Cap. (veh /h)	Lane Util (%)	Deg. Satn x	Eff. Grn 1st Grn	Eff. Grn 2nd Grn	Aver. Delay (sec)	Eff. Stop Rate	95% Back of Queue (veh)	Perf. Index
West: PR-3 West Approach											
12 L		257	391<	100	0.657	13*		33.9	0.82	8.5	10.56
11 T		1026	1516	100	0.677	22		17.0	0.75	14.5	35.11
East: PR-3 East Approach											
21 T		997	1458	100	0.684*	22		17.5	0.76	14.8	34.31
23 R	(Un2)	36	53	100	0.679	22*	17	27.7	0.87	14.3	1.36
North: Cent. Com. North Approach											
42 L		30	204	100	0.147	6		34.7	0.72	1.0	1.21
43 R	(Un1)	99	675	100	0.147	27	6*	13.0	0.76	1.3	2.41

< Reduced capacity due to a short lane effect
* Maximum degree of saturation, or critical green periods

Castillos de la Monta?a
Int. PR-3 & Acceso a Centro Comercial; Hora Pico AM, Transito actual
Intersection ID: 3
Actuated Isolated Signals, Cycle Time = 53

Table S.14 - SUMMARY OF INPUT AND OUTPUT DATA

Lane No.	Demand Flow (veh/h) L	T	R	Tot	%HV	Adj. Basic Satf.	Eff Grn (secs) 1st	2nd	Deg Sat x	Aver. Delay (sec)	Longest Queue (ft)	Shrt Lane (ft)
West: PR-3 West Approach												
1 L	257			257	2	1900	13		0.657	33.9	216*	160
2 T		513		513	4	1900	22		0.677	17.0	374	
3 T		513		513	4	1900	22		0.677	17.0	374	
	257	1026	0	1283	4				0.677	20.4	374	
East: PR-3 East Approach												
1 T		524		524	3	1900	22		0.684	17.1	380	
2 TR		473	36	509	3	1900	1	22	0.684	18.6	367	
	0	997	36	1033	3				0.684	17.8	380	
North: Cent. Com. North Approach												
1 L	30			30	0	1900	6		0.147	34.7	26	
2 R			99	99	0	1900	27	6	0.147	13.0	32	
	30	0	99	129	0				0.147	18.0	32	

ALL VEHICLES	Total Flow	% HV	Cycle Time	Max X	Aver. Delay	Max Queue
	2445	3	53	0.684	19.2	380

Total flow period = 60 minutes. Peak flow period = 15 minutes.

Queue values in this table are 95% back of queue (feet).

Note: Basic Saturation Flows (in through car units) have been adjusted for grade, lane widths, parking manoeuvres and bus stops.

* Queue length exceeds short lane length due to specification of a percentile queue in the aaSIDRA Configuration File. For calculation of this statistic, you may specify the lane with full length.

Castillos de la Monta?a
Int. PR-3 & Acceso a Centro Comercial; Hora Pico AM, Transito actual
Intersection ID: 3
Actuated Isolated Signals, Cycle Time = 53

Table S.15 - CAPACITY AND LEVEL OF SERVICE

Mov No.	Mov Typ	Green Ratio (g/C) 1st grn	Green Ratio (g/C) 2nd grn	Total Flow (veh /h)	Total Cap. (veh /h)	Deg. of Satn (v/c)	Aver. Delay (sec)	LOS
West: PR-3 West Approach								
12 L		0.245*		257	391<	0.657	33.9	C
11 T		0.415		1026	1516	0.677	17.0	B
				1283	1907	0.677	20.4	C
East: PR-3 East Approach								
21 T		0.415		997	1458	0.684*	17.5	B
23 R	(Un2)	0.415*	0.321	36	53	0.679	27.7	C
				1033	1511	0.684	17.8	B
North: Cent. Com. North Approach								
42 L		0.113		30	204	0.147	34.7	C
43 R	(Un1)	0.509	0.113*	99	675	0.147	13.0	B
				129	880	0.147	18.0	B
ALL VEHICLES:				2445	4297	0.684	19.2	B
INTERSECTION (persons):				2934	4297	0.684	19.2	

Level of Service calculations are based on average control delay including geometric delay (HCM criteria), independent of the current delay definition used.
For the criteria, refer to the "Level of Service" topic in the aaSIDRA Output Guide or the Output section of the on-line help.

< Reduced capacity due to a short lane effect
* Maximum v/c ratio, or critical green periods

Castillos de la Monta?a
Int. PR-3 & Acceso a Centro Comercial; Hora Pico AM, Transito actual
Intersection ID: 3

Table S.23 - SENSITIVITY ANALYSIS RESULTS

Performance Measure	Smallest Value	Param Scale
Degree of Satn	0.680	70
Average Delay	19.2	65
Stop Rate	0.76	70
Max. Queue for Any Movement	14.5	50
Perf. Index	85.0	65
Cost total	471.4	65

Performance Measure	Largest Value	Param Scale
Total Vehicle Cap.	4336	60
Prac. Spare Cap.	32	70

Castillos de la Monta?a
Int. PR-3 & Acceso a Centro Comercial; Hora Pico AM, Transito actual
Intersection ID: 3

Scaled sensitivity parameter: Maximum Green

Table V.23 - INTERSECTION SUMMARY FOR VARIABLE PARAMETER SCALE

Param Scale (%)	Cycle Time (sec)	Total Veh. Cap.	Intersn Deg. of Satn	Prac. Spare Cap.	Aver. Delay (sec)	Stop Rate	Longest Queue (veh)	Perf. Index	Cost Total $/h
55	51	4236	0.722	25	20.7	0.78	15.0	86.9	482.0
70	55	4303	0.680	32	19.5	0.76	15.2	86.2	473.8
75	56	4252	0.693	30	20.2	0.76	15.7	87.8	479.5
80	58	4265	0.686	31	20.5	0.76	16.0	89.0	481.8
85	59	4217	0.699	29	21.3	0.77	16.5	90.7	487.5
90	61	4224	0.694	30	21.6	0.77	16.9	91.9	489.9
95	62	4179	0.706	27	22.3	0.77	17.4	93.6	495.8
100	64	4188	0.702	28	22.6	0.77	17.8	94.7	498.1
105	65	4145	0.713	26	23.4	0.78	18.2	96.4	504.0
110	67	4154	0.708	27	23.7	0.77	18.6	97.6	506.3
115	68	4114	0.719	25	24.5	0.78	19.1	99.3	512.3
120	70	4123	0.716	26	24.8	0.78	19.4	100.4	514.6

One or more sets of variable run results have been omitted due to unsettled results.

--- End of aaSIDRA Output ---

Akcelik & Associates Pty Ltd - aaSIDRA 2.0.0.205

FJRP
Francisco J. Reyes P Registered User No. 50310
Licence Type: Professional, Single Computer

Time and Date of Analysis 1:15 AM, Mar 23,2005

Filename: C:\Documents and Settings\Francisco\My Documents\Francisco\Humacao\Sea View\Sidra\53-VH-3AMP.OUT

Castillos de la Monta?a
InT. PR-3, Rampa PR-53 & Acceso V.H.; Hora Pico AM, Transito Actual
Intersection ID: 4

aaTraffic SIDRA US Highway Capacity Manual (2000) Version

RUN INFORMATION

Parameter sensitivity run: "Optimum" Maximum Green = 115.0 %

* Basic Parameters:
  Intersection Type: Signalised - Actuated Isolated
  For fully-actuated signal timings, the following specifications will be ignored:
    Any maximum cycle time specification
    Any user-given cycle time (unless phase times also given)
    User-given cycle and phase times (if variable flow scale run)
    Any variable cycle time specification
    Any green split priority specification
  Driving on the right-hand side of the road
  Input data specified in US units
  Default Values File No. 11
  Peak flow period (for performance): 15 minutes
  Unit time (for volumes): 60 minutes (Total Flow Period)
  Delay definition: Control delay
                    Geometric delay included
  HCM Delay and Queue Models option selected
  Level of Service based on: Delay (HCM method)
  Queue definition: Back of queue, 95th Percentile

* No. of Main (Timing-Capacity) Iterations = 4
  Comparison of last two iterations:
    Difference in intersection degree of satn = 1.4 %
    Difference in total vehicle capacity = 0.1 %
    Largest difference in eff. green times = 1 secs
    (max. value for stopping = 2 secs)
  Information on Previous Iteration:
    Cycle Time = 144
    Phase Times: 0, 27, 79, 117
    Critical Movements: 12, 21, 41, 32

Castillos de la Monta?a
InT. PR-3, Rampa PR-53 & Acceso V.H.; Hora Pico AM, Transito Actual
Intersection ID: 4

DEFAULT PARAMETERS

Default values for some of the important general parameters:
(Default Values File: DEF11.SDF)

1. Basic saturation flow: 1900 tcu/h

   This value applies mainly to signalised intersections. For roundabouts and sign-controlled intersections, it is used for determining capacity of priority and continuous movements.

2. Through car equivalents for signalised intersections

	L E F T		THROUGH		R I G H T	
	LV	HV	LV	HV	LV	HV
Normal	1.053	2.000	1.000	2.000	1.176	2.000
Restricted	1.303	2.500			1.426	2.500

3. Opposed turn parameters (Signalised intersection)

	Crit. Gap	Fol.up Hdway	Deps at End	% Exit Flow Opposing
Left turns :	4.5	2.5	2.0	0
Right turns:	4.0	2.4	2.5	0

4. Cruise speed= 40 mi/h, Approach Distance= 1800 ft

5. Queue space per vehicle in feet
   Light vehicles: 25.0 Heavy vehicles: 45.0

A full list of input data defaults and ranges is given in the Input Guide part of aaSIDRA User Guide.

Castillos de la Monta?a
InT. PR-3, Rampa PR-53 & Acceso V.H.; Hora Pico AM, Transito Actual
Intersection ID: 4
Actuated Isolated Signals, Cycle Time = 142

Table S.0 - TRAFFIC FLOW DATA

Mov No.	Left LV	Left HV	Through LV	Through HV	Right LV	Right HV	Flow Scale	Peak Flow Factor
VEHICLES	Demand flows in veh/hour as used by the program							
West: PR-. West Approach								
12	216	9	0	0	0	0	1.00	0.88
11	0	0	745	41	0	0	1.00	0.88
13	0	0	0	0	163	2	1.00	0.88
South: South Approach								
32	366	0	0	0	0	0	1.00	0.88
31	0	0	25	0	0	0	1.00	0.88
33	0	0	0	0	96	0	1.00	0.92
East: PR-3 East Approach								
22	75	9	0	0	0	0	1.00	0.88
21	0	0	945	31	0	0	1.00	0.88
23	0	0	0	0	18	0	1.00	0.88

North: Ramp PR-53 North Approach								
42	293	5	0	0	0	0	1.00	0.88
41	0	0	55	0	0	0	1.00	0.88
43	0	0	0	0	547	5	1.00	0.88

Based on unit time = 60 minutes.
Flow Scale and Peak Hour Factor effects included in flow values.

Castillos de la Monta?a
InT. PR-3, Rampa PR-53 & Acceso V.H.; Hora Pico AM, Transito Actual
Intersection ID: 4
Actuated Isolated Signals, Cycle Time = 142

Table S.1 - MOVEMENT PHASE AND TIMING PARAMETERS

Mov No.	Mov Typ	PHASE MATRIX First Green Fr	To	Op	Pr	Second Green Fr	To	Op	Pr	Lost Tim 1st Grn	Lost Tim 2nd Grn	Req.Mov.Time 1st Grn	Req.Mov.Time 2nd Grn	Eff. Grn 1st Grn	Eff. Grn 2nd Grn
West: PR-. West Approach															
12 L		*A	B							4		27.0Max		23	
11 T		B	C							4		45.8		47	
13 R	(Und)	B	C			C	B	R		4	7	31.0	30.0Min	47	84
South: South Approach															
32 L		*D	A							4		27.0Max		23	
31 T		D	A							4		22.8		23	
33 R	(Und)	A	D	R		D	A			30	4	30.0Min	20.7	85	23
East: PR-3 East Approach															
22 L		A	B							4		24.6		23	
21 T		*B	C							4		50.5		47	
23 R	(Und)	B	C			C	B	R		4	5	51.7	30.0Min	47	86
North: Ramp PR-53 North Approach															
42 L		C	D							4		27.0Max		33	
41 T		*C	D							4		36.1		33	
43 R	(Und)	C	D			D	C	R		4	39	62.0Max	62.0Max	33	66

Current Phase Sequence No.: 1
Input phase sequence: A B C D
Output phase sequence: A B C D

Movement Types:

Ped	Pedestrian
Dum	Dummy
Und	Undetected in both green periods
Un1	Undetected in 1st green period
Un2	Undetected in 2nd green period

Under heading 'Op':

L	"Left" turns are opposed
R	"Right" turns are opposed
LR	"Left and Right" opposed
C	"Constant" saturation flow

Castillos de la Monta?a
InT. PR-3, Rampa PR-53 & Acceso V.H.; Hora Pico AM, Transito Actual
Intersection ID: 4
Actuated Isolated Signals, Cycle Time = 142

Table S.2 - MOVEMENT CAPACITY PARAMETERS

Mov No.	Dem Flow (veh /h)	Satn Flow 1st Grn	Satn Flow 2nd Grn	Flow Ratio 1st Grn	Flow Ratio 2nd Grn	Total Cap. (veh /h)	Prac. Deg. Satn xp	Prac. Spare Cap. (%)	Lane Util (%)	Deg. Satn x
West: PR-. West Approach										
12 L	225	1479<		0.152		240	0.90	-4	100	0.939
11 T	786	3612		0.218		1196	0.90	37	100	0.657
13 R	165	1151<	1149<	0.143	0.000	1061	0.90	479	100	0.156
South: South Approach										
32 L	366	1805		0.203		292	0.90	-28	100	1.252*
31 T	25	472		0.053		76	0.90	175	26	0.327
33 R	96	156	1235	0.000	0.078	293	0.90	175	26	0.327
East: PR-3 East Approach										
22 L	84	1411<		0.060		229	0.90	145	100	0.368
21 T	976	3618		0.270		1198	0.90	10	100	0.815
23 R	18	57	5	0.316	0.000	22	0.90	9	100	0.822
North: Ramp PR-53 North Approach										
42 L	298	1796		0.166		417	0.90	26	100	0.714
41 T	55	401		0.137		93	0.90	52	83	0.590
43 R	552	251	1886	0.361	0.245	935	0.90	52	83	0.590

< Reduced saturation flow due to a short lane effect

Castillos de la Monta?a
InT. PR-3, Rampa PR-53 & Acceso V.H.; Hora Pico AM, Transito Actual
Intersection ID: 4
Actuated Isolated Signals, Cycle Time = 142

Table S.3 - INTERSECTION PARAMETERS

Crit Mov No.	App. & Turn	Green Period	Phases Fr	Phases To	Adjusted Lost Time	Adjusted Flow Ratio	Required Grn Time Ratio	Required Movement Time
12	W_L		A	B	27	-	-	27.0Max
21	E_T		B	C	4	0.270	0.328	50.5
41	N_T		C	D	4	0.137	0.226	36.1
32	S_L		D	A	27	-	-	27.0Max
				Total:	62	0.407	0.554	140.6

- Flow ratio not used for cycle time calculations and the adjusted lost time equals the required movement time (=Min or Max as shown in Table S.1)

Cycle Time:

Minimum	Maximum	Practical	Chosen
40	NA	139	142

Intersection Level of Service = E

Worst movement Level of Service	=	F
Average intersection delay (s)	=	67.9
Largest average movement delay (s)	=	215.6
Largest back of queue, 95% (ft)	=	1098
Performance Index	=	271.97
Degree of saturation (highest)	=	1.252
Practical Spare Capacity (lowest)	=	-28 %
Total vehicle capacity, all lanes (veh/h)	=	6051
Total vehicle flow (veh/h)	=	3646
Total person flow (pers/h)	=	4375
Total vehicle delay (veh-h/h)	=	68.73
Total person delay (pers-h/h)	=	82.47
Total effective vehicle stops (veh/h)	=	3230
Total effective person stops (pers/h)	=	3876
Total vehicle travel (veh-mi/h)	=	1517.4
Total cost ($/h)	=	1193.54
Total fuel (ga/h)	=	102.2
Total CO2 (kg/h)	=	968.05

Castillos de la Monta?a
InT. PR-3, Rampa PR-53 & Acceso V.H.; Hora Pico AM, Transito Actual
Intersection ID: 4
Actuated Isolated Signals, Cycle Time = 142

Table S.4 - PHASE INFORMATION

Phase No.	Change Time	Green Start	Displayed Green	Grn+Intgrn Secs	Prop.
A	0	4	23	27	0.190
B	27	31	47	51	0.359
C	78	82	33	37	0.261
D	115	119	23	27	0.190

Current Phase Sequence No.: 1
Input phase sequence: A B C D
Output phase sequence: A B C D

Castillos de la Monta?a
InT. PR-3, Rampa PR-53 & Acceso V.H.; Hora Pico AM, Transito Actual
Intersection ID: 4
Actuated Isolated Signals, Cycle Time = 142

Table S.8 - LANE FLOW AND CAPACITY INFORMATION

Lan No.	Mov No.	Dem Flow (veh/h) Lef	Thru	Rig	Tot	Lane Width (ft)	Saturation Flow Adj. Basic (tcu)	Aver 1st (veh)	Aver 2nd (veh)	End Cap (veh /h)	Tot Cap (veh /h)	Deg. Satn x	Lane Util %
West: PR-. West Approach													
1 L	12	225	0	0	225	12.0	1900	1479<	0	0	240	0.939	100
2 T	11	0	393	0	393	12.0	1900	1806	0	0	598	0.658	100
3 T	11	0	393	0	393	12.0	1900	1806	0	0	598	0.658	100
4 R	13	0	0	165	165	12.0	1900	1151<	1149<	25	1060	0.156	100

South:	South Approach												
1 L	32, 31	366	0	0	366	12.0	1900	1805	0	0	292	1.252	100
2 TR	31, 33	0	25	96	121	12.0	1900	1289	1667	25	370	0.327	26P
East:	PR-3 East Approach												
1 L	22	84	0	0	84	12.0	1900	1411<	0	0	229	0.367	100
2 T	21	0	497	0	497	12.0	1900	1842	0	0	610	0.815	100
3 TR	21, 23	0	479	18	497	12.0	1900	1832	505	25	610	0.815	100
North:	Ramp PR-53 North Approach												
1 L	42, 41	298	0	0	298	12.0	1900	1796	0	0	417	0.714	100
2 TR	41, 43	0	55	552	607	12.0	1900	2207	2820	25*	1028	0.590	83P

< Reduced saturation flow due to a short lane effect
* Large end capacity has resulted in a saturation flow which is larger than the full unopposed saturation flow
P Lane under-utilisation found by the "Program"

Basic Saturation Flow in this table is adjusted for lane width, approach grade, parking manoeuvres and number of buses stopping. Saturation flow scale applies if specified.

Castillos de la Monta?a
InT. PR-3, Rampa PR-53 & Acceso V.H.; Hora Pico AM, Transito Actual
Intersection ID: 4
Actuated Isolated Signals, Cycle Time = 142

Table S.10 - MOVEMENT CAPACITY AND PERFORMANCE SUMMARY

Mov No.	Mov Typ	Dem Flow (veh /h)	Total Cap. (veh /h)	Lane Util (%)	Deg. Satn x	Eff. Grn 1st Grn	Eff. Grn 2nd Grn	Aver. Delay (sec)	Eff. Stop Rate	95% Back of Queue (veh)	Perf. Index
West:	PR-. West Approach										
12 L		225	240<	100	0.939	23*		86.5	0.86	18.6	18.90
11 T		786	1196	100	0.657	47		47.9	0.78	27.0	52.90
13 R	(Und)	165	1061<	100	0.156	47	84	9.5	0.66	1.2	3.32
South:	South Approach										
32 L		366	292	100	1.252*	23*		215.6	1.35	43.9	55.32
31 T		25	76	26	0.327	23		30.9	0.68	6.7	1.26
33 R	(Und)	96	293	26	0.327	85	23	40.3	0.79	6.7	5.13
East:	PR-3 East Approach										
22 L		84	229<	100	0.368	23		70.1	0.78	6.8	6.28
21 T		976	1198	100	0.815	47*		56.6	0.85	36.5	72.74
23 R	(Und)	18	22	100	0.822	47	86	65.5	0.88	36.3	1.38
North:	Ramp PR-53 North Approach										
42 L		298	417	100	0.714	33		71.3	0.85	23.2	23.34
41 T		55	93	83	0.590	33*		27.1	0.92	27.9	2.72
43 R	(Und)	552	935	83	0.590	33	66	36.5	0.92	27.9	28.68

< Reduced capacity due to a short lane effect
* Maximum degree of saturation, or critical green periods

Castillos de la Monta?a
InT. PR-3, Rampa PR-53 & Acceso V.H.; Hora Pico AM, Transito Actual
Intersection ID: 4
Actuated Isolated Signals, Cycle Time = 142

Table S.14 - SUMMARY OF INPUT AND OUTPUT DATA

Lane No.	Demand Flow (veh/h) L	T	R	Tot	%HV	Adj. Basic Satf.	Eff Grn (secs) 1st	2nd	Deg Sat x	Aver. Delay (sec)	Longest Queue (ft)	Shrt Lane (ft)
West: PR-. West Approach												
1 L	225			225	4	1900	23		0.939	86.5r	479*	260
2 T		393		393	5	1900	47		0.658	47.9	704	
3 T		393		393	5	1900	47		0.658	47.9	704	
4 R			165	165	1	1900	47	84	0.156	9.5	29	260
	225	786	165	1176	4				0.939	49.9	704	
South: South Approach												
1 L	366			366	0	1900	23		1.252	215.6	1098	
2 TR		25	96	121	0	1900	11	23	0.327	38.3	167	
	366	25	96	487	0				1.252	171.5	1098	
East: PR-3 East Approach												
1 L	84			84	11	1900	23		0.367	70.1	185	260
2 T		497		497	3	1900	47		0.815	57.0	937	
3 TR		479	18	497	3	1900	47	1	0.815	56.5	930	
	84	976	18	1078	4				0.815	57.8	937	
North: Ramp PR-53 North Approach												
1 L	298			298	2	1900	33		0.714	71.3	588	
2 TR		55	552	607	1	1900	24	33	0.590	35.7	702	
	298	55	552	905	1				0.714	47.5	702	

ALL VEHICLES	Total Flow	% HV	Cycle Time	Max X	Aver. Delay	Max Queue
	3646	3	142	1.252	67.9	1098

Total flow period = 60 minutes. Peak flow period = 15 minutes.

Queue values in this table are 95% back of queue (feet).

Note: Basic Saturation Flows (in through car units) have been adjusted for grade, lane widths, parking manoeuvres and bus stops.

* Queue length exceeds short lane length due to specification of a percentile queue in the aaSIDRA Configuration File. For calculation of this statistic, you may specify the lane with full length.

r Delay, stops and queue length for this lane have been cut down to fit in

the queuing space. The amount cut may not be accounted for fully in the adjacent lane performance statistics. You may wish to change the short lane to a full lane to investigate the extent of this effect.

Castillos de la Monta?a
InT. PR-3, Rampa PR-53 & Acceso V.H.; Hora Pico AM, Transito Actual
Intersection ID: 4
Actuated Isolated Signals, Cycle Time = 142

Table S.15 - CAPACITY AND LEVEL OF SERVICE

Mov No.	Mov Typ	Green Ratio (g/C) 1st grn	2nd grn	Total Flow (veh /h)	Total Cap. (veh /h)	Deg. of Satn (v/c)	Aver. Delay (sec)	LOS
West: PR-. West Approach								
12 L		0.162*		225	240<	0.939	86.5	F
11 T		0.331		786	1196	0.657	47.9	D
13 R	(Und)	0.331	0.592	165	1061<	0.156	9.5	A
				1176	2496	0.939	49.9	D
South: South Approach								
32 L		0.162*		366	292	1.252*	215.6	F
31 T		0.162		25	76	0.327	30.9	C
33 R	(Und)	0.599	0.162	96	293	0.327	40.3	D
				487	662	1.252	171.5	F
East: PR-3 East Approach								
22 L		0.162		84	229<	0.368	70.1	E
21 T		0.331*		976	1198	0.815	56.6	E
23 R	(Und)	0.331	0.606	18	22	0.822	65.5	E
				1078	1448	0.822	57.8	E
North: Ramp PR-53 North Approach								
42 L		0.232		298	417	0.714	71.3	E
41 T		0.232*		55	93	0.590	27.1	C
43 R	(Und)	0.232	0.465	552	935	0.590	36.5	D
				905	1445	0.714	47.4	D
ALL VEHICLES:				3646	6051	1.252	67.9	E
INTERSECTION (persons):				4375	6051	1.252	67.9	

Level of Service calculations are based on
average control delay including geometric delay (HCM criteria),
independent of the current delay definition used.
For the criteria, refer to the "Level of Service" topic in the
aaSIDRA Output Guide or the Output section of the on-line help.
< Reduced capacity due to a short lane effect
* Maximum v/c ratio, or critical green periods

Castillos de la Monta?a
InT. PR-3, Rampa PR-53 & Acceso V.H.; Hora Pico AM, Transito Actual
Intersection ID: 4

Table S.23 - SENSITIVITY ANALYSIS RESULTS

Performance Measure	Smallest Value	Param Scale
Degree of Satn	1.234	120
Average Delay	67.9	115
Stop Rate	0.89	120
Max. Queue for Any Movement	43.9	120
Perf. Index	250.1	55
Cost total	1190.4	100

Performance Measure	Largest Value	Param Scale
Total Vehicle Cap.	6121	90
Prac. Spare Cap.	-27	120

Castillos de la Monta?a
InT. PR-3, Rampa PR-53 & Acceso V.H.; Hora Pico AM, Transito Actual
Intersection ID: 4

Scaled sensitivity parameter: Maximum Green

Table V.23 - INTERSECTION SUMMARY FOR VARIABLE PARAMETER SCALE

Param Scale (%)	Cycle Time (sec)	Total Veh. Cap.	Intersn Deg. of Satn	Prac. Spare Cap.	Aver. Delay (sec)	Stop Rate	Longest Queue (veh)	Perf. Index	Cost Total $/h
50	85	5848	1.724	-48	79.7	0.98	48.0	251.1	1303.3
55	91	5884	1.677	-46	77.0	0.97	47.9	250.1	1268.7
60	96	5902	1.622	-45	74.9	0.96	47.5	250.2	1249.7
65	103	5949	1.607	-44	74.7	0.94	48.2	253.9	1248.2
70	108	5983	1.564	-42	73.4	0.93	47.9	255.1	1236.8
75	114	6041	1.541	-42	72.7	0.92	48.3	257.5	1229.9
80	119	6068	1.508	-40	72.0	0.91	48.2	260.1	1224.4
85	123	6103	1.467	-39	70.6	0.90	47.7	261.3	1213.2
90	126	6121	1.419	-37	69.3	0.90	46.8	261.7	1201.5
95	129	6104	1.377	-35	68.8	0.90	46.0	263.8	1197.4
100	132	6099	1.338	-33	68.0	0.89	45.3	264.9	1190.4
105	136	6057	1.313	-31	68.4	0.89	45.1	268.6	1195.6
110	140	6044	1.290	-30	68.7	0.89	44.9	271.7	1198.4
115	142	6051	1.252	-28	67.9	0.89	43.9	272.0	1193.5
120	146	6035	1.234	-27	68.5	0.89	43.9	276.0	1201.4

--- End of aaSIDRA Output ---

Akcelik & Associates Pty Ltd - aaSIDRA 2.0.0.205

FJRP
Francisco J. Reyes P Registered User No. 50310
Licence Type: Professional, Single Computer

Time and Date of Analysis 2:00 AM, Mar 23,2005

Filename: C:\Documents and Settings\Francisco\My Documents\Francisco\Humacao\Sea View\Sidra\925-3-53AMP.OUT

Castillos de la Monta?as
Int. PR-3, PR-925 & Rampa PR-53; Hora Pico AM, Transito Actual
Intersection ID: 5

aaTraffic SIDRA US Highway Capacity Manual (2000) Version

RUN INFORMATION

Parameter sensitivity run: "Optimum" Maximum Green = 60.0 %

* Basic Parameters:
  Intersection Type: Signalised - Actuated Isolated
  For fully-actuated signal timings, the following specifications will be ignored:
    Any maximum cycle time specification
    Any user-given cycle time (unless phase times also given)
    User-given cycle and phase times (if variable flow scale run)
    Any variable cycle time specification
    Any green split priority specification
  Driving on the right-hand side of the road
  Input data specified in US units
  Default Values File No. 11
  Peak flow period (for performance): 15 minutes
  Unit time (for volumes): 60 minutes (Total Flow Period)
  Delay definition: Control delay
                    Geometric delay included
  HCM Delay and Queue Models option selected
  Level of Service based on: Delay (HCM method)
  Queue definition: Back of queue, 95th Percentile

* No. of Main (Timing-Capacity) Iterations = 1
  Comparison of last two iterations:
    Difference in intersection degree of satn = 0.0 %
    Difference in total vehicle capacity   = 0.0 %
    Largest difference in eff. green times = 0 secs
    (max. value for stopping = 0 secs)

Castillos de la Monta?as
Int. PR-3, PR-925 & Rampa PR-53; Hora Pico AM, Transito Actual

Intersection ID: 5

DEFAULT PARAMETERS

Default values for some of the important general parameters:
(Default Values File: DEF11.SDF)

1. Basic saturation flow: 1900 tcu/h

   This value applies mainly to signalised intersections. For roundabouts and sign-controlled intersections, it is used for determining capacity of priority and continuous movements.

2. Through car equivalents for signalised intersections

	LEFT		THROUGH		RIGHT	
	LV	HV	LV	HV	LV	HV
Normal	1.053	2.000	1.000	2.000	1.176	2.000
Restricted	1.303	2.500			1.426	2.500

3. Opposed turn parameters (Signalised intersection)

	Crit. Gap	Fol.up Hdway	Deps at End	% Exit Flow Opposing
Left turns :	4.5	2.5	2.0	0
Right turns:	4.0	2.4	2.5	0

4. Cruise speed= 40 mi/h, Approach Distance= 1800 ft

5. Queue space per vehicle in feet
   Light vehicles: 25.0 Heavy vehicles: 45.0

A full list of input data defaults and ranges is given in the Input Guide part of aaSIDRA User Guide.

Castillos de la Monta?as
Int. PR-3, PR-925 & Rampa PR-53; Hora Pico AM, Transito Actual
Intersection ID: 5
Actuated Isolated Signals, Cycle Time = 100

Table S.0 - TRAFFIC FLOW DATA

Mov No.	Left LV	Left HV	Through LV	Through HV	Right LV	Right HV	Flow Scale	Peak Flow Factor
VEHICLES Demand flows in veh/hour as used by the program								
West: PR-3 West Approach								
12	227	9	0	0	0	0	1.00	0.88
11	0	0	973	43	0	0	1.00	0.88
13	0	0	0	0	170	1	1.00	0.88
South: Ramp PR-53 South Approach								
32	480	8	0	0	0	0	1.00	0.88
33	0	0	27	1	107	5	1.00	0.88
East: PR-3 East Approach								
22	322	9	0	0	0	0	1.00	0.88
21	0	0	1349	26	0	0	1.00	0.88
23	0	0	0	0	231	7	1.00	0.88
North: PR-925 North Approach								
42	85	0	0	0	0	0	1.00	0.88
43	0	0	86	0	325	6	1.00	0.88

Based on unit time = 60 minutes.
Flow Scale and Peak Hour Factor effects included in flow values.

Castillos de la Monta?as
Int. PR-3, PR-925 & Rampa PR-53; Hora Pico AM, Transito Actual
Intersection ID: 5
Actuated Isolated Signals, Cycle Time = 100

Table S.1 - MOVEMENT PHASE AND TIMING PARAMETERS

Mov No.	Mov Typ	PHASE MATRIX First Green Fr	To	Op	Pr	Second Green Fr	To	Op	Pr	Lost Tim 1st Grn	Lost Tim 2nd Grn	Req.Mov.Time 1st Grn	Req.Mov.Time 2nd Grn	Eff. Grn 1st Grn	Eff. Grn 2nd Grn
West: PR-3 West Approach															
12 L		A	B							4		16.0Max		12	
11 T		B	C							4		34.0Max		30	
13 R	(Un2)	B	C			C	B	R		4	14	34.0Max	30.0Min	30	52
South: Ramp PR-53 South Approach															
32 L		C	D							4		16.0Max		30	
33 TR		*C	D							4		34.0Max		30	
East: PR-3 East Approach															
22 L		*A	B							4		16.0Max		12	
21 LT		*B	C							4		34.0Max		30	
North: PR-925 North Approach															
42 L		*D	A							4		16.0Max		12	
43 TR	(Un1)	D	A							4		27.0		12	

Current Phase Sequence No.: 1
Input phase sequence: A B C D
Output phase sequence: A B C D

Movement Types:
- Ped Pedestrian
- Dum Dummy
- Und Undetected in both green periods
- Un1 Undetected in 1st green period
- Un2 Undetected in 2nd green period

Under heading 'Op':
- L "Left" turns are opposed
- R "Right" turns are opposed
- LR "Left and Right" opposed
- C "Constant" saturation flow

Castillos de la Monta?as
Int. PR-3, PR-925 & Rampa PR-53; Hora Pico AM, Transito Actual
Intersection ID: 5
Actuated Isolated Signals, Cycle Time = 100

Table S.2 - MOVEMENT CAPACITY PARAMETERS

Mov No.	Dem Flow (veh /h)	Satn Flow 1st Grn	Satn Flow 2nd Grn	Flow Ratio 1st Grn	Flow Ratio 2nd Grn	Total Cap. (veh /h)	Prac. Deg. Satn xp	Prac. Spare Cap. (%)	Lane Util (%)	Deg. Satn x

West: PR-3 West Approach										
12	L	236	1745		0.135		209	0.90	-20	100	1.127
11	T	1016	4327<		0.235		1298	0.90	15	100	0.783
13	R	171	599<	74	0.268	0.143	218	0.90	15	100	0.784
South: Ramp PR-53 South Approach											
32	L	488	2349<		0.208		705	0.90	30	100	0.692
33	TR	140	674<		0.208		202	0.90	30	100	0.692
East: PR-3 East Approach											
22	L	250	1762		0.142		211	0.90	-24	100	1.181
21	LT	1456E	5576		0.261		1673	0.90	3	100	0.871
23	R	238	1582		0.150		1582	0.98	551	100	0.150
North: PR-925 North Approach											
42	L	85	1805		0.164		217	0.90	-34	79	1.368*
43	TR	206	1595		0.129		191	0.90	-16	79	1.075

E "Excess" flow from the short lane of an adjacent movement added to normal flow

< Reduced saturation flow due to a short lane effect

Castillos de la Monta?as
Int. PR-3, PR-925 & Rampa PR-53; Hora Pico AM, Transito Actual
Intersection ID: 5
Actuated Isolated Signals, Cycle Time = 100

Table S.3 - INTERSECTION PARAMETERS

Crit Mov No.	App. & Turn	Green Period	Phases Fr	Phases To	Adjusted Lost Time	Adjusted Flow Ratio	Required Grn Time Ratio	Required Movement Time
22	E_L		A	B	16	-	-	16.0Max
21	E_LT		B	C	34	-	-	34.0Max
33	S_TR		C	D	34	-	-	34.0Max
42	N_L		D	A	16	-	-	16.0Max
				Total:	100	0.000	0.000	100.0

- Flow ratio not used for cycle time calculations and the adjusted lost time equals the required movement time (=Min or Max as shown in Table S.1)

Cycle Time:

Minimum	Maximum	Practical	Chosen
40	NA	101	100

Intersection Level of Service	=	E
Worst movement Level of Service	=	F
Average intersection delay (s)	=	65.0
Largest average movement delay (s)	=	252.7
Largest back of queue, 95% (ft)	=	1481
Performance Index	=	294.28
Degree of saturation (highest)	=	1.368
Practical Spare Capacity (lowest)	=	-34 %
Total vehicle capacity, all lanes (veh/h)	=	6507

Total vehicle flow (veh/h)	=	4497
Total person flow (pers/h)	=	5396
Total vehicle delay (veh-h/h)	=	81.24
Total person delay (pers-h/h)	=	97.48
Total effective vehicle stops (veh/h)	=	4012
Total effective person stops (pers/h)	=	4814
Total vehicle travel (veh-mi/h)	=	1784.4
Total cost ($/h)	=	1372.84
Total fuel (ga/h)	=	119.7
Total CO2 (kg/h)	=	1133.87

Castillos de la Monta?as
Int. PR-3, PR-925 & Rampa PR-53; Hora Pico AM, Transito Actual
Intersection ID: 5
Actuated Isolated Signals, Cycle Time = 100

Table S.4 - PHASE INFORMATION

Phase No.	Change Time	Green Start	Displayed Green	Grn+Intgrn Secs	Prop.
A	0	4	12	16	0.160
B	16	20	30	34	0.340
C	50	54	30	34	0.340
D	84	88	12	16	0.160

Current Phase Sequence No.: 1
Input phase sequence: A B C D
Output phase sequence: A B C D

Castillos de la Monta?as
Int. PR-3, PR-925 & Rampa PR-53; Hora Pico AM, Transito Actual
Intersection ID: 5
Actuated Isolated Signals, Cycle Time = 100

Table S.8 - LANE FLOW AND CAPACITY INFORMATION

Lan No.	Mov No.	Dem Flow (veh/h) Lef	Thru	Rig	Tot	Lane Width (ft)	Saturation Flow Adj. Basic (tcu)	Aver 1st (veh)	Aver 2nd (veh)	End Cap (veh /h)	Tot Cap (veh /h)	Deg. Satn x	Lane Util %
West: PR-3 West Approach													
1 L	12	236	0	0	236	12.0	1900	1745	0	0	209	1.127	100
2 T	11	0	428	0	428	12.0	1900	1823	0	0	547	0.783	100
3 T	11	0	428	0	428	12.0	1900	1823	0	0	547	0.783	100
4 TR	11, 13	0	160	171	331	12.0	1900	1268<	1058	36	423	0.783	100
South: Ramp PR-53 South Approach													
1 L	32	369	0	0	369	12.0	1900	1779	0	0	534	0.692	100
2 LTR	32, 33	119	28	112	259	12.0	1900	1244<	0	0	373	0.692	100
East: PR-3 East Approach													
1 L	22	250	0	0	250	12.0	1900	1762	0	0	211	1.182	100

2	LT	21	81E	401	0	482	12.0	1900	1847	0	0	554	0.871	100
3	T	21	0	487	0	487	12.0	1900	1865	0	0	559	0.871	100
4	T	21	0	487	0	487	12.0	1900	1865	0	0	559	0.871	100
5	R	23	0	0	238	238	12.0	1900	1582	1582	0	1582	0.150	100
North: PR-925 North Approach														
1	LTR	42	85	86E	125E	296	12.0	1900	1805	0	0	217	1.368	100
2	TR	42, 43	0	0	206	206	12.0	1900	1595	0	0	191	1.075	79P

E "Excess" flow from back of an adjacent short lane
< Reduced saturation flow due to a short lane effect
P Lane under-utilisation found by the "Program"

Basic Saturation Flow in this table is adjusted for lane width, approach grade, parking manoeuvres and number of buses stopping. Saturation flow scale applies if specified.

Castillos de la Monta?as
Int. PR-3, PR-925 & Rampa PR-53; Hora Pico AM, Transito Actual
Intersection ID: 5
Actuated Isolated Signals, Cycle Time = 100

Table S.10 - MOVEMENT CAPACITY AND PERFORMANCE SUMMARY

Mov No.	Mov Typ	Dem Flow (veh /h)	Total Cap. (veh /h)	Lane Util (%)	Deg. Satn x	Eff. Grn 1st Grn	Eff. Grn 2nd Grn	Aver. Delay (sec)	Eff. Stop Rate	95% Back of Queue (veh)	Perf. Index
West: PR-3 West Approach											
12	L	236	209	100	1.127	12		161.7	1.19	22.4	27.06
11	T	1016	1298<	100	0.783	30		42.1	0.84	24.1	58.32
13	R (Un2)	171	218<	100	0.784	30	52	43.6	0.86	16.0	9.06
South: Ramp PR-53 South Approach											
32	L	488	705<	100	0.692	30		47.8	0.86	20.0	28.17
33	TR	140	202<	100	0.692	30*		45.8	0.80	13.9	7.82
East: PR-3 East Approach											
22	L	250	211	100	1.181	12*		180.4	1.27	25.0	30.96
21	LT	1456E	1673	100	0.871	30*		51.6	0.94	28.9	93.44
23	R (Con)	238	1582	100	0.150	100		9.2	0.65	6.1 #	3.94
North: PR-925 North Approach											
42	L	85	217	79	1.368*	12*		252.7	1.65	34.3	13.44
43	TR (Un1)	206	191	79	1.075	12		148.1	1.09	18.8	22.06

E "Excess" flow from the short lane of an adjacent movement added to normal flow
< Reduced capacity due to a short lane effect
* Maximum degree of saturation, or critical green periods
# Largest density (passenger cars per km or mile) for any lane

---

Castillos de la Monta?as
Int. PR-3, PR-925 & Rampa PR-53; Hora Pico AM, Transito Actual
Intersection ID: 5

Actuated Isolated Signals, Cycle Time = 100

Table S.14 - SUMMARY OF INPUT AND OUTPUT DATA

Lane No.	Demand Flow (veh/h) L	T	R	Tot	%HV	Adj. Basic Satf.	Eff Grn (secs) 1st	2nd	Deg Sat x	Aver. Delay (sec)	Longest Queue (ft)	Shrt Lane (ft)
West: PR-3 West Approach												
1 L	236			236	4	1900	12		1.127	161.7	577*	360
2 T		428		428	4	1900	30		0.783	43.6	622	
3 T		428		428	4	1900	30		0.783	43.6	622	
4 TR		160	171	331	2	1900	30	4	0.783	39.0	407*	260
	236	1016	171	1423	4				1.127	62.1	622	
South: Ramp PR-53 South Approach												
1 L	369			369	2	1900	30		0.692	48.0	507	
2 LTR	119	28	112	259	3	1900	30		0.692	46.6	356*	260
	488	28	112	628	2				0.692	47.4	507	250d
East: PR-3 East Approach												
1 L	250			250	3	1900	12		1.182	180.4r	639*	360
2 LT	250	401		482	3	1900	30		0.871	51.7	729	
3 T		487		487	2	1900	30		0.871	51.6	734	
4 T		487		487	2	1900	30		0.871	51.6	734	
5 R			238	238	3	1900	100		0.150	9.2		260
	331	1375	238	1944	2				1.182	62.9	734	
North: PR-925 North Approach												
1 TR	85	0	206	206	2	1900	12		1.368	148.1	477	
2 TR		0	206	206	2	1900	12		1.075	148.1	477*	260
	85	86	331	502	1				1.368	210.1	1481	250d

ALL VEHICLES	Total Flow	% HV	Cycle Time	Max X	Aver. Delay	Max Queue
	4497	3	100	1.368	65.0	1481

Total flow period = 60 minutes. Peak flow period = 15 minutes.

Queue values in this table are 95% back of queue (feet).

Note: Basic Saturation Flows (in through car units) have been adjusted for grade, lane widths, parking manoeuvres and bus stops.

* Queue length exceeds short lane length due to specification of a percentile queue in the aaSIDRA Configuration File. For calculation of this statistic, you may specify the lane with full length.

d Short lane length on departure side.

r Delay, stops and queue length for this lane have been cut down to fit in the queuing space. The amount cut may not be accounted for fully in the adjacent lane performance statistics. You may wish to change the short lane to a full lane to investigate the extent of this effect.

Castillos de la Monta?as
Int. PR-3, PR-925 & Rampa PR-53; Hora Pico AM, Transito Actual
Intersection ID: 5
Actuated Isolated Signals, Cycle Time = 100

Table S.15 - CAPACITY AND LEVEL OF SERVICE

Mov No.	Mov Typ	Green Ratio (g/C) 1st grn	Green Ratio (g/C) 2nd grn	Total Flow (veh /h)	Total Cap. (veh /h)	Deg. of Satn (v/c)	Aver. Delay (sec)	LOS
West: PR-3 West Approach								
12	L	0.120		236	209	1.127	161.7	F
11	T	0.300		1016	1298<	0.783	42.1	D
13	R (Un2)	0.300	0.520	171	218<	0.784	43.6	D
				1423	1726	1.127	62.1	E
South: Ramp PR-53 South Approach								
32	L	0.300		488	705<	0.692	47.8	D
33	TR	0.300*		140	202<	0.692	45.8	D
				628	907	0.692	47.3	D
East: PR-3 East Approach								
22	L	0.120*		250	211	1.181	180.4	F
21	LT	0.300*		1456E	1673	0.871	51.6	D
23	R (Con)	1.000		238	1582	0.150	9.2	A#
				1944	3466	1.181	62.9	E
North: PR-925 North Approach								
42	L	0.120*		85	217	1.368*	252.7	F
43	TR (Un1)	0.120		206	191	1.075	148.1	F
				291	408	1.368	178.7	F
ALL VEHICLES:				4497	6507	1.368	65.0	E
INTERSECTION (persons):				5396	6507	1.368	65.0	

Level of Service calculations are based on
average control delay including geometric delay (HCM criteria),
independent of the current delay definition used.
For the criteria, refer to the "Level of Service" topic in the
aaSIDRA Output Guide or the Output section of the on-line help.

Level Of Service for continuous movements based on density
< Reduced capacity due to a short lane effect
* Maximum v/c ratio, or critical green periods
E "Excess" flow from the short lane of an adjacent movement added to normal flow

Castillos de la Monta?as
Int. PR-3, PR-925 & Rampa PR-53; Hora Pico AM, Transito Actual
Intersection ID: 5

Table S.23 - SENSITIVITY ANALYSIS RESULTS

Performance Measure	Smallest Value	Param Scale
Degree of Satn	1.063	115
Average Delay	65.0	60
Stop Rate	0.82	120
Max. Queue for Any Movement	32.6	50
Perf. Index	283.4	50
Cost total	1372.8	60

Performance Measure	Largest Value	Param Scale
Total Vehicle Cap.	6663	95
Prac. Spare Cap.	-15	115

Castillos de la Monta?as
Int. PR-3, PR-925 & Rampa PR-53; Hora Pico AM, Transito Actual
Intersection ID: 5

Scaled sensitivity parameter: Maximum Green

Table V.23 - INTERSECTION SUMMARY FOR VARIABLE PARAMETER SCALE

Param Scale (%)	Cycle Time (sec)	Total Veh. Cap.	Intersn Deg. of Satn	Prac. Spare Cap.	Aver. Delay (sec)	Stop Rate	Longest Queue (veh)	Perf. Index	Cost Total $/h
50	86	6457	1.390	-35	65.2	0.92	32.6	283.4	1379.2
55	94	6496	1.400	-36	65.3	0.90	34.3	289.7	1376.7
60	100	6507	1.368	-34	65.0	0.89	34.3	294.3	1372.8
65	108	6535	1.383	-35	65.7	0.88	36.3	301.9	1378.5
70	114	6541	1.361	-34	66.0	0.87	36.6	307.6	1380.4
75	121	6585	1.360	-34	66.1	0.85	37.8	312.9	1379.1
80	127	6586	1.324	-32	66.5	0.85	37.3	318.9	1382.7
85	134	6623	1.309	-31	66.6	0.84	37.7	324.5	1383.0
90	140	6622	1.280	-30	67.1	0.83	37.4	330.8	1388.2
95	144	6663	1.224	-26	66.3	0.82	36.5	332.2	1378.5
100	149	6630	1.188	-24	67.3	0.82	37.8	339.1	1389.4
105	153	6618	1.143	-21	67.5	0.82	38.6	343.1	1391.6
110	157	6608	1.101	-18	68.2	0.82	39.4	348.3	1400.0
115	161	6597	1.063	-15	68.9	0.82	40.1	353.7	1409.4
120	166	6544	1.135	-21	70.4	0.82	41.3	360.3	1423.8

--- End of aaSIDRA Output ---

Akcelik & Associates Pty Ltd - aaSIDRA 2.0.0.205

FJRP
Francisco J. Reyes P Registered User No. 50310
Licence Type: Professional, Single Computer

Time and Date of Analysis 12:46 AM, Mar 23,2005

Filename: C:\Documents and Settings\Francisco\My Documents\Francisco\Humacao\Sea View\Sidra\925-3PMP.OUT

Castillos de la Monta?a
Intersecci?n PR-925 & PR-3; Hora Pico PM, Transito actual
Intersection ID: 1

aaTraffic SIDRA US Highway Capacity Manual (2000) Version

RUN INFORMATION

* Basic Parameters:
  Intersection Type: Unsignalised - Two-Way Stop Control
  Driving on the right-hand side of the road
  Input data specified in US units
  Default Values File No. 11
  Peak flow period (for performance): 15 minutes
  Unit time (for volumes): 60 minutes (Total Flow Period)
  Delay definition: Control delay
                    Geometric delay included
  HCM Delay and Queue Models option selected
  Level of Service based on: Delay (HCM method)
  Queue definition: Back of queue, 95th Percentile

Castillos de la Monta?a
Intersecci?n PR-925 & PR-3; Hora Pico PM, Transito actual
Intersection ID: 1

DEFAULT PARAMETERS

Default values for some of the important general parameters:
(Default Values File: DEF11.SDF)

1. Basic saturation flow: 1900 tcu/h

   This value applies mainly to signalised intersections. For roundabouts and sign-controlled intersections, it is used for determining capacity of priority and continuous movements.

2. Through car equivalents for signalised intersections

	LEFT		THROUGH		RIGHT	
	LV	HV	LV	HV	LV	HV
Normal	1.053	2.000	1.000	2.000	1.176	2.000
Restricted	1.303	2.500			1.426	2.500

3. Opposed turn parameters (Two-Way Stop Control)

	Crit. Gap	Fol.up Hdway	Min. Deps	% Exit Flow Opposing
Left turns :	7.5	3.5	2.0	50
Through :	6.5	4.0	2.0	50
Right turns:	6.9	3.3	2.0	50
Opposed turns from priority road:				
	4.1	2.2	2.0	0

4. Cruise speed= 40 mi/h, Approach Distance= 1800 ft

5. Queue space per vehicle in feet
   Light vehicles: 25.0 Heavy vehicles: 45.0

A full list of input data defaults and ranges is given in the Input Guide part of aaSIDRA User Guide.

Castillos de la Monta?a
Intersecci?n PR-925 & PR-3; Hora Pico PM, Transito actual
Intersection ID: 1
Stop Sign Controlled Intersection

Table S.0 - TRAFFIC FLOW DATA

Mov No.	Left LV	Left HV	Through LV	Through HV	Right LV	Right HV	Flow Scale	Peak Flow Factor
VEHICLES Demand flows in veh/hour as used by the program								
West: PR-3 West Approach								
12	127	0	613	9	0	0	1.00	0.96
East: PR-3 East Approach								
22	0	0	61	0	0	0	1.00	0.96
23	0	0	0	0	467	10	1.00	0.96
North: PR-925 North Approach								
42	39	0	0	0	0	0	1.00	0.96
43	0	0	0	0	74	0	1.00	0.96

Based on unit time = 60 minutes.
Flow Scale and Peak Hour Factor effects included in flow values.

Castillos de la Monta?a
Intersecci?n PR-925 & PR-3; Hora Pico PM, Transito actual
Intersection ID: 1
Stop Sign Controlled Intersection

Table S.2 - MOVEMENT CAPACITY PARAMETERS

Mov No.	Dem Flow (veh /h)	Total Opng Flow (veh/h)	%HV	Adjust. Opng Flow (pcu/h)	Total Cap. (veh /h)	Prac. Deg. Satn xp	Prac. Spare Cap. (%)	Lane Util (%)	Deg. Satn x
West: PR-3 West Approach									
12 LT	749	61	0.0	61	1810	0.80	93	100	0.414*

East: PR-3 East Approach									
22	T	61	0		184	0.80	141	100	0.332
23	R	477	0		1438	0.80	141	100	0.332
North: PR-925 North Approach									
42	L	39	921+	1.5	921	141	0.80	189	100	0.277
43	R	74	300+	1.7	300	268	0.80	190	100	0.276

+ Percentage of exiting flow included in total opposing flow

Castillos de la Monta?a
Intersecci?n PR-925 & PR-3; Hora Pico PM, Transito actual
Intersection ID: 1
Stop Sign Controlled Intersection

Table S.3 - INTERSECTION PARAMETERS

Intersection Level of Service	=	A
Worst movement Level of Service	=	C
Average intersection delay (s)	=	5.7
Largest average movement delay (s)	=	17.1
Largest back of queue, 95% (ft)	=	92
Performance Index	=	21.49
Degree of saturation (highest)	=	0.414
Practical Spare Capacity (lowest)	=	93 %
Total vehicle capacity, all lanes (veh/h)	=	3841
Total vehicle flow (veh/h)	=	1400
Total person flow (pers/h)	=	1680
Total vehicle delay (veh-h/h)	=	2.23
Total person delay (pers-h/h)	=	2.67
Total effective vehicle stops (veh/h)	=	535
Total effective person stops (pers/h)	=	642
Total vehicle travel (veh-mi/h)	=	581.6
Total cost ($/h)	=	222.88
Total fuel (ga/h)	=	25.4
Total CO2 (kg/h)	=	240.23

Castillos de la Monta?a
Intersecci?n PR-925 & PR-3; Hora Pico PM, Transito actual
Intersection ID: 1
Stop Sign Controlled Intersection

Table S.8 - LANE FLOW AND CAPACITY INFORMATION

Lan No.	Mov No.	Dem Flow (veh/h) Lef	Thru	Rig	Tot	Min Cap (veh /h)	Tot Cap (veh /h)	Deg. Satn x	Lane Util %
West: PR-3 West Approach									
1	LT	12	127	622	0 749	539	1810	0.414	100
East: PR-3 East Approach									
1	TR	22,	0	61	477 538	134	1621	0.332	100

	23								
North: PR-925 North Approach									
1 LR	42, 43	39	0	74	113	113	409	0.276	100

The capacity value for priority and continuous movements is obtained by adjusting the basic saturation flow for heavy vehicle and turning vehicle effects. Saturation flow scale applies if specified.

Castillos de la Monta?a
Intersecci?n PR-925 & PR-3; Hora Pico PM, Transito actual
Intersection ID: 1
Stop Sign Controlled Intersection

Table S.10 - MOVEMENT CAPACITY AND PERFORMANCE SUMMARY

Mov No.	Mov Typ	Dem Flow (veh /h)	Total Cap. (veh /h)	Lane Util (%)	Deg. Satn x	Aver. Delay (sec)	Eff. Stop Rate	95% Back of Queue (veh)	Perf. Index
West: PR-3 West Approach									
12	LT	749	1810	100	0.414*	2.0	0.11	3.6	9.85
East: PR-3 East Approach									
22	T	61	184	100	0.332	0.0	0.00	0.0	0.64
23	R	477	1438	100	0.332	9.7	0.72	0.0	8.11
North: PR-925 North Approach									
42	L	39	141	100	0.277	17.1	1.02	1.8	1.01
43	R	74	268	100	0.276	17.1	0.92	1.8	1.88

* Maximum degree of saturation

Castillos de la Monta?a
Intersecci?n PR-925 & PR-3; Hora Pico PM, Transito actual
Intersection ID: 1
Stop Sign Controlled Intersection

Table S.14 - SUMMARY OF INPUT AND OUTPUT DATA

Lane No.	Demand Flow (veh/h) L	T	R	Tot	%HV	Adj. Basic Satf.	Eff Grn (secs) 1st	2nd	Deg Sat x	Aver. Delay (sec)	Longest Queue (ft)	Shrt Lane (ft)
West: PR-3 West Approach												
1 LT	127	622		749	1				0.414	2.0	92	
	127	622	0	749	1				0.414	2.0	92	
East: PR-3 East Approach												
1 TR		61	477	538	2				0.332	8.6	0	

	0	61	477	538	2	0.332	8.6	
North: PR-925 North Approach								
1 LR	39		74	113	0	0.276	17.1	46
	39	0	74	113	0	0.276	17.1	46

ALL VEHICLES	Total Flow	% HV	Max X	Aver. Delay	Max Queue
	1400	1	0.414	5.7	92

Total flow period = 60 minutes. Peak flow period = 15 minutes.

Queue values in this table are 95% back of queue (feet).

Note: Basic Saturation Flows are not adjusted at roundabouts or sign-controlled intersections and apply only to continuous lanes.

Castillos de la Monta?a
Intersecci?n PR-925 & PR-3; Hora Pico PM, Transito actual
Intersection ID: 1
Stop Sign Controlled Intersection

Table S.15 - CAPACITY AND LEVEL OF SERVICE

Mov No.	Mov Typ	Total Flow (veh /h)	Total Cap. (veh /h)	Deg. of Satn (v/c)	Aver. Delay (sec)	LOS
West: PR-3 West Approach						
12	LT	749	1810	0.414*	2.0	A
		749	1810	0.414	2.0	A
East: PR-3 East Approach						
22	T	61	184	0.332	0.0	A
23	R	477	1438	0.332	9.7	A
		538	1622	0.332	8.6	A
North: PR-925 North Approach						
42	L	39	141	0.277	17.1	C
43	R	74	268	0.276	17.1	C
		113	409	0.277	17.1	C
ALL VEHICLES:		1400	3841	0.414	5.7	A

Level of Service calculations are based on average control delay including geometric delay (HCM criteria), independent of the current delay definition used.
For the criteria, refer to the "Level of Service" topic in the aaSIDRA Output Guide or the Output section of the on-line help.
* Maximum v/c ratio, or critical green periods

--- End of aaSIDRA Output ---

Akcelik & Associates Pty Ltd - aaSIDRA 2.0.0.205

FJRP
Francisco J. Reyes P Registered User No. 50310
Licence Type: Professional, Single Computer

Time and Date of Analysis 12:50 AM, Mar 21,2005

Filename: C:\Documents and Settings\Francisco\My Documents\Francisco\Humacao\Sea View\Sidra\CC-3PMP.OUT

Castillos de la Monta?a
Intrseccion PR-3 & acceso Ciudad Cristiana; Hora Pico PM, Transito Actual
Intersection ID: 2

aaTraffic SIDRA US Highway Capacity Manual (2000) Version

RUN INFORMATION
---

* Basic Parameters:
  Intersection Type: Unsignalised - Two-Way Stop Control
  Driving on the right-hand side of the road
  Input data specified in US units
  Default Values File No. 11
  Peak flow period (for performance): 15 minutes
  Unit time (for volumes): 60 minutes (Total Flow Period)
  Delay definition: Control delay
                Geometric delay included
  HCM Delay and Queue Models option selected
  Level of Service based on: Delay (HCM method)
  Queue definition: Back of queue, 95th Percentile

Castillos de la Monta?a
Intrseccion PR-3 & acceso Ciudad Cristiana; Hora Pico PM, Transito Actual
Intersection ID: 2

DEFAULT PARAMETERS

Default values for some of the important general parameters:
(Default Values File: DEF11.SDF)

1. Basic saturation flow: 1900 tcu/h

   This value applies mainly to signalised intersections. For roundabouts and sign-controlled intersections, it is used for determining capacity of priority and continuous movements.

2. Through car equivalents for signalised intersections

	LEFT		THROUGH		RIGHT	
	LV	HV	LV	HV	LV	HV
Normal	1.053	2.000	1.000	2.000	1.176	2.000
Restricted	1.303	2.500			1.426	2.500

3. Opposed turn parameters (Two-Way Stop Control)

	Crit. Gap	Fol.up Hdway	Min. Deps	% Exit Flow Opposing
Left turns :	7.5	3.5	2.0	50
Through :	6.5	4.0	2.0	50
Right turns:	6.9	3.3	2.0	50
Opposed turns from priority road:	4.1	2.2	2.0	0

4. Cruise speed= 40 mi/h, Approach Distance= 1800 ft

5. Queue space per vehicle in feet
   Light vehicles: 25.0 Heavy vehicles: 45.0

A full list of input data defaults and ranges is given in the Input Guide part of aaSIDRA User Guide.

Castillos de la Monta?a
Intrseccion PR-3 & acceso Ciudad Cristiana; Hora Pico PM, Transito Actual
Intersection ID: 2

Stop Sign Controlled Intersection

Table S.0 - TRAFFIC FLOW DATA

Mov No.	Left LV	Left HV	Through LV	Through HV	Right LV	Right HV	Flow Scale	Peak Flow Factor
VEHICLES Demand flows in veh/hour as used by the program								
West: PR-3 West Approach								
12	0	0	783	21	0	0	1.00	0.92
13	0	0	0	0	143	1	1.00	0.92
South: CC South Approach								
32	76	1	0	0	0	0	1.00	0.92
33	0	0	0	0	13	0	1.00	0.92
East: PR-3 East Approach								
22	37	2	696	23	0	0	1.00	0.92

Based on unit time = 60 minutes.
Flow Scale and Peak Hour Factor effects included in flow values.

Castillos de la Monta?a
Intrseccion PR-3 & acceso Ciudad Cristiana; Hora Pico PM, Transito Actual
Intersection ID: 2
Stop Sign Controlled Intersection

Table S.2 - MOVEMENT CAPACITY PARAMETERS

Mov No.	Dem Flow (veh /h)	Total Opng Flow (veh/h)	%HV	Adjust. Opng Flow (pcu/h)	Total Cap. (veh /h)	Prac. Deg. Satn xp	Prac. Spare Cap. (%)	Lane Util (%)	Deg. Satn x

West: PR-3 West Approach									
12	T	804	0			1535	0.80	53	100	0.524
13	R	144	0			275	0.80	53	100	0.524
South: CC South Approach										
32	L	77	1595+	2.8	1595	77	0.80	-20	100	1.000*
33	R	13	876+	2.5	876	296	0.80	1722	100	0.044
East: PR-3 East Approach										
22	LT	758	804	2.6	804	1696	0.80	79	100	0.447

\+ Percentage of exiting flow included in total opposing flow

---

Castillos de la Monta?a
Intrseccion PR-3 & acceso Ciudad Cristiana; Hora Pico PM, Transito Actual
Intersection ID: 2
Stop Sign Controlled Intersection

Table S.3 - INTERSECTION PARAMETERS

Intersection Level of Service	=	B
Worst movement Level of Service	=	F
Average intersection delay (s)	=	13.2
Largest average movement delay (s)	=	196.8
Largest back of queue, 95% (ft)	=	283
Performance Index	=	33.79
Degree of saturation (highest)	=	1.000
Practical Spare Capacity (lowest)	=	-20 %
Total vehicle capacity, all lanes (veh/h)	=	3879
Total vehicle flow (veh/h)	=	1796
Total person flow (pers/h)	=	2155
Total vehicle delay (veh-h/h)	=	6.61
Total person delay (pers-h/h)	=	7.93
Total effective vehicle stops (veh/h)	=	256
Total effective person stops (pers/h)	=	307
Total vehicle travel (veh-mi/h)	=	748.5
Total cost ($/h)	=	306.29
Total fuel (ga/h)	=	33.9
Total CO2 (kg/h)	=	321.31

Castillos de la Monta?a
Intrseccion PR-3 & acceso Ciudad Cristiana; Hora Pico PM, Transito Actual
Intersection ID: 2
Stop Sign Controlled Intersection

Table S.8 - LANE FLOW AND CAPACITY INFORMATION

Lan No.	Mov No.	Dem Flow (veh/h) Lef	Thru	Rig	Tot	Min Cap (veh /h)	Tot Cap (veh /h)	Deg. Satn x	Lane Util %
West: PR-3 West Approach									
1 TR	12, 13	0	804	144	948	948	1810	0.524	100

South: CC South Approach									
1 L	32	77	0	0	77	77	77	1.000	100
2 R	33	0	0	13	13	13	296	0.044	100
East: PR-3 East Approach									
1 LT	22	39	719	0	758	758	1696	0.447	100

The capacity value for priority and continuous movements is obtained by adjusting the basic saturation flow for heavy vehicle and turning vehicle effects. Saturation flow scale applies if specified.

Castillos de la Monta?a
Intrseccion PR-3 & acceso Ciudad Cristiana; Hora Pico PM, Transito Actual
Intersection ID: 2
Stop Sign Controlled Intersection

Table S.10 - MOVEMENT CAPACITY AND PERFORMANCE SUMMARY

Mov No.	Mov Typ	Dem Flow (veh /h)	Total Cap. (veh /h)	Lane Util (%)	Deg. Satn x	Aver. Delay (sec)	Eff. Stop Rate	95% Back of Queue (veh)	Perf. Index
West: PR-3 West Approach									
12	T	804	1535	100	0.524	0.0	0.00	0.0	8.39
13	R	144	275	100	0.524	9.6	0.72	0.0	2.45
South: CC South Approach									
32	L	77	77	100	1.000*	196.8	1.25	11.2	9.36
33	R	13	296	100	0.044	17.7	1.00	0.3	0.37
East: PR-3 East Approach									
22	LT	758	1696	100	0.447	9.2	0.06	9.3	13.23

* Maximum degree of saturation

Castillos de la Monta?a
Intrseccion PR-3 & acceso Ciudad Cristiana; Hora Pico PM, Transito Actual
Intersection ID: 2
Stop Sign Controlled Intersection

Table S.14 - SUMMARY OF INPUT AND OUTPUT DATA

Lane No.	Demand Flow (veh/h) L	T	R	Tot	%HV	Adj. Basic Satf.	Eff Grn (secs) 1st	2nd	Deg Sat x	Aver. Delay (sec)	Longest Queue (ft)	Shrt Lane (ft)
West: PR-3 West Approach												
1 TR		804	144	948	2				0.524	1.5	0	
	0	804	144	948	2				0.524	1.5		
South: CC South Approach												

1 L	77			77	1		1.000	196.8	283
2 R			13	13	0		0.044	17.7	8
	77	0	13	90	1		1.000	170.9	283
East: PR-3 East Approach									
1 LT	39	719		758	3		0.447	9.2	239
	39	719	0	758	3		0.447	9.2	239

ALL VEHICLES	Total Flow	% HV	Max X	Aver. Delay	Max Queue
	1796	3	1.000	13.2	283

Total flow period = 60 minutes. Peak flow period = 15 minutes.

Queue values in this table are 95% back of queue (feet).

Note: Basic Saturation Flows are not adjusted at roundabouts or sign-controlled intersections and apply only to continuous lanes.

Castillos de la Monta?a
Intrseccion PR-3 & acceso Ciudad Cristiana; Hora Pico PM, Transito Actual
Intersection ID: 2
Stop Sign Controlled Intersection

Table S.15 - CAPACITY AND LEVEL OF SERVICE

Mov No.	Mov Typ	Total Flow (veh /h)	Total Cap. (veh /h)	Deg. of Satn (v/c)	Aver. Delay (sec)	LOS
West: PR-3 West Approach						
12	T	804	1535	0.524	0.0	A
13	R	144	275	0.524	9.6	A
		948	1810	0.524	1.5	A
South: CC South Approach						
32	L	77	77	1.000*	196.8	F
33	R	13	296	0.044	17.7	C
		90	373	1.000	170.9	F
East: PR-3 East Approach						
22	LT	758	1696	0.447	9.2	A
		758	1696	0.447	9.2	A
ALL VEHICLES:		1796	3879	1.000	13.2	B

Level of Service calculations are based on average control delay including geometric delay (HCM criteria), independent of the current delay definition used.
For the criteria, refer to the "Level of Service" topic in the aaSIDRA Output Guide or the Output section of the on-line help.
* Maximum v/c ratio, or critical green periods

--- End of aaSIDRA Output ---

Akcelik & Associates Pty Ltd - aaSIDRA 2.0.0.205

FJRP
Francisco J. Reyes P Registered User No. 50310
Licence Type: Professional, Single Computer

Time and Date of Analysis 12:55 AM, Mar 21,2005

Filename: C:\Documents and Settings\Francisco\My Documents\Francisco\Humacao\Sea View\Sidra\Com-3PMP.OUT

Castillos de la Monta?a
Int. PR-3 & Acceso a Centro Comercial; Hora Pico PM, Transito actual
Intersection ID: 3

aaTraffic SIDRA US Highway Capacity Manual (2000) Version

RUN INFORMATION

Parameter sensitivity run: "Optimum" Maximum Green = 65.0 %

* Basic Parameters:
  Intersection Type: Signalised - Actuated Isolated
  For fully-actuated signal timings, the following specifications will be ignored:
    Any maximum cycle time specification
    Any user-given cycle time (unless phase times also given)
    User-given cycle and phase times (if variable flow scale run)
    Any variable cycle time specification
    Any green split priority specification
  Driving on the right-hand side of the road
  Input data specified in US units
  Default Values File No. 11
  Peak flow period (for performance): 15 minutes
  Unit time (for volumes): 60 minutes (Total Flow Period)
  Delay definition: Control delay
                    Geometric delay included
  HCM Delay and Queue Models option selected
  Level of Service based on: Delay (HCM method)
  Queue definition: Back of queue, 95th Percentile

* No. of Main (Timing-Capacity) Iterations = 7
  Comparison of last two iterations:
    Difference in intersection degree of satn = 0.0 %
    Difference in total vehicle capacity = 0.5 %
    Largest difference in eff. green times = 1 secs
    (max. value for stopping = 1 secs)
  Information on Previous Iteration:
    Cycle Time = 55
    Phase Times: 0, 17, 44
    Critical Movements: 12, 23(1st), 43(2nd)

* Movement 12 has large x because of short lanes.
  The degree of saturation of adjacent movement 11 is less than xp,
  hence this solution may be satisfactory.
  See Table S.7 for queue length, delay etc.

Castillos de la Monta?a

Int. PR-3 & Acceso a Centro Comercial; Hora Pico PM, Transito actual
Intersection ID: 3

DEFAULT PARAMETERS

Default values for some of the important general parameters:
(Default Values File: DEF11.SDF)

1. Basic saturation flow: 1900 tcu/h

   This value applies mainly to signalised intersections. For roundabouts and sign-controlled intersections, it is used for determining capacity of priority and continuous movements.

2. Through car equivalents for signalised intersections

	LEFT		THROUGH		RIGHT	
	LV	HV	LV	HV	LV	HV
Normal	1.053	2.000	1.000	2.000	1.176	2.000
Restricted	1.303	2.500			1.426	2.500

3. Opposed turn parameters (Signalised intersection)

	Crit. Gap	Fol.up Hdway	Deps at End	% Exit Flow Opposing
Left turns :	4.5	2.5	2.0	0
Right turns:	4.0	2.4	2.5	0

4. Cruise speed= 40 mi/h, Approach Distance= 1800 ft

5. Queue space per vehicle in feet
   Light vehicles: 25.0 Heavy vehicles: 45.0

A full list of input data defaults and ranges is given in the Input Guide part of aaSIDRA User Guide.

Castillos de la Monta?a
Int. PR-3 & Acceso a Centro Comercial; Hora Pico PM, Transito actual
Intersection ID: 3
Actuated Isolated Signals, Cycle Time = 54

Table S.0 - TRAFFIC FLOW DATA

Mov No.	Left LV	Left HV	Through LV	Through HV	Right LV	Right HV	Flow Scale	Peak Flow Factor
VEHICLES Demand flows in veh/hour as used by the program								
West: PR-3 West Approach								
12	469	1	0	0	0	0	1.00	0.94
11	0	0	884	28	0	0	1.00	0.94
East: PR-3 East Approach								
21	0	0	948	26	0	0	1.00	0.94
23	0	0	0	0	44	0	1.00	0.94
North: Cent. Com. North Approach								

42	66	0	0	0	0	0	1.00	0.94
43	0	0	0	0	381	6	1.00	0.94

Based on unit time = 60 minutes.
Flow Scale and Peak Hour Factor effects included in flow values.

Castillos de la Monta?a
Int. PR-3 & Acceso a Centro Comercial; Hora Pico PM, Transito actual
Intersection ID: 3
Actuated Isolated Signals, Cycle Time = 54

Table S.1 - MOVEMENT PHASE AND TIMING PARAMETERS

Mov No.	Mov Typ	PHASE MATRIX First Green Fr	To	Op	Pr	Second Green Fr	To	Op	Pr	Lost Tim 1st Grn	Lost Tim 2nd Grn	Req.Mov.Time 1st Grn	Req.Mov.Time 2nd Grn	Eff. Grn 1st Grn	Eff. Grn 2nd Grn
West: PR-3 West Approach															
12 L		*A	B							4		17.0Max		13	
11 LT		B	D							4		25.5		23	
East: PR-3 East Approach															
21 T		B	D							4		25.9		23	
23 R	(Un2)	*B	D			D	B	R		4	15	25.9	25.0	23	12
North: Cent. Com. North Approach															
42 L		D	A							4		10.0Min		6	
43 R	(Un1)	A	D	R		*D	A			16	4	36.9	10.0Min	28	6

Current Phase Sequence No.: 1
Input phase sequence: A B D
Output phase sequence: A B D

Movement Types:
- Ped Pedestrian
- Dum Dummy
- Und Undetected in both green periods
- Un1 Undetected in 1st green period
- Un2 Undetected in 2nd green period

Under heading 'Op':
- L "Left" turns are opposed
- R "Right" turns are opposed
- LR "Left and Right" opposed
- C "Constant" saturation flow

Castillos de la Monta?a
Int. PR-3 & Acceso a Centro Comercial; Hora Pico PM, Transito actual
Intersection ID: 3
Actuated Isolated Signals, Cycle Time = 54

Table S.2 - MOVEMENT CAPACITY PARAMETERS

Mov No.	Dem Flow (veh /h)	Satn Flow 1st Grn	Satn Flow 2nd Grn	Flow Ratio 1st Grn	Flow Ratio 2nd Grn	Total Cap. (veh /h)	Prac. Deg. Satn xp	Prac. Spare Cap. (%)	Lane Util (%)	Deg. Satn x
West: PR-3 West Approach										
12 L	388	1612<		0.241		388	0.90	-10	100	1.000*

11	LT	994E	3680		0.270		1567	0.90	42	100	0.634
East: PR-3 East Approach											
21	T	974	3503		0.278		1492	0.90	38	100	0.653
23	R	44	0	303	0.316	0.144	68	0.90	39	100	0.649
North: Cent. Com. North Approach											
42	L	66	1805		0.037		201	0.90	173	100	0.329
43	R	387	925	1598	0.279	0.080	657	0.90	53	100	0.589

E "Excess" flow from the short lane of an adjacent movement added to normal flow

< Reduced saturation flow due to a short lane effect

Movement 12 has large x because of short lanes.
The degree of saturation of adjacent movement 11 is less than xp, hence this solution may be satisfactory.
See Table S.7 for queue length, delay etc.

Castillos de la Monta?a
Int. PR-3 & Acceso a Centro Comercial; Hora Pico PM, Transito actual
Intersection ID: 3
Actuated Isolated Signals, Cycle Time = 54

Table S.3 - INTERSECTION PARAMETERS

Crit Mov No.	App. & Turn	Green Period	Phases Fr	Phases To	Adjusted Lost Time	Adjusted Flow Ratio	Required Grn Time Ratio	Required Movement Time
12	W_L		A	B	17	-	-	17.0Max
23	E_R	1st	B	D	4	0.316	0.405	25.9
43	N_R	2nd	D	A	10	-	-	10.0Min
				Total:	31	0.316	0.405	52.9

- Flow ratio not used for cycle time calculations and the adjusted lost time equals the required movement time (=Min or Max as shown in Table S.1)

Cycle Time:

Minimum	Maximum	Practical	Chosen
30	NA	53	54

Intersection Level of Service	=	B
Worst movement Level of Service	=	D
Average intersection delay (s)	=	19.2
Largest average movement delay (s)	=	36.7
Largest back of queue, 95% (ft)	=	366
Performance Index	=	97.69
Degree of saturation (highest)	=	1.000
Practical Spare Capacity (lowest)	=	-10 %
Total vehicle capacity, all lanes (veh/h)	=	4373
Total vehicle flow (veh/h)	=	2853
Total person flow (pers/h)	=	3424
Total vehicle delay (veh-h/h)	=	15.18
Total person delay (pers-h/h)	=	18.21

Total effective vehicle stops (veh/h)	=	2170
Total effective person stops (pers/h)	=	2604
Total vehicle travel (veh-mi/h)	=	1187.7
Total cost ($/h)	=	544.45
Total fuel (ga/h)	=	61.7
Total CO2 (kg/h)	=	584.80

Castillos de la Monta?a
Int. PR-3 & Acceso a Centro Comercial; Hora Pico PM, Transito actual
Intersection ID: 3
Actuated Isolated Signals, Cycle Time = 54

Table S.4 - PHASE INFORMATION

Phase No.	Change Time	Green Start	Displayed Green	Grn+Intgrn Secs	Prop.
A	0	4	13	17	0.315
B	17	21	23	27	0.500
D	44	48	6	10	0.185

Current Phase Sequence No.: 1
Input phase sequence: A B D
Output phase sequence: A B D

Castillos de la Monta?a
Int. PR-3 & Acceso a Centro Comercial; Hora Pico PM, Transito actual
Intersection ID: 3
Actuated Isolated Signals, Cycle Time = 54

Table S.8 - LANE FLOW AND CAPACITY INFORMATION

Lan No.	Mov No.	Dem Flow (veh/h) Lef	Thru	Rig	Tot	Lane Width (ft)	Saturation Adj. Basic (tcu)	Aver 1st (veh)	Flow Aver 2nd (veh)	End Cap (veh /h)	Tot Cap (veh /h)	Deg. Satn x	Lane Util %
West: PR-3 West Approach													
1 L	12	388	0	0	388	12.0	1900	1612<	0	0	388	1.000	100
2 LT	11	82E	414	0	496	12.0	1900	1836	0	0	782	0.634	100
3 T	11	0	498	0	498	12.0	1900	1843	0	0	785	0.634	100
East: PR-3 East Approach													
1 T	21	0	515	0	515	12.0	1900	1851	0	0	788	0.653	100
2 TR	21, 23	0	459	44	503	12.0	1900	345	1795	67	771	0.653	100
North: Cent. Com. North Approach													
1 L	42	66	0	0	66	12.0	1900	1805	0	0	201	0.329	100
2 R	43	0	0	387	387	12.0	1900	925	1598	67	657	0.589	100

E "Excess" flow from back of an adjacent short lane
< Reduced saturation flow due to a short lane effect

Basic Saturation Flow in this table is adjusted for lane width, approach grade, parking manoeuvres and number of buses stopping. Saturation flow

scale applies if specified.

Castillos de la Monta?a
Int. PR-3 & Acceso a Centro Comercial; Hora Pico PM, Transito actual
Intersection ID: 3
Actuated Isolated Signals, Cycle Time = 54

Table S.10 - MOVEMENT CAPACITY AND PERFORMANCE SUMMARY

Mov No.	Mov Typ	Dem Flow (veh /h)	Total Cap. (veh /h)	Lane Util (%)	Deg. Satn x	Eff. Grn 1st Grn	Eff. Grn 2nd Grn	Aver. Delay (sec)	Eff. Stop Rate	95% Back of Queue (veh)	Perf. Index
West: PR-3 West Approach											
12	L	388	388<	100	1.000*	13*		32.8	0.85	12.3	15.78
11	LT	994E	1567	100	0.634	23		15.7	0.72	13.7	33.10
East: PR-3 East Approach											
21	T	974	1492	100	0.653	23		16.9	0.74	14.3	32.96
23	R (Un2)	44	68	100	0.649	23*	12	27.3	0.87	13.9	1.64
North: Cent. Com. North Approach											
42	L	66	201	100	0.329	6		36.7	0.75	2.4	2.79
43	R (Un1)	387	657	100	0.589	28	6*	16.1	0.82	7.8	11.42

E "Excess" flow from the short lane of an adjacent movement added to normal flow
< Reduced capacity due to a short lane effect
* Maximum degree of saturation, or critical green periods

Castillos de la Monta?a
Int. PR-3 & Acceso a Centro Comercial; Hora Pico PM, Transito actual
Intersection ID: 3
Actuated Isolated Signals, Cycle Time = 54

Table S.14 - SUMMARY OF INPUT AND OUTPUT DATA

Lane No.	Demand Flow (veh/h) L	T	R	Tot	%HV	Adj. Basic Satf.	Eff Grn (secs) 1st	2nd	Deg Sat x	Aver. Delay (sec)	Longest Queue (ft)	Shrt Lane (ft)
West: PR-3 West Approach												
1 L	388			388	0	1900	13		1.000	32.8r	307*	160
2 LT	388	414		496	3	1900	23		0.634	15.7	349	
3 T		498		498	3	1900	23		0.634	15.7	352	
	470	912	0	1382	2				1.000	20.5	352	
East: PR-3 East Approach												
1 T		515		515	3	1900	23		0.653	16.1	366	
2 TR		459	44	503	2	1900	1	23	0.653	18.5	354	
	0	974	44	1018	3				0.653	17.3	366	

North: Cent. Com. North Approach

1 L	66			66	0	1900	6		0.329	36.7	60
2 R			387	387	2	1900	28	6	0.589	16.1	197
	66	0	387	453	1				0.589	19.1	197

ALL VEHICLES	Total Flow	% HV	Cycle Time	Max X	Aver. Delay	Max Queue
	2853	2	54	1.000	19.2	366

Total flow period = 60 minutes. Peak flow period = 15 minutes.

Queue values in this table are 95% back of queue (feet).

Note: Basic Saturation Flows (in through car units) have been adjusted for grade, lane widths, parking manoeuvres and bus stops.

* Queue length exceeds short lane length due to specification of a percentile queue in the aaSIDRA Configuration File. For calculation of this statistic, you may specify the lane with full length.

r Delay, stops and queue length for this lane have been cut down to fit in the queuing space. The amount cut may not be accounted for fully in the adjacent lane performance statistics. You may wish to change the short lane to a full lane to investigate the extent of this effect.

Castillos de la Monta?a
Int. PR-3 & Acceso a Centro Comercial; Hora Pico PM, Transito actual
Intersection ID: 3
Actuated Isolated Signals, Cycle Time = 54

Table S.15 - CAPACITY AND LEVEL OF SERVICE

Mov No.	Mov Typ	Green Ratio (g/C) 1st grn	Green Ratio (g/C) 2nd grn	Total Flow (veh /h)	Total Cap. (veh /h)	Deg. of Satn (v/c)	Aver. Delay (sec)	LOS
West: PR-3 West Approach								
12 L		0.241*		388	388<	1.000*	32.8	C
11 LT		0.426		994E	1567	0.634	15.7	B
				1382	1955	1.000	20.5	C
East: PR-3 East Approach								
21 T		0.426		974	1492	0.653	16.9	B
23 R	(Un2)	0.426*	0.222	44	68	0.649	27.3	C
				1018	1560	0.653	17.3	B
North: Cent. Com. North Approach								
42 L		0.111		66	201	0.329	36.7	D
43 R	(Un1)	0.519	0.111*	387	657	0.589	16.1	B
				453	858	0.589	19.1	B
ALL VEHICLES:				2853	4373	1.000	19.2	B

INTERSECTION (persons):	3424	4373	1.000	19.2

Level of Service calculations are based on
average control delay including geometric delay (HCM criteria),
independent of the current delay definition used.
For the criteria, refer to the "Level of Service" topic in the
aaSIDRA Output Guide or the Output section of the on-line help.

< Reduced capacity due to a short lane effect
* Maximum v/c ratio, or critical green periods
E "Excess" flow from the short lane of an adjacent movement added to normal flow

---

Castillos de la Monta?a
Int. PR-3 & Acceso a Centro Comercial; Hora Pico PM, Transito actual
Intersection ID: 3

Table S.23 - SENSITIVITY ANALYSIS RESULTS

Performance Measure	Smallest Value	Param Scale
Degree of Satn	1.000	115
Average Delay	19.2	65
Stop Rate	0.76	65
Max. Queue for Any Movement	14.3	65
Perf. Index	97.7	65
Cost total	544.4	65

Performance Measure	Largest Value	Param Scale
Total Vehicle Cap.	4456	55
Prac. Spare Cap.	-10	115

Castillos de la Monta?a
Int. PR-3 & Acceso a Centro Comercial; Hora Pico PM, Transito actual
Intersection ID: 3

Scaled sensitivity parameter: Maximum Green

Table V.23 - INTERSECTION SUMMARY FOR VARIABLE PARAMETER SCALE

Param Scale (%)	Cycle Time (sec)	Total Veh. Cap.	Intersn Deg. of Satn	Prac. Spare Cap.	Aver. Delay (sec)	Stop Rate	Longest Queue (veh)	Perf. Index	Cost Total $/h
50	63	4443	1.000	-10	24.5	0.81	19.1	112.4	573.5
55	62	4456	1.000	-10	22.6	0.79	17.8	108.4	559.0
60	59	4413	1.000	-10	21.6	0.78	16.1	104.8	566.2
65	54	4373	1.000	-10	19.2	0.76	14.3	97.7	544.4
70	55	4316	1.000	-10	19.7	0.77	14.9	99.2	549.5
75	56	4263	1.000	-10	20.3	0.77	15.4	101.0	555.1
80	58	4269	1.000	-10	20.5	0.77	15.8	102.2	557.3

85	59	4219	1.000	-10	21.2	0.78	16.3	103.9	563.0
90	60	4172	1.000	-10	21.8	0.78	16.8	105.6	568.6
95	63	4233	1.000	-10	21.7	0.77	17.0	106.6	568.2
100	63	4136	1.000	-10	22.8	0.79	17.6	108.7	577.3
105	65	4145	1.000	-10	23.1	0.79	18.0	110.1	580.1
110	66	4103	1.000	-10	23.8	0.79	18.5	111.8	586.1
115	68	4113	1.000	-10	24.1	0.79	18.9	113.2	588.8
120	70	4122	1.000	-10	24.4	0.79	19.2	114.5	591.2

--- End of aaSIDRA Output ---

Akcelik & Associates Pty Ltd - aaSIDRA 2.0.0.205

FJRP
Francisco J. Reyes P Registered User No. 50310
Licence Type: Professional, Single Computer

Time and Date of Analysis 1:51 AM, Mar 23,2005

Filename: C:\Documents and Settings\Francisco\My Documents\Francisco\Humacao\Sea View\Sidra\53-VH-3PMP.OUT

Castillos de la Monta?a
InT. PR-3, Rampa PR-53 & Acceso V.H.; Hora Pico PM, Transito Actual
Intersection ID: 4

aaTraffic SIDRA US Highway Capacity Manual (2000) Version

RUN INFORMATION

Parameter sensitivity run: "Optimum" Maximum Green = 80.0 %

* Basic Parameters:
  Intersection Type: Signalised - Actuated Isolated
  For fully-actuated signal timings, the following specifications will be ignored:
    Any maximum cycle time specification
    Any user-given cycle time (unless phase times also given)
    User-given cycle and phase times (if variable flow scale run)
    Any variable cycle time specification
    Any green split priority specification
  Driving on the right-hand side of the road
  Input data specified in US units
  Default Values File No. 11
  Peak flow period (for performance): 15 minutes
  Unit time (for volumes): 60 minutes (Total Flow Period)
  Delay definition: Control delay
                    Geometric delay included
  HCM Delay and Queue Models option selected
  Level of Service based on: Delay (HCM method)
  Queue definition: Back of queue, 95th Percentile

* No. of Main (Timing-Capacity) Iterations = 3
  Comparison of last two iterations:
    Difference in intersection degree of satn = 0.0 %
    Difference in total vehicle capacity   = 0.2 %
    Largest difference in eff. green times = 1 secs
    (max. value for stopping = 1 secs)
  Information on Previous Iteration:
    Cycle Time = 120
    Phase Times: 0, 20, 64, 99
    Critical Movements: 12, 21, 41, 31

Castillos de la Monta?a
InT. PR-3, Rampa PR-53 & Acceso V.H.; Hora Pico PM, Transito Actual
Intersection ID: 4

DEFAULT PARAMETERS

Default values for some of the important general parameters:
(Default Values File: DEF11.SDF)

1. Basic saturation flow: 1900 tcu/h

   This value applies mainly to signalised intersections. For roundabouts and sign-controlled intersections, it is used for determining capacity of priority and continuous movements.

2. Through car equivalents for signalised intersections

	LEFT		THROUGH		RIGHT	
	LV	HV	LV	HV	LV	HV
Normal	1.053	2.000	1.000	2.000	1.176	2.000
Restricted	1.303	2.500			1.426	2.500

3. Opposed turn parameters (Signalised intersection)

	Crit. Gap	Fol.up Hdway	Deps at End	% Exit Flow Opposing
Left turns :	4.5	2.5	2.0	0
Right turns:	4.0	2.4	2.5	0

4. Cruise speed= 40 mi/h, Approach Distance= 1800 ft

5. Queue space per vehicle in feet
   Light vehicles: 25.0 Heavy vehicles: 45.0

A full list of input data defaults and ranges is given in the Input Guide part of aaSIDRA User Guide.

Castillos de la Monta?a
InT. PR-3, Rampa PR-53 & Acceso V.H.; Hora Pico PM, Transito Actual
Intersection ID: 4
Actuated Isolated Signals, Cycle Time = 119

Table S.0 - TRAFFIC FLOW DATA

Mov No.	Left LV	Left HV	Through LV	Through HV	Right LV	Right HV	Flow Scale	Peak Flow Factor
VEHICLES	Demand flows in veh/hour as used by the program							
West: PR-. West Approach								
12	243	0	0	0	0	0	1.00	0.97
11	0	0	853	18	0	0	1.00	0.97
13	0	0	0	0	260	0	1.00	0.97
South: South Approach								
32	190	0	0	0	0	0	1.00	0.97
31	0	0	41	0	0	0	1.00	0.97
33	0	0	0	0	72	0	1.00	0.97
East: PR-3 East Approach								
22	47	0	0	0	0	0	1.00	0.97
21	0	0	1028	13	0	0	1.00	0.97
23	0	0	0	0	73	0	1.00	0.97

North: Ramp PR-53 North Approach								
42	258	6	0	0	0	0	1.00	0.97
41	0	0	69	1	0	0	1.00	0.97
43	0	0	0	0	335	7	1.00	0.97

Based on unit time = 60 minutes.
Flow Scale and Peak Hour Factor effects included in flow values.

Castillos de la Monta?a
InT. PR-3, Rampa PR-53 & Acceso V.H.; Hora Pico PM, Transito Actual
Intersection ID: 4
Actuated Isolated Signals, Cycle Time = 119

Table S.1 - MOVEMENT PHASE AND TIMING PARAMETERS

Mov No.	Mov Typ	PHASE MATRIX First Green Fr	To	Op	Pr	Second Green Fr	To	Op	Pr	Lost Tim 1st Grn	Lost Tim 2nd Grn	Req.Mov.Time 1st Grn	Req.Mov.Time 2nd Grn	Eff. Grn 1st Grn	Eff. Grn 2nd Grn
West: PR-. West Approach															
12 L		*A	B							4		20.0Max		16	
11 LT		B	C							4		41.5		40	
13 R	(Und)	B	C			C	B	R		4	6	44.0Max	30.0Min	40	69
South: South Approach															
32 L		*D	A							4		20.0Max		16	
31 T		D	A							4		19.8		16	
33 R	(Und)	A	D	R		D	A			28	4	30.0Min	16.6	71	16
East: PR-3 East Approach															
22 L		A	B							4		11.7		16	
21 T		*B	C							4		44.0Max		40	
23 R	(Und)	B	C			C	B	R		4	5	44.0Max	30.0Min	40	70
North: Ramp PR-53 North Approach															
42 L		C	D							4		20.0Max		31	
41 T		*C	D							4		34.8		31	
43 R	(Und)	C	D			D	C	R		4	37	44.0Max	44.0Max	31	47

Current Phase Sequence No.: 1
Input phase sequence: A B C D
Output phase sequence: A B C D

Movement Types:
- Ped Pedestrian
- Dum Dummy
- Und Undetected in both green periods
- Un1 Undetected in 1st green period
- Un2 Undetected in 2nd green period

Under heading 'Op':
- L "Left" turns are opposed
- R "Right" turns are opposed
- LR "Left and Right" opposed
- C "Constant" saturation flow

Castillos de la Monta?a
InT. PR-3, Rampa PR-53 & Acceso V.H.; Hora Pico PM, Transito Actual
Intersection ID: 4
Actuated Isolated Signals, Cycle Time = 119

Table S.2 - MOVEMENT CAPACITY PARAMETERS

Mov No.	Dem Flow (veh /h)	Satn Flow 1st Grn	Satn Flow 2nd Grn	Flow Ratio 1st Grn	Flow Ratio 2nd Grn	Total Cap. (veh /h)	Prac. Deg. Satn xp	Prac. Spare Cap. (%)	Lane Util (%)	Deg. Satn x
West: PR-. West Approach										
12 L	243	1805		0.134		243	0.90	-10	100	1.000*
11 LT	871E	3723		0.234		1251	0.90	29	100	0.696
13 R	260	1234<	1220<	0.132	0.079	1122	0.90	288	100	0.232
South: South Approach										
32 L	190	1805		0.105		243	0.90	15	100	0.783
31 T	41	771		0.053		104	0.90	128	50	0.396
33 R	72	85	979	0.000	0.074	182	0.90	128	50	0.395
East: PR-3 East Approach										
22 L	47	1805		0.026		243	0.90	365	100	0.194
21 T	1041	3492		0.298		1174	0.90	1	100	0.887
23 R	73	224	12	0.315	0.197	82	0.90	2	100	0.886
North: Ramp PR-53 North Approach										
42 L	264	1620		0.163		422	0.90	44	100	0.626
41 T	70	429		0.163		112	0.90	44	100	0.626
43 R	342	0	1384	0.294	0.247	547	0.90	44	100	0.625

E "Excess" flow from the short lane of an adjacent movement added to normal flow

< Reduced saturation flow due to a short lane effect

Castillos de la Monta?a
InT. PR-3, Rampa PR-53 & Acceso V.H.; Hora Pico PM, Transito Actual
Intersection ID: 4
Actuated Isolated Signals, Cycle Time = 119

Table S.3 - INTERSECTION PARAMETERS

Crit Mov No.	App. & Turn	Green Period	Phases Fr	Phases To	Adjusted Lost Time	Adjusted Flow Ratio	Required Grn Time Ratio	Required Movement Time
12	W_L		A	B	20	-	-	20.0Max
21	E_T		B	C	44	-	-	44.0Max
41	N_T		C	D	4	0.163	0.259	34.8
32	S_L		D	A	20	-	-	20.0Max
				Total:	88	0.163	0.259	118.8

- Flow ratio not used for cycle time calculations and the adjusted lost time equals the required movement time (=Min or Max as shown in Table S.1)

Cycle Time:

Minimum	Maximum	Practical	Chosen
40	NA	119	119

Intersection Level of Service	=	D
Worst movement Level of Service	=	F
Average intersection delay (s)	=	49.3
Largest average movement delay (s)	=	94.8
Largest back of queue, 95% (ft)	=	944
Performance Index	=	215.69
Degree of saturation (highest)	=	1.000
Practical Spare Capacity (lowest)	=	-10 %
Total vehicle capacity, all lanes (veh/h)	=	5724
Total vehicle flow (veh/h)	=	3514
Total person flow (pers/h)	=	4217
Total vehicle delay (veh-h/h)	=	48.11
Total person delay (pers-h/h)	=	57.73
Total effective vehicle stops (veh/h)	=	2989
Total effective person stops (pers/h)	=	3586
Total vehicle travel (veh-mi/h)	=	1463.0
Total cost ($/h)	=	946.71
Total fuel (ga/h)	=	87.5
Total CO2 (kg/h)	=	828.85

Castillos de la Monta?a
InT. PR-3, Rampa PR-53 & Acceso V.H.; Hora Pico PM, Transito Actual
Intersection ID: 4
Actuated Isolated Signals, Cycle Time = 119

Table S.4 - PHASE INFORMATION

Phase No.	Change Time	Green Start	Displayed Green	Grn+Intgrn Secs	Prop.
A	0	4	16	20	0.168
B	20	24	40	44	0.370
C	64	68	31	35	0.294
D	99	103	16	20	0.168

Current Phase Sequence No.: 1
Input phase sequence: A B C D
Output phase sequence: A B C D

Castillos de la Monta?a
InT. PR-3, Rampa PR-53 & Acceso V.H.; Hora Pico PM, Transito Actual
Intersection ID: 4
Actuated Isolated Signals, Cycle Time = 119

Table S.8 - LANE FLOW AND CAPACITY INFORMATION

Lan No.	Mov No.	Dem Flow (veh/h) Lef	Thru	Rig	Tot	Lane Width (ft)	Saturation Flow Adj. Basic (tcu)	Aver 1st (veh)	Aver 2nd (veh)	End Cap (veh /h)	Tot Cap (veh /h)	Deg. Satn x	Lane Util %
West: PR-. West Approach													
1 L	12	243	0	0	243	12.0	1900	1805	0	0	243	1.000	100
2 LT	11	<1E	435	0	436	12.0	1900	1861	0	0	626	0.696	100
3 T	11	0	436	0	436	12.0	1900	1862	0	0	626	0.696	100

4 R	13	0	0	260	260	12.0	1900	1234<	1220<	30	1122	0.232	100
South:	South Approach												
1 L	32, 31	190	0	0	190	12.0	1900	1805	0	0	243	0.783	100
2 TR	31, 33	0	41	72	113	12.0	1900	1338	1708	30	286	0.395	50P
East:	PR-3 East Approach												
1 L	22	47	0	0	47	12.0	1900	1805	0	0	243	0.194	100
2 T	21	0	559	0	559	12.0	1900	1877	0	0	631	0.887	100
3 TR	21, 23	0	482	73	555	12.0	1900	1837	916	30	625	0.887	100
North:	Ramp PR-53 North Approach												
1 LT	42, 41	264	26	0	290	12.0	1900	1779	0	0	463	0.626	100
2 TR	41, 43	0	44	342	386	12.0	1900	1422	1497	30	617	0.626	100

E "Excess" flow from back of an adjacent short lane
< Reduced saturation flow due to a short lane effect
P Lane under-utilisation found by the "Program"

Basic Saturation Flow in this table is adjusted for lane width, approach grade, parking manoeuvres and number of buses stopping. Saturation flow scale applies if specified.

Castillos de la Monta?a
InT. PR-3, Rampa PR-53 & Acceso V.H.; Hora Pico PM, Transito Actual
Intersection ID: 4
Actuated Isolated Signals, Cycle Time = 119

Table S.10 - MOVEMENT CAPACITY AND PERFORMANCE SUMMARY

Mov No.	Mov Typ	Dem Flow (veh /h)	Total Cap. (veh /h)	Lane Util (%)	Deg. Satn x	Eff. Grn 1st Grn	Eff. Grn 2nd Grn	Aver. Delay (sec)	Eff. Stop Rate	95% Back of Queue (veh)	Perf. Index
West:	PR-. West Approach										
12 L		243	243	100	1.000*	16*		94.8	0.92	19.1	20.54
11 LT		871E	1251	100	0.696	40		41.7	0.79	26.1	52.54
13 R	(Und)	260	1122<	100	0.232	40	69	9.5	0.67	1.7	5.19
South:	South Approach										
32 L		190	243	100	0.783	16*		81.6	0.85	14.8	15.02
31 T		41	104	50	0.396	16		30.8	0.72	5.8	1.98
33 R	(Und)	72	182	50	0.395	71	16	40.1	0.78	5.8	3.69
East:	PR-3 East Approach										
22 L		47	243	100	0.194	16		61.6	0.75	3.3	3.09
21 T		1041	1174	100	0.887	40*		55.7	0.95	37.4	73.81
23 R	(Und)	73	82	100	0.886	40	70	64.4	0.96	36.7	5.33
North:	Ramp PR-53 North Approach										
42 L		264	422	100	0.626	31		55.7	0.84	18.5	17.17
41 T		70	112	100	0.626	31*		28.5	0.74	18.5	3.28

43	R	(Und)	342	547	100	0.625	31	47	27.4	0.84	13.6	14.05

E "Excess" flow from the short lane of an adjacent movement added to normal flow
< Reduced capacity due to a short lane effect
* Maximum degree of saturation, or critical green periods

Castillos de la Monta?a
InT. PR-3, Rampa PR-53 & Acceso V.H.; Hora Pico PM, Transito Actual
Intersection ID: 4
Actuated Isolated Signals, Cycle Time = 119

Table S.14 - SUMMARY OF INPUT AND OUTPUT DATA

Lane No.	Demand Flow (veh/h) L	T	R	Tot	%HV	Adj. Basic Satf.	Eff Grn (secs) 1st	2nd	Deg Sat x	Aver. Delay (sec)	Longest Queue (ft)	Shrt Lane (ft)
West: PR-. West Approach												
1 L	243			243	0	1900	16		1.000	94.8r	478*	260
2 LT	243	435		436	2	1900	40		0.696	41.7	661	
3 T		436		436	2	1900	40		0.696	41.7	662	
4 R			260	260	0	1900	40	69	0.232	9.5	43	260
	243	871	260	1374	0				1.000	45.0	662	
South: South Approach												
1 L	190			190	0	1900	16		0.783	81.6	370	
2 TR		41	72	113	0	1900	5	16	0.395	36.7	144	
	190	41	72	303	0				0.783	65.2	370	
East: PR-3 East Approach												
1 L	47			47	0	1900	16		0.194	61.6	82	260
2 T		559		559	1	1900	40		0.887	56.3	944	
3 TR		482	73	555	1	1900	40	1	0.887	56.3	926	
	47	1041	73	1161	1				0.887	56.5	944	
North: Ramp PR-53 North Approach												
1 LT	264	26		290	2	1900	31		0.626	55.1	470	
2 TR		44	342	386	2	1900	19	31	0.626	26.3	345	
	264	70	342	676	2				0.626	38.7	470	

ALL VEHICLES	Total Flow	% HV	Cycle Time	Max X	Aver. Delay	Max Queue
	3514	0	119	1.000	49.3	944

Total flow period = 60 minutes. Peak flow period = 15 minutes.

Queue values in this table are 95% back of queue (feet).

Note: Basic Saturation Flows (in through car units) have been adjusted for grade, lane widths, parking manoeuvres and bus stops.

* Queue length exceeds short lane length due to specification of a percentile queue in the aaSIDRA Configuration File. For calculation

of this statistic, you may specify the lane with full length.

r Delay, stops and queue length for this lane have been cut down to fit in the queuing space. The amount cut may not be accounted for fully in the adjacent lane performance statistics. You may wish to change the short lane to a full lane to investigate the extent of this effect.

Castillos de la Monta?a
InT. PR-3, Rampa PR-53 & Acceso V.H.; Hora Pico PM, Transito Actual
Intersection ID: 4
Actuated Isolated Signals, Cycle Time = 119

Table S.15 - CAPACITY AND LEVEL OF SERVICE

Mov No.	Mov Typ	Green Ratio (g/C) 1st grn	2nd grn	Total Flow (veh /h)	Total Cap. (veh /h)	Deg. of Satn (v/c)	Aver. Delay (sec)	LOS
West: PR-. West Approach								
12 L		0.134*		243	243	1.000*	94.8	F
11 LT		0.336		871E	1251	0.696	41.7	D
13 R	(Und)	0.336	0.580	260	1122<	0.232	9.5	A
				1374	2616	1.000	45.0	D
South: South Approach								
32 L		0.134*		190	243	0.783	81.6	F
31 T		0.134		41	104	0.396	30.8	C
33 R	(Und)	0.597	0.134	72	182	0.395	40.1	D
				303	529	0.783	64.9	E
East: PR-3 East Approach								
22 L		0.134		47	243	0.194	61.6	E
21 T		0.336*		1041	1174	0.887	55.7	E
23 R	(Und)	0.336	0.588	73	82	0.886	64.4	E
				1161	1499	0.887	56.5	E
North: Ramp PR-53 North Approach								
42 L		0.261		264	422	0.626	55.7	E
41 T		0.261*		70	112	0.626	28.5	C
43 R	(Und)	0.261	0.395	342	547	0.625	27.4	C
				676	1081	0.626	38.6	D
ALL VEHICLES:				3514	5724	1.000	49.3	D
INTERSECTION (persons):				4217	5724	1.000	49.3	

Level of Service calculations are based on
average control delay including geometric delay (HCM criteria),
independent of the current delay definition used.
For the criteria, refer to the "Level of Service" topic in the
aaSIDRA Output Guide or the Output section of the on-line help.

< Reduced capacity due to a short lane effect

* Maximum v/c ratio, or critical green periods
E "Excess" flow from the short lane of an adjacent movement added to normal flow

---

Castillos de la Monta?a
InT. PR-3, Rampa PR-53 & Acceso V.H.; Hora Pico PM, Transito Actual
Intersection ID: 4

Table S.23 - SENSITIVITY ANALYSIS RESULTS

Performance Measure	Smallest Value	Param Scale
Degree of Satn	0.915	100
Average Delay	49.3	80
Stop Rate	0.83	105
Max. Queue for Any Movement	34.8	55
Perf. Index	206.7	55
Cost total	946.7	80

Performance Measure	Largest Value	Param Scale
Total Vehicle Cap.	5914	100
Prac. Spare Cap.	-2	100

Castillos de la Monta?a
InT. PR-3, Rampa PR-53 & Acceso V.H.; Hora Pico PM, Transito Actual
Intersection ID: 4

Scaled sensitivity parameter: Maximum Green

Table V.23 - INTERSECTION SUMMARY FOR VARIABLE PARAMETER SCALE

Param Scale (%)	Cycle Time (sec)	Total Veh. Cap.	Intersn Deg. of Satn	Prac. Spare Cap.	Aver. Delay (sec)	Stop Rate	Longest Queue (veh)	Perf. Index	Cost Total $/h
50	86	5492	1.089	-17	56.2	0.96	35.6	209.1	1019.5
55	92	5577	1.060	-15	52.6	0.92	34.8	206.7	982.8
60	97	5620	1.031	-13	51.8	0.91	35.3	208.3	974.5
65	104	5649	1.004	-10	51.1	0.89	35.9	211.0	965.6
70	108	5681	1.000	-10	50.1	0.87	36.1	211.2	955.4
75	115	5687	1.000	-10	49.8	0.86	37.0	214.8	952.1
80	119	5724	1.000	-10	49.3	0.85	37.4	215.7	946.7
85	127	5692	1.000	-10	50.6	0.84	39.1	222.9	959.5
90	132	5656	0.987	-9	51.8	0.84	40.0	227.9	972.0
95	140	5663	0.992	-9	53.6	0.84	41.7	236.7	992.4
100	136	5914	0.915	-2	50.9	0.83	39.7	229.3	975.7
105	139	5871	0.978	-8	51.8	0.83	40.5	232.9	985.2
110	143	5853	0.997	-10	53.1	0.83	41.7	237.9	998.0
115	146	5835	1.000	-10	54.1	0.83	42.4	241.7	1008.3
120	151	5814	1.000	-10	56.3	0.84	44.1	249.1	1030.0

--- End of aaSIDRA Output ---

Akcelik & Associates Pty Ltd - aaSIDRA 2.0.0.205

FJRP
Francisco J. Reyes P Registered User No. 50310
Licence Type: Professional, Single Computer

Time and Date of Analysis 2:30 AM, Mar 23,2005

Filename: C:\Documents and Settings\Francisco\My Documents\Francisco\Humacao\Sea View\Sidra\925-3-53PMP.OUT

Castillos de la Monta?as
Int. PR-3, PR-925 & Rampa PR-53; Hora Pico PM, Transito Actual
Intersection ID: 5

aaTraffic SIDRA US Highway Capacity Manual (2000) Version

RUN INFORMATION

Parameter sensitivity run: "Optimum" Maximum Green = 60.0 %

* Basic Parameters:
  Intersection Type: Signalised - Actuated Isolated
  For fully-actuated signal timings, the following specifications will be ignored:
    Any maximum cycle time specification
    Any user-given cycle time (unless phase times also given)
    User-given cycle and phase times (if variable flow scale run)
    Any variable cycle time specification
    Any green split priority specification
  Driving on the right-hand side of the road
  Input data specified in US units
  Default Values File No. 11
  Peak flow period (for performance): 15 minutes
  Unit time (for volumes): 60 minutes (Total Flow Period)
  Delay definition: Control delay
                    Geometric delay included
  HCM Delay and Queue Models option selected
  Level of Service based on: Delay (HCM method)
  Queue definition: Back of queue, 95th Percentile

* No. of Main (Timing-Capacity) Iterations = 3
  Comparison of last two iterations:
    Difference in intersection degree of satn = 1.0 %
    Difference in total vehicle capacity   = 0.3 %
    Largest difference in eff. green times = 1 secs
    (max. value for stopping = 2 secs)
  Information on Previous Iteration:
    Cycle Time = 114
    Phase Times: 0, 16, 50, 80
    Critical Movements: 12, 13(1st), 33, 43(2nd)

Castillos de la Monta?as
Int. PR-3, PR-925 & Rampa PR-53; Hora Pico PM, Transito Actual
Intersection ID: 5

DEFAULT PARAMETERS

Default values for some of the important general parameters:
(Default Values File: DEF11.SDF)

1. Basic saturation flow: 1900 tcu/h

   This value applies mainly to signalised intersections. For roundabouts and sign-controlled intersections, it is used for determining capacity of priority and continuous movements.

2. Through car equivalents for signalised intersections

	LEFT		THROUGH		RIGHT	
	LV	HV	LV	HV	LV	HV
Normal	1.053	2.000	1.000	2.000	1.176	2.000
Restricted	1.303	2.500			1.426	2.500

3. Opposed turn parameters (Signalised intersection)

	Crit. Gap	Fol.up Hdway	Deps at End	% Exit Flow Opposing
Left turns :	4.5	2.5	2.0	0
Right turns:	4.0	2.4	2.5	0

4. Cruise speed= 40 mi/h, Approach Distance= 1800 ft

5. Queue space per vehicle in feet
   Light vehicles: 25.0 Heavy vehicles: 45.0

A full list of input data defaults and ranges is given in the Input Guide part of aaSIDRA User Guide.

Castillos de la Monta?as
Int. PR-3, PR-925 & Rampa PR-53; Hora Pico PM, Transito Actual
Intersection ID: 5
Actuated Isolated Signals, Cycle Time = 113

Table S.0 - TRAFFIC FLOW DATA

Mov No.	Left LV	Left HV	Through LV	Through HV	Right LV	Right HV	Flow Scale	Peak Flow Factor
VEHICLES Demand flows in veh/hour as used by the program								
West: PR-3 West Approach								
12	298	31	0	0	0	0	1.00	0.88
11	0	0	1476	17	0	0	1.00	0.88
13	0	0	0	0	426	10	1.00	0.88
South: Ramp PR-53 South Approach								
32	282	2	0	0	0	0	1.00	0.88
33	0	0	14	0	72	3	1.00	0.88
East: PR-3 East Approach								
22	343	11	0	0	0	0	1.00	0.88
21	0	0	1295	17	0	0	1.00	0.88
23	0	0	0	0	194	1	1.00	0.88

North: PR-925 North Approach								
42	49	2	0	0	0	0	1.00	0.88
41	0	0	75	3	0	0	1.00	0.88
43	0	0	0	0	232	3	1.00	0.88

Based on unit time = 60 minutes.
Flow Scale and Peak Hour Factor effects included in flow values.

Castillos de la Monta?as
Int. PR-3, PR-925 & Rampa PR-53; Hora Pico PM, Transito Actual
Intersection ID: 5
Actuated Isolated Signals, Cycle Time = 113

Table S.1 - MOVEMENT PHASE AND TIMING PARAMETERS

Mov No.	Mov Typ	PHASE MATRIX First Green Fr	To	Op	Pr	Second Green Fr	To	Op	Pr	Lost Tim 1st Grn	Lost Tim 2nd Grn	Req.Mov.Time 1st Grn	Req.Mov.Time 2nd Grn	Eff. Grn 1st Grn	Eff. Grn 2nd Grn
West: PR-3 West Approach															
12	L	*A	B							4		16.0Max		12	
11	LT	B	C							4		34.0Max		30	
13	R (Un2)	*B	C			C	B	R		4	17	34.0Max	30.0Min	30	62
South: Ramp PR-53 South Approach															
32	L	C	D							4		16.0Max		25	
33	TR (Un2)	*C	D							4		28.5		25	
East: PR-3 East Approach															
22	L	A	B							4		16.0Max		12	
21	LT	B	C							4		34.0Max		30	
North: PR-925 North Approach															
42	L	D	A							4		16.0Max		30	
41	T	D	A							4		23.6		30	
43	R (Un1)	A	D	R		*D	A			32	4	34.0Max	34.0Max	47	30

Current Phase Sequence No.: 1
Input phase sequence: A B C D
Output phase sequence: A B C D

Movement Types:
- Ped Pedestrian
- Dum Dummy
- Und Undetected in both green periods
- Un1 Undetected in 1st green period
- Un2 Undetected in 2nd green period

Under heading 'Op':
- L "Left" turns are opposed
- R "Right" turns are opposed
- LR "Left and Right" opposed
- C "Constant" saturation flow

Castillos de la Monta?as
Int. PR-3, PR-925 & Rampa PR-53; Hora Pico PM, Transito Actual
Intersection ID: 5
Actuated Isolated Signals, Cycle Time = 113

Table S.2 - MOVEMENT CAPACITY PARAMETERS

Mov No.	Dem Flow (veh /h)	Satn Flow 1st Grn	Satn Flow 2nd Grn	Flow Ratio 1st Grn	Flow Ratio 2nd Grn	Total Cap. (veh /h)	Prac. Deg. Satn xp	Prac. Spare Cap. (%)	Lane Util (%)	Deg. Satn x
West: PR-3 West Approach										
12 L	213	1664		0.128		177	0.90	-25	100	1.206
11 LT	1609E	4620<		0.348		1227	0.90	-31	76	1.312*
13 R	436	494<	556<	0.252	0.560	436	0.90	-10	76	1.000
South: Ramp PR-53 South Approach										
32 L	284	2440<		0.116		540	0.90	71	100	0.526
33 TR	89	765<		0.116		169	0.90	71	100	0.526
East: PR-3 East Approach										
22 L	225	1756		0.128		186	0.90	-25	100	1.204
21 LT	1441E	5593		0.258		1485	0.90	-7	100	0.971
23 R	195	1609		0.121		1609	0.98	709	100	0.121
North: PR-925 North Approach										
42 L	51	709		0.072		188	0.90	232	64	0.271
41 T	78	1085		0.072		288	0.90	232	64	0.271
43 R	235	934<	630<	0.123	0.190	556	0.90	113	100	0.423

E "Excess" flow from the short lane of an adjacent movement added to normal flow

< Reduced saturation flow due to a short lane effect

Castillos de la Monta?as
Int. PR-3, PR-925 & Rampa PR-53; Hora Pico PM, Transito Actual
Intersection ID: 5
Actuated Isolated Signals, Cycle Time = 113

Table S.3 - INTERSECTION PARAMETERS

Crit Mov No.	App. & Turn	Green Period	Phases Fr	Phases To	Adjusted Lost Time	Adjusted Flow Ratio	Required Grn Time Ratio	Required Movement Time
12	W_L		A	B	16	-	-	16.0Max
13	W_R	1st	B	C	34	-	-	34.0Max
33	S_TR		C	D	4	0.116	0.217	28.5
43	N_R	2nd	D	A	34	-	-	34.0Max
				Total:	88	0.116	0.217	112.5

- Flow ratio not used for cycle time calculations and the adjusted lost time equals the required movement time (=Min or Max as shown in Table S.1)

Cycle Time:

Minimum	Maximum	Practical	Chosen
40	NA	113	113

Intersection Level of Service = F
Worst movement Level of Service = F

Average intersection delay (s)	=	103.9
Largest average movement delay (s)	=	202.3
Largest back of queue, 95% (ft)	=	1735
Performance Index	=	428.52
Degree of saturation (highest)	=	1.312
Practical Spare Capacity (lowest)	=	-31 %
Total vehicle capacity, all lanes (veh/h)	=	6932
Total vehicle flow (veh/h)	=	4856
Total person flow (pers/h)	=	5827
Total vehicle delay (veh-h/h)	=	140.15
Total person delay (pers-h/h)	=	168.18
Total effective vehicle stops (veh/h)	=	5479
Total effective person stops (pers/h)	=	6575
Total vehicle travel (veh-mi/h)	=	2022.0
Total cost ($/h)	=	2056.83
Total fuel (ga/h)	=	158.3
Total CO2 (kg/h)	=	1499.39

Castillos de la Monta?as
Int. PR-3, PR-925 & Rampa PR-53; Hora Pico PM, Transito Actual
Intersection ID: 5
Actuated Isolated Signals, Cycle Time = 113

Table S.4 - PHASE INFORMATION

Phase No.	Change Time	Green Start	Displayed Green	Grn+Intgrn Secs	Prop.
A	0	4	12	16	0.142
B	16	20	30	34	0.301
C	50	54	25	29	0.257
D	79	83	30	34	0.301

Current Phase Sequence No.: 1
Input phase sequence: A B C D
Output phase sequence: A B C D

Castillos de la Monta?as
Int. PR-3, PR-925 & Rampa PR-53; Hora Pico PM, Transito Actual
Intersection ID: 5
Actuated Isolated Signals, Cycle Time = 113

Table S.8 - LANE FLOW AND CAPACITY INFORMATION

Lan No.	Mov No.	Dem Flow (veh/h) Lef	Thru	Rig	Tot	Lane Width (ft)	Saturation Flow Adj. Basic (tcu)	Aver 1st (veh)	Aver 2nd (veh)	End Cap (veh /h)	Tot Cap (veh /h)	Deg. Satn x	Lane Util %
West: PR-3 West Approach													
1 L	12	213	0	0	213	12.0	1900	1664	0	0	177	1.206	100
2 LT	11	116E	538	0	654	12.0	1900	1879	0	0	499	1.312	100
3 T	11	0	654	0E	654	12.0	1900	1879	0	0	499	1.312	100
4 TR	11, 13	0	300	436	736	12.0	1900	835<	938<	32	736	1.000	76P

South: Ramp PR-53 South Approach														
1	L	32	209	0	0	209	12.0	1900	1794	0	0	397	0.526	100
2	LTR	32, 33	75	14	75	164	12.0	1900	1411<	0	0	312	0.526	100
East: PR-3 East Approach														
1	L	22	225	0	0	225	12.0	1900	1756	0	0	186	1.205	100
2	LT	21	129E	345	0	475	12.0	1900	1841	0	0	489	0.971	100
3	T	21	0	483	0	483	12.0	1900	1876	0	0	498	0.971	100
4	T	21	0	483	0	483	12.0	1900	1876	0	0	498	0.971	100
5	R	23	0	0	195	195	12.0	1900	1609	1609	0	1609	0.121	100
North: PR-925 North Approach														
1	LT	42, 41	51	78	0	129	12.0	1900	1795	0	0	476	0.271	64P
2	R	41, 43	0	0	235	235	12.0	1900	934<	630<	32	556	0.423	100

E "Excess" flow from back of an adjacent short lane
< Reduced saturation flow due to a short lane effect
P Lane under-utilisation found by the "Program"

Basic Saturation Flow in this table is adjusted for lane width, approach grade, parking manoeuvres and number of buses stopping. Saturation flow scale applies if specified.

Castillos de la Monta?as
Int. PR-3, PR-925 & Rampa PR-53; Hora Pico PM, Transito Actual
Intersection ID: 5
Actuated Isolated Signals, Cycle Time = 113

Table S.10 - MOVEMENT CAPACITY AND PERFORMANCE SUMMARY

Mov No.	Mov Typ	Dem Flow (veh /h)	Total Cap. (veh /h)	Lane Util (%)	Deg. Satn x	Eff. Grn 1st Grn	Eff. Grn 2nd Grn	Aver. Delay (sec)	Eff. Stop Rate	95% Back of Queue (veh)	Perf. Index
West: PR-3 West Approach											
12	L	213	177	100	1.206	12*		202.3	1.24	23.9	29.05
11	LT	1609E	1227<	76	1.312*	30		164.5	1.46	68.0	195.17
13	R (Un2)	436E	436<	76	1.000	30*	62	14.4	0.84	19.1	14.43
South: Ramp PR-53 South Approach											
32	L	284	540<	100	0.526	25		54.1	0.81	13.0	17.72
33	TR (Un2)	89	169<	100	0.526	25*		52.8	0.79	10.3	5.48
East: PR-3 East Approach											
22	L	225	186	100	1.204	12		199.8	1.24	24.9	30.40
21	LT	1441E	1485	100	0.971	30		79.5	1.06	35.6	118.31
23	R (Con)	195	1609	100	0.121	113		9.1	0.65	4.9 #	3.22
North: PR-925 North Approach											
42	L	51	188	64	0.271	30		46.3	0.78	7.3	2.85
41	T	78	288	64	0.271	30		37.1	0.66	7.3	4.11
43	R (Un1)	235	556<	100	0.423	47	30*	16.7	0.77	6.5	7.78

E "Excess" flow from the short lane of an adjacent movement

added to normal flow
< Reduced capacity due to a short lane effect
* Maximum degree of saturation, or critical green periods
# Largest density (passenger cars per km or mile) for any lane

---

Castillos de la Monta?as
Int. PR-3, PR-925 & Rampa PR-53; Hora Pico PM, Transito Actual
Intersection ID: 5
Actuated Isolated Signals, Cycle Time = 113

Table S.14 - SUMMARY OF INPUT AND OUTPUT DATA

Lane No.	Demand Flow (veh/h) L	T	R	Tot	%HV	Adj. Basic Satf.	Eff Grn (secs) 1st	2nd	Deg Sat x	Aver. Delay (sec)	Longest Queue (ft)	Shrt Lane (ft)
West: PR-3 West Approach												
1 L	213			213	9	1900	12		1.206	202.3r	643*	360
2 LT	213	538		654	4	1900	30		1.312	201.2	1735	
3 T		654		654	1	1900	30		1.312	201.2	1715	
4 TR		300	436	736	2	1900	30	62	1.000	10.4r	485*	260
	329	1493	436	2258	3				1.312	139.1	1735	
South: Ramp PR-53 South Approach												
1 L	209			209	1	1900	25		0.526	54.3	327	
2 LTR	75	14	75	164	2	1900	25		0.526	53.3	262*	260
	284	14	75	373	1				0.526	53.9	327	250d
East: PR-3 East Approach												
1 L	225			225	3	1900	12		1.205	199.8r	639*	360
2 LT	225	345		475	2	1900	30		0.971	79.7	889	
3 T		483		483	1	1900	30		0.971	79.3	899	
4 T		483		483	1	1900	30		0.971	79.3	899	
5 R			195	195	1	1900	113		0.121	9.1		260
	354	1312	195	1861	2				1.205	86.6	899	
North: PR-925 North Approach												
1 LT	51	78		129	4	1900	30		0.271	40.7	187	
2 R			235	235	1	1900	47	30	0.423	16.7	164	260
	51	78	235	364	2				0.423	25.2	187	250d

ALL VEHICLES	Total Flow	% HV	Cycle Time	Max X	Aver. Delay	Max Queue
	4856	2	113	1.312	103.9	1735

Total flow period = 60 minutes. Peak flow period = 15 minutes.

Queue values in this table are 95% back of queue (feet).

Note: Basic Saturation Flows (in through car units) have been adjusted for grade, lane widths, parking manoeuvres and bus stops.

* Queue length exceeds short lane length due to specification of a

percentile queue in the aaSIDRA Configuration File. For calculation of this statistic, you may specify the lane with full length.

d Short lane length on departure side.

r Delay, stops and queue length for this lane have been cut down to fit in the queuing space. The amount cut may not be accounted for fully in the adjacent lane performance statistics. You may wish to change the short lane to a full lane to investigate the extent of this effect.

Castillos de la Monta?as
Int. PR-3, PR-925 & Rampa PR-53; Hora Pico PM, Transito Actual
Intersection ID: 5
Actuated Isolated Signals, Cycle Time = 113

Table S.15 - CAPACITY AND LEVEL OF SERVICE

Mov No.	Mov Typ	Green Ratio (g/C) 1st grn	Green Ratio (g/C) 2nd grn	Total Flow (veh /h)	Total Cap. (veh /h)	Deg. of Satn (v/c)	Aver. Delay (sec)	LOS
West: PR-3 West Approach								
12 L		0.106*		213	177	1.206	202.3	F
11 LT		0.265		1609E	1227<	1.312*	164.5	F
13 R	(Un2)	0.265*	0.549	436E	436<	1.000	14.4	B
				2258	1839	1.312	139.1	F
South: Ramp PR-53 South Approach								
32 L		0.221		284	540<	0.526	54.1	D
33 TR	(Un2)	0.221*		89	169<	0.526	52.8	D
				373	709	0.526	53.8	D
East: PR-3 East Approach								
22 L		0.106		225	186	1.204	199.8	F
21 LT		0.265		1441E	1485	0.971	79.5	E
23 R	(Con)	1.000		195	1609	0.121	9.1	A#
				1861	3280	1.204	86.6	F
North: PR-925 North Approach								
42 L		0.265		51	188	0.271	46.3	D
41 T		0.265		78	288	0.271	37.1	D
43 R	(Un1)	0.416	0.265*	235	556<	0.423	16.7	B
				364	1032	0.423	25.2	C
ALL VEHICLES:				4856	6932	1.312	103.9	F
INTERSECTION (persons):				5827	6932	1.312	103.9	

Level of Service calculations are based on
average control delay including geometric delay (HCM criteria),
independent of the current delay definition used.
For the criteria, refer to the "Level of Service" topic in the

aaSIDRA Output Guide or the Output section of the on-line help.
Level Of Service for continuous movements based on density
< Reduced capacity due to a short lane effect
* Maximum v/c ratio, or critical green periods
E "Excess" flow from the short lane of an adjacent movement added to normal flow

---

Castillos de la Monta?as
Int. PR-3, PR-925 & Rampa PR-53; Hora Pico PM, Transito Actual
Intersection ID: 5

Table S.23 - SENSITIVITY ANALYSIS RESULTS

Performance Measure	Smallest Value	Param Scale
Degree of Satn	1.312	60
Average Delay	103.9	60
Stop Rate	1.06	120
Max. Queue for Any Movement	62.7	50
Perf. Index	418.0	50
Cost total	2056.8	60

Performance Measure	Largest Value	Param Scale
Total Vehicle Cap.	6932	60
Prac. Spare Cap.	-31	60

Castillos de la Monta?as
Int. PR-3, PR-925 & Rampa PR-53; Hora Pico PM, Transito Actual
Intersection ID: 5

Scaled sensitivity parameter: Maximum Green

Table V.23 - INTERSECTION SUMMARY FOR VARIABLE PARAMETER SCALE

Param Scale (%)	Cycle Time (sec)	Total Veh. Cap.	Intersn Deg. of Satn	Prac. Spare Cap.	Aver. Delay (sec)	Stop Rate	Longest Queue (veh)	Perf. Index	Cost Total $/h
50	98	6923	1.324	-32	105.1	1.17	62.7	418.0	2073.8
55	107	6930	1.314	-32	104.2	1.14	65.7	423.8	2060.7
60	113	6932	1.312	-31	103.9	1.13	68.0	428.5	2056.8
65	122	6921	1.316	-32	105.9	1.12	72.2	441.2	2083.3
70	129	6905	1.329	-32	109.0	1.11	75.9	454.4	2124.4
75	137	6916	1.317	-32	108.3	1.10	78.4	459.9	2113.7
80	144	6896	1.330	-32	111.8	1.10	82.2	474.1	2159.7
85	153	6882	1.339	-33	115.2	1.09	87.0	490.1	2205.1
90	159	6875	1.343	-33	116.9	1.09	89.7	499.3	2226.8
95	168	6868	1.346	-33	119.5	1.08	93.7	513.3	2260.4
100	174	6864	1.349	-33	121.5	1.08	96.7	523.2	2286.2
105	183	6853	1.351	-33	123.8	1.07	100.4	536.1	2314.2
110	189	6841	1.358	-34	126.0	1.07	103.8	546.5	2344.1
115	198	6834	1.358	-34	128.1	1.06	107.4	558.9	2370.1

120	204	6829	1.360	-34	129.3	1.06	109.9	566.7	2385.4

--- End of aaSIDRA Output ---

ANEJO 4
ANALISI DE TRANSITO PROYECTADO
AASIDRA 2.0

Akcelik & Associates Pty Ltd - aaSIDRA 2.0.0.205

FJRP
Francisco J. Reyes P Registered User No. 50310
Licence Type: Professional, Single Computer

Time and Date of Analysis 3:23 AM, Mar 23,2005

Filename: C:\Documents and Settings\Francisco\My Documents\Francisco\Humacao\Sea View\Sidra\925-3AMF.OUT

Castillos de la Monta?a
Intersecci?n PR-925 & PR-3; Hora Pico AM, Transito proyectado
Intersection ID: 1

aaTraffic SIDRA US Highway Capacity Manual (2000) Version

RUN INFORMATION
---

* Basic Parameters:
  Intersection Type: Unsignalised - Two-Way Stop Control
  Driving on the right-hand side of the road
  Input data specified in US units
  Default Values File No. 11
  Peak flow period (for performance): 15 minutes
  Unit time (for volumes): 60 minutes (Total Flow Period)
  Delay definition: Control delay
                Geometric delay included
  HCM Delay and Queue Models option selected
  Level of Service based on: Delay (HCM method)
  Queue definition: Back of queue, 95th Percentile

Castillos de la Monta?a
Intersecci?n PR-925 & PR-3; Hora Pico AM, Transito proyectado
Intersection ID: 1

DEFAULT PARAMETERS

Default values for some of the important general parameters:
(Default Values File: DEF11.SDF)

1. Basic saturation flow: 1900 tcu/h

   This value applies mainly to signalised intersections. For roundabouts and sign-controlled intersections, it is used for determining capacity of priority and continuous movements.

2. Through car equivalents for signalised intersections

	LEFT		THROUGH		RIGHT	
	LV	HV	LV	HV	LV	HV
Normal	1.053	2.000	1.000	2.000	1.176	2.000
Restricted	1.303	2.500			1.426	2.500

3. Opposed turn parameters (Two-Way Stop Control)

	Crit. Gap	Fol.up Hdway	Min. Deps	% Exit Flow Opposing
Left turns :	7.5	3.5	2.0	50
Through :	6.5	4.0	2.0	50
Right turns:	6.9	3.3	2.0	50
Opposed turns from priority road:				
	4.1	2.2	2.0	0

4. Cruise speed= 40 mi/h, Approach Distance= 1800 ft

5. Queue space per vehicle in feet
   Light vehicles: 25.0 Heavy vehicles: 45.0

A full list of input data defaults and ranges is given in the Input Guide part of aaSIDRA User Guide.

Castillos de la Monta?a
Intersecci?n PR-925 & PR-3; Hora Pico AM, Transito proyectado
Intersection ID: 1
Stop Sign Controlled Intersection

Table S.0 - TRAFFIC FLOW DATA

Mov No.	Left LV	Left HV	Through LV	Through HV	Right LV	Right HV	Flow Scale	Peak Flow Factor
VEHICLES Demand flows in veh/hour as used by the program								
West: PR-3 West Approach								
12	143	2	457	17	0	0	1.00	0.89
East: PR-3 East Approach								
22	0	0	701	12	0	0	1.00	0.89
23	0	0	0	0	64	1	1.00	0.89
North: PR-925 North Approach								
42	145	1	0	0	0	0	1.00	0.89
43	0	0	0	0	337	2	1.00	0.89

Based on unit time = 60 minutes.
Flow Scale and Peak Hour Factor effects included in flow values.

Castillos de la Monta?a
Intersecci?n PR-925 & PR-3; Hora Pico AM, Transito proyectado
Intersection ID: 1
Stop Sign Controlled Intersection

Table S.2 - MOVEMENT CAPACITY PARAMETERS

Mov No.	Dem Flow (veh /h)	Total Opng Flow (veh/h)	%HV	Adjust. Opng Flow (pcu/h)	Total Cap. (veh /h)	Prac. Deg. Satn xp	Prac. Spare Cap. (%)	Lane Util (%)	Deg. Satn x
West: PR-3 West Approach									
12 LT	619	713	1.7	713	2395	0.80	210	72	0.258

East: PR-3 East Approach									
22	T	713	0			1689	0.80	90	100	0.422
23	R	65	0			154	0.80	90	100	0.422
North: PR-925 North Approach										
42	L	146	746+	1.7	746	306	0.80	68	100	0.477
43	R	339	746+	1.7	746	361	0.80	-15	100	0.939*

+ Percentage of exiting flow included in total opposing flow

Castillos de la Monta?a
Intersecci?n PR-925 & PR-3; Hora Pico AM, Transito proyectado
Intersection ID: 1
Stop Sign Controlled Intersection

Table S.3 - INTERSECTION PARAMETERS

Intersection Level of Service	=	C
Worst movement Level of Service	=	F
Average intersection delay (s)	=	15.7
Largest average movement delay (s)	=	67.8
Largest back of queue, 95% (ft)	=	440
Performance Index	=	40.74
Degree of saturation (highest)	=	0.939
Practical Spare Capacity (lowest)	=	-15 %
Total vehicle capacity, all lanes (veh/h)	=	5128
Total vehicle flow (veh/h)	=	1882
Total person flow (pers/h)	=	2258
Total vehicle delay (veh-h/h)	=	8.19
Total person delay (pers-h/h)	=	9.83
Total effective vehicle stops (veh/h)	=	908
Total effective person stops (pers/h)	=	1089
Total vehicle travel (veh-mi/h)	=	782.9
Total cost ($/h)	=	347.67
Total fuel (ga/h)	=	33.9
Total CO2 (kg/h)	=	321.08

Castillos de la Monta?a
Intersecci?n PR-925 & PR-3; Hora Pico AM, Transito proyectado
Intersection ID: 1
Stop Sign Controlled Intersection

Table S.8 - LANE FLOW AND CAPACITY INFORMATION

Lan No.	Mov No.	Dem Flow (veh/h) Lef	Thru	Rig	Tot	Min Cap (veh /h)	Tot Cap (veh /h)	Deg. Satn x	Lane Util %
West: PR-3 West Approach									
1 L	12	145	0	0	145	120	785	0.185	72P
2 T	12	0	474	0	474	474	1834	0.258	100
East: PR-3 East Approach									

1 TR	22, 23	0	713	65	778	778	1842	0.422	100

North: PR-925 North Approach

1 L	42	146	0	0	146	120	306	0.477	100
2 R	43	0	0	339	339	120	361	0.940	100

P Lane under-utilisation found by the "Program"

The capacity value for priority and continuous movements is obtained by adjusting the basic saturation flow for heavy vehicle and turning vehicle effects. Saturation flow scale applies if specified.

Castillos de la Monta?a
Intersecci?n PR-925 & PR-3; Hora Pico AM, Transito proyectado
Intersection ID: 1
Stop Sign Controlled Intersection

Table S.10 - MOVEMENT CAPACITY AND PERFORMANCE SUMMARY

Mov No.	Mov Typ	Dem Flow (veh /h)	Total Cap. (veh /h)	Lane Util (%)	Deg. Satn x	Aver. Delay (sec)	Eff. Stop Rate	95% Back of Queue (veh)	Perf. Index
West: PR-3 West Approach									
12	LT	619	2395	72	0.258	3.1	0.20	0.9	7.98
East: PR-3 East Approach									
22	T	713	1689	100	0.422	0.0	0.00	0.0	7.44
23	R	65	154	100	0.422	9.7	0.72	0.0	1.11
North: PR-925 North Approach									
42	L	146	306	100	0.477	27.1	1.12	4.4	4.95
43	R	339	361	100	0.939*	67.8	1.68	17.5	19.27

* Maximum degree of saturation

Castillos de la Monta?a
Intersecci?n PR-925 & PR-3; Hora Pico AM, Transito proyectado
Intersection ID: 1
Stop Sign Controlled Intersection

Table S.14 - SUMMARY OF INPUT AND OUTPUT DATA

Lane No.	Demand Flow (veh/h) L	T	R	Tot	%HV	Adj. Basic Satf.	Eff Grn (secs) 1st	2nd	Deg Sat x	Aver. Delay (sec)	Longest Queue (ft)	Shrt Lane (ft)
West: PR-3 West Approach												
1 L	145			145	1				0.185	13.3	24	160
2 T		474		474	4				0.258	0.0	0	
	145	474	0	619	3				0.258	3.1	24	

East: PR-3 East Approach								
1 TR		713	65	778	2	0.422	0.8	0
	0	713	65	778	2	0.422	0.8	
North: PR-925 North Approach								
1 L	146			146	1	0.477	27.1	111
2 R			339	339	1	0.940	67.8	440
	146	0	339	485	1	0.940	55.5	440

ALL VEHICLES	Total Flow	% HV	Max X	Aver. Delay	Max Queue
	1882	2	0.939	15.7	440

Total flow period = 60 minutes. Peak flow period = 15 minutes.

Queue values in this table are 95% back of queue (feet).

Note: Basic Saturation Flows are not adjusted at roundabouts or sign-controlled intersections and apply only to continuous lanes.

Castillos de la Monta?a
Intersecci?n PR-925 & PR-3; Hora Pico AM, Transito proyectado
Intersection ID: 1
Stop Sign Controlled Intersection

Table S.15 - CAPACITY AND LEVEL OF SERVICE

Mov No.	Mov Typ	Total Flow (veh /h)	Total Cap. (veh /h)	Deg. of Satn (v/c)	Aver. Delay (sec)	LOS
West: PR-3 West Approach						
12	LT	619	2395	0.258	3.1	A
		619	2395	0.258	3.1	A
East: PR-3 East Approach						
22	T	713	1689	0.422	0.0	A
23	R	65	154	0.422	9.7	A
		778	1843	0.422	0.8	A
North: PR-925 North Approach						
42	L	146	306	0.477	27.1	D
43	R	339	361	0.939*	67.8	F
		485	667	0.939	55.5	F
ALL VEHICLES:		1882	5128	0.939	15.7	C

Level of Service calculations are based on average control delay including geometric delay (HCM criteria), independent of the current delay definition used.
For the criteria, refer to the "Level of Service" topic in the aaSIDRA Output Guide or the Output section of the on-line help.
* Maximum v/c ratio, or critical green periods

--- End of aaSIDRA Output ---

Akcelik & Associates Pty Ltd - aaSIDRA 2.0.0.205

FJRP
Francisco J. Reyes P Registered User No. 50310
Licence Type: Professional, Single Computer

Time and Date of Analysis 12:49 AM, Mar 23,2005

Filename: C:\Documents and Settings\Francisco\My Documents\Francisco\Humacao\Sea View\Sidra\CC-3AMF.OUT

Castillos de la Monta?a
Int. PR-3 & acceso Ciudad Cristiana; Hora Pico AM, Transito Proyectado
Intersection ID: 2

aaTraffic SIDRA US Highway Capacity Manual (2000) Version

RUN INFORMATION

* Basic Parameters:
  Intersection Type: Unsignalised - Two-Way Stop Control
  Driving on the right-hand side of the road
  Input data specified in US units
  Default Values File No. 11
  Peak flow period (for performance): 15 minutes
  Unit time (for volumes): 60 minutes (Total Flow Period)
  Delay definition: Control delay
  Geometric delay included
  HCM Delay and Queue Models option selected
  Level of Service based on: Delay (HCM method)
  Queue definition: Back of queue, 95th Percentile

Castillos de la Monta?a
Int. PR-3 & acceso Ciudad Cristiana; Hora Pico AM, Transito Proyectado
Intersection ID: 2

DEFAULT PARAMETERS

Default values for some of the important general parameters:
(Default Values File: DEF11.SDF)

1. Basic saturation flow: 1900 tcu/h

   This value applies mainly to signalised intersections. For roundabouts and sign-controlled intersections, it is used for determining capacity of priority and continuous movements.

2. Through car equivalents for signalised intersections

	LEFT		THROUGH		RIGHT	
	LV	HV	LV	HV	LV	HV
Normal	1.053	2.000	1.000	2.000	1.176	2.000
Restricted	1.303	2.500			1.426	2.500

3. Opposed turn parameters (Two-Way Stop Control)

	Crit. Gap	Fol.up Hdway	Min. Deps	% Exit Flow Opposing
Left turns :	7.5	3.5	2.0	50
Through :	6.5	4.0	2.0	50
Right turns:	6.9	3.3	2.0	50
Opposed turns from priority road:				
	4.1	2.2	2.0	0

4. Cruise speed= 40 mi/h, Approach Distance= 1800 ft

5. Queue space per vehicle in feet
   Light vehicles: 25.0 Heavy vehicles: 45.0

A full list of input data defaults and ranges is given in the Input Guide part of aaSIDRA User Guide.

Castillos de la Monta?a
Int. PR-3 & acceso Ciudad Cristiana; Hora Pico AM, Transito Proyectado
Intersection ID: 2

Stop Sign Controlled Intersection

Table S.0 - TRAFFIC FLOW DATA

Mov No.	Left LV	Left HV	Through LV	Through HV	Right LV	Right HV	Flow Scale	Peak Flow Factor
VEHICLES Demand flows in veh/hour as used by the program								
West: PR-3 West Approach								
12	0	0	686	29	0	0	1.00	0.90
13	0	0	0	0	57	0	1.00	0.90
South: CC South Approach								
32	159	1	0	0	0	0	1.00	0.90
33	0	0	0	0	30	0	1.00	0.90
East: PR-3 East Approach								
22	32	0	1007	27	0	0	1.00	0.90

Based on unit time = 60 minutes.
Flow Scale and Peak Hour Factor effects included in flow values.

Castillos de la Monta?a
Int. PR-3 & acceso Ciudad Cristiana; Hora Pico AM, Transito Proyectado
Intersection ID: 2
Stop Sign Controlled Intersection

Table S.2 - MOVEMENT CAPACITY PARAMETERS

Mov No.	Dem Flow (veh /h)	Total Opng Flow (veh/h)	%HV	Adjust. Opng Flow (pcu/h)	Total Cap. (veh /h)	Prac. Deg. Satn xp	Prac. Spare Cap. (%)	Lane Util (%)	Deg. Satn x

West: PR-3 West Approach										
12	T	715	0			1675	0.80	87	100	0.427
13	R	57	0			134	0.80	88	100	0.425
South: CC South Approach										
32	L	160	1778+	3.2	1778	120	0.80	-40	100	1.333*
33	R	30	744+	3.9	744	362	0.80	865	100	0.083
East: PR-3 East Approach										
22	LT	1066	715	4.1	715	1779	0.80	34	100	0.599

\+ Percentage of exiting flow included in total opposing flow

---

Castillos de la Monta?a
Int. PR-3 & acceso Ciudad Cristiana; Hora Pico AM, Transito Proyectado
Intersection ID: 2
Stop Sign Controlled Intersection

Table S.3 - INTERSECTION PARAMETERS

Intersection Level of Service	=	D
Worst movement Level of Service	=	F
Average intersection delay (s)	=	27.0
Largest average movement delay (s)	=	263.7
Largest back of queue, 95% (ft)	=	922
Performance Index	=	57.40
Degree of saturation (highest)	=	1.333
Practical Spare Capacity (lowest)	=	-40 %
Total vehicle capacity, all lanes (veh/h)	=	4069
Total vehicle flow (veh/h)	=	2028
Total person flow (pers/h)	=	2434
Total vehicle delay (veh-h/h)	=	15.22
Total person delay (pers-h/h)	=	18.26
Total effective vehicle stops (veh/h)	=	323
Total effective person stops (pers/h)	=	388
Total vehicle travel (veh-mi/h)	=	845.3
Total cost ($/h)	=	418.90
Total fuel (ga/h)	=	42.4
Total CO2 (kg/h)	=	401.29

Castillos de la Monta?a
Int. PR-3 & acceso Ciudad Cristiana; Hora Pico AM, Transito Proyectado
Intersection ID: 2
Stop Sign Controlled Intersection

Table S.8 - LANE FLOW AND CAPACITY INFORMATION

Lan No.	Mov No.	Dem Flow (veh/h) Lef	Thru	Rig	Tot	Min Cap (veh /h)	Tot Cap (veh /h)	Deg. Satn x	Lane Util %
West: PR-3 West Approach									
1	TR	12, 13	0	715	57	772	772	1809	0.427	100

South: CC South Approach									
1 L	32	160	0	0	160	120	120	1.333	100
2 R	33	0	0	30	30	30	362	0.083	100
East: PR-3 East Approach									
1 LT	22	32	1034	0	1066	1066	1779	0.599	100

The capacity value for priority and continuous movements is obtained by adjusting the basic saturation flow for heavy vehicle and turning vehicle effects. Saturation flow scale applies if specified.

Castillos de la Monta?a
Int. PR-3 & acceso Ciudad Cristiana; Hora Pico AM, Transito Proyectado
Intersection ID: 2
Stop Sign Controlled Intersection

Table S.10 - MOVEMENT CAPACITY AND PERFORMANCE SUMMARY

Mov No.	Mov Typ	Dem Flow (veh /h)	Total Cap. (veh /h)	Lane Util (%)	Deg. Satn x	Aver. Delay (sec)	Eff. Stop Rate	95% Back of Queue (veh)	Perf. Index
West: PR-3 West Approach									
12	T	715	1675	100	0.427	0.0	0.00	0.0	7.46
13	R	57	134	100	0.425	9.6	0.72	0.0	0.97
South: CC South Approach									
32	L	160	120	100	1.333*	263.7	1.32	36.7	28.54
33	R	30	362	100	0.083	15.8	1.00	0.5	0.78
East: PR-3 East Approach									
22	LT	1066	1779	100	0.599	10.9	0.04	14.6	19.65

* Maximum degree of saturation

Castillos de la Monta?a
Int. PR-3 & acceso Ciudad Cristiana; Hora Pico AM, Transito Proyectado
Intersection ID: 2
Stop Sign Controlled Intersection

Table S.14 - SUMMARY OF INPUT AND OUTPUT DATA

Lane No.	Demand Flow (veh/h) L	T	R	Tot	%HV	Adj. Basic Satf.	Eff Grn (secs) 1st	2nd	Deg Sat x	Aver. Delay (sec)	Longest Queue (ft)	Shrt Lane (ft)
West: PR-3 West Approach												
1 TR		715	57	772	4				0.427	0.7	0	
	0	715	57	772	4				0.427	0.7		
South: CC South Approach												

1 L	160			160	1		1.333	263.7	922
2 R			30	30	0		0.083	15.8	14
	160	0	30	190	1		1.333	224.6	922
East: PR-3 East Approach									
1 LT	32	1034		1066	3		0.599	10.9	373
	32	1034	0	1066	3		0.599	10.9	373
ALL VEHICLES				Total Flow 2028	% HV 3		Max X 1.333	Aver. Delay 27.0	Max Queue 922

Total flow period = 60 minutes. Peak flow period = 15 minutes.

Queue values in this table are 95% back of queue (feet).

Note: Basic Saturation Flows are not adjusted at roundabouts or sign-controlled intersections and apply only to continuous lanes.

Castillos de la Monta?a
Int. PR-3 & acceso Ciudad Cristiana; Hora Pico AM, Transito Proyectado
Intersection ID: 2
Stop Sign Controlled Intersection

Table S.15 - CAPACITY AND LEVEL OF SERVICE

Mov No.	Mov Typ	Total Flow (veh /h)	Total Cap. (veh /h)	Deg. of Satn (v/c)	Aver. Delay (sec)	LOS
West: PR-3 West Approach						
12	T	715	1675	0.427	0.0	A
13	R	57	134	0.425	9.6	A
		772	1809	0.427	0.7	A
South: CC South Approach						
32	L	160	120	1.333*	263.7	F
33	R	30	362	0.083	15.8	C
		190	482	1.333	224.6	F
East: PR-3 East Approach						
22	LT	1066	1779	0.599	10.9	B
		1066	1779	0.599	10.9	B
ALL VEHICLES:		2028	4069	1.333	27.0	D

Level of Service calculations are based on average control delay including geometric delay (HCM criteria), independent of the current delay definition used.
For the criteria, refer to the "Level of Service" topic in the aaSIDRA Output Guide or the Output section of the on-line help.
* Maximum v/c ratio, or critical green periods

--- End of aaSIDRA Output ---

Akcelik & Associates Pty Ltd - aaSIDRA 2.0.0.205

FJRP
Francisco J. Reyes P Registered User No. 50310
Licence Type: Professional, Single Computer

Time and Date of Analysis 1:32 AM, Mar 23,2005

Filename: C:\Documents and Settings\Francisco\My Documents\Francisco\Humacao\Sea View\Sidra\Com-3AMF.OUT

Castillos de la Monta?a
Int. PR-3 & Acceso a Centro Comercial; Hora Pico AM, Transito proyectado
Intersection ID: 3

aaTraffic SIDRA US Highway Capacity Manual (2000) Version

RUN INFORMATION

Parameter sensitivity run: "Optimum" Maximum Green = 50.0 %

* Basic Parameters:
  Intersection Type: Signalised - Actuated Isolated
  For fully-actuated signal timings, the following specifications will be ignored:
    Any maximum cycle time specification
    Any user-given cycle time (unless phase times also given)
    User-given cycle and phase times (if variable flow scale run)
    Any variable cycle time specification
    Any green split priority specification
  Driving on the right-hand side of the road
  Input data specified in US units
  Default Values File No. 11
  Peak flow period (for performance): 15 minutes
  Unit time (for volumes): 60 minutes (Total Flow Period)
  Delay definition: Control delay
                    Geometric delay included
  HCM Delay and Queue Models option selected
  Level of Service based on: Delay (HCM method)
  Queue definition: Back of queue, 95th Percentile

* No. of Main (Timing-Capacity) Iterations = 3
  Comparison of last two iterations:
    Difference in intersection degree of satn = 0.0 %
    Difference in total vehicle capacity   = 0.0 %
    Largest difference in eff. green times = 0 secs
    (max. value for stopping = 0 secs)

Castillos de la Monta?a
Int. PR-3 & Acceso a Centro Comercial; Hora Pico AM, Transito proyectado
Intersection ID: 3

DEFAULT PARAMETERS

Default values for some of the important general parameters:
(Default Values File: DEF11.SDF)

1. Basic saturation flow: 1900 tcu/h

   This value applies mainly to signalised intersections. For roundabouts and sign-controlled intersections, it is used for determining capacity of priority and continuous movements.

2. Through car equivalents for signalised intersections

	LEFT		THROUGH		RIGHT	
	LV	HV	LV	HV	LV	HV
Normal	1.053	2.000	1.000	2.000	1.176	2.000
Restricted	1.303	2.500			1.426	2.500

3. Opposed turn parameters (Signalised intersection)

	Crit. Gap	Fol.up Hdway	Deps at End	% Exit Flow Opposing
Left turns :	4.5	2.5	2.0	0
Right turns:	4.0	2.4	2.5	0

4. Cruise speed= 40 mi/h, Approach Distance= 1800 ft

5. Queue space per vehicle in feet
   Light vehicles: 25.0 Heavy vehicles: 45.0

A full list of input data defaults and ranges is given in the Input Guide part of aaSIDRA User Guide.

Castillos de la Monta?a
Int. PR-3 & Acceso a Centro Comercial; Hora Pico AM, Transito proyectado
Intersection ID: 3
Actuated Isolated Signals, Cycle Time = 52

Table S.0 - TRAFFIC FLOW DATA

Mov No.	Left LV	Left HV	Through LV	Through HV	Right LV	Right HV	Flow Scale	Peak Flow Factor
VEHICLES Demand flows in veh/hour as used by the program								
West: PR-3 West Approach								
12	265	5	0	0	0	0	1.00	0.88
11	0	0	1018	42	0	0	1.00	0.88
East: PR-3 East Approach								
21	0	0	1147	30	0	0	1.00	0.88
23	0	0	0	0	40	2	1.00	0.88
North: Cent. Com. North Approach								
42	33	0	0	0	0	0	1.00	0.88
43	0	0	0	0	105	0	1.00	0.88

Based on unit time = 60 minutes.
Flow Scale and Peak Hour Factor effects included in flow values.

Castillos de la Monta?a
Int. PR-3 & Acceso a Centro Comercial; Hora Pico AM, Transito proyectado
Intersection ID: 3
Actuated Isolated Signals, Cycle Time = 52

Table S.1 - MOVEMENT PHASE AND TIMING PARAMETERS

Mov No.	Mov Typ	PHASE MATRIX First Green Fr	To	Op	Pr	Second Green Fr	To	Op	Pr	Lost Tim 1st Grn	Lost Tim 2nd Grn	Req.Mov.Time 1st Grn	Req.Mov.Time 2nd Grn	Eff. Grn 1st Grn	Eff. Grn 2nd Grn
West: PR-3 West Approach															
12 L		*A	B							4		14.0Max		10	
11 T		B	D							4		26.1		24	
East: PR-3 East Approach															
21 T		B	D							4		27.6		24	
23 R	(Un2)	*B	D			D	B	R		4	11	27.6	22.5	24	13
North: Cent. Com. North Approach															
42 L		D	A							4		10.0Min		6	
43 R	(Un1)	A	D	R		*D	A			17	4	21.5	10.0Min	25	6

Current Phase Sequence No.: 1
Input phase sequence: A B D
Output phase sequence: A B D

Movement Types:
- Ped Pedestrian
- Dum Dummy
- Und Undetected in both green periods
- Un1 Undetected in 1st green period
- Un2 Undetected in 2nd green period

Under heading 'Op':
- L "Left" turns are opposed
- R "Right" turns are opposed
- LR "Left and Right" opposed
- C "Constant" saturation flow

Castillos de la Monta?a
Int. PR-3 & Acceso a Centro Comercial; Hora Pico AM, Transito proyectado
Intersection ID: 3
Actuated Isolated Signals, Cycle Time = 52

Table S.2 - MOVEMENT CAPACITY PARAMETERS

Mov No.	Dem Flow (veh /h)	Satn Flow 1st Grn	Satn Flow 2nd Grn	Flow Ratio 1st Grn	Flow Ratio 2nd Grn	Total Cap. (veh /h)	Prac. Deg. Satn xp	Prac. Spare Cap. (%)	Lane Util (%)	Deg. Satn x
West: PR-3 West Approach										
12 L	270	1775		0.152		341	0.90	14	100	0.791*
11 T	1060	3655		0.290		1687	0.90	43	100	0.628
East: PR-3 East Approach										
21 T	1177	3542		0.332		1635	0.90	25	100	0.720
23 R	42	0	233	0.368	0.179	59	0.90	26	100	0.715

North: Cent. Com. North Approach										
42	L	33	1805		0.018		208	0.90	468	100	0.158
43	R	105	885	1615	0.034	0.046	612	0.90	424	100	0.172

Castillos de la Monta?a
Int. PR-3 & Acceso a Centro Comercial; Hora Pico AM, Transito proyectado
Intersection ID: 3
Actuated Isolated Signals, Cycle Time = 52

Table S.3 - INTERSECTION PARAMETERS

Crit Mov No.	App. & Turn	Green Period	Phases Fr	Phases To	Adjusted Lost Time	Adjusted Flow Ratio	Required Grn Time Ratio	Required Movement Time
12	W_L		A	B	14	-	-	14.0Max
23	E_R	1st	B	D	4	0.368	0.454	27.6
43	N_R	2nd	D	A	10	-	-	10.0Min
				Total:	28	0.368	0.454	51.6

- Flow ratio not used for cycle time calculations and the adjusted lost time equals the required movement time (=Min or Max as shown in Table S.1)

Cycle Time:

Minimum	Maximum	Practical	Chosen
30	NA	52	52

Intersection Level of Service	=	B
Worst movement Level of Service	=	D
Average intersection delay (s)	=	18.5
Largest average movement delay (s)	=	44.9
Largest back of queue, 95% (ft)	=	429
Performance Index	=	91.48
Degree of saturation (highest)	=	0.791
Practical Spare Capacity (lowest)	=	14 %
Total vehicle capacity, all lanes (veh/h)	=	4541
Total vehicle flow (veh/h)	=	2687
Total person flow (pers/h)	=	3224
Total vehicle delay (veh-h/h)	=	13.82
Total person delay (pers-h/h)	=	16.58
Total effective vehicle stops (veh/h)	=	2015
Total effective person stops (pers/h)	=	2418
Total vehicle travel (veh-mi/h)	=	1119.9
Total cost ($/h)	=	510.30
Total fuel (ga/h)	=	58.6
Total CO2 (kg/h)	=	555.02

Castillos de la Monta?a
Int. PR-3 & Acceso a Centro Comercial; Hora Pico AM, Transito proyectado
Intersection ID: 3
Actuated Isolated Signals, Cycle Time = 52

Table S.4 - PHASE INFORMATION

Phase No.	Change Time	Green Start	Displayed Green	Grn+Intgrn Secs	Prop.
A	0	4	10	14	0.269
B	14	18	24	28	0.538
D	42	46	6	10	0.192

Current Phase Sequence No.: 1
Input phase sequence: A B D
Output phase sequence: A B D

Castillos de la Monta?a
Int. PR-3 & Acceso a Centro Comercial; Hora Pico AM, Transito proyectado
Intersection ID: 3
Actuated Isolated Signals, Cycle Time = 52

Table S.8 - LANE FLOW AND CAPACITY INFORMATION

Lan No.	Mov No.	Dem Flow (veh/h) Lef	Thru	Rig	Tot	Lane Width (ft)	Saturation Flow Adj. Basic (tcu)	Aver 1st (veh)	Aver 2nd (veh)	End Cap (veh /h)	Tot Cap (veh /h)	Deg. Satn x	Lane Util %
West: PR-3 West Approach													
1 L	12	270	0	0	270	12.0	1900	1775	0	0	341	0.791	100
2 T	11	0	530	0	530	12.0	1900	1828	0	0	844	0.628	100
3 T	11	0	530	0	530	12.0	1900	1828	0	0	844	0.628	100
East: PR-3 East Approach													
1 T	21	0	616	0	616	12.0	1900	1853	0	0	855	0.720	100
2 TR	21, 23	0	561	42	603	12.0	1900	269	1804	69	838	0.720	100
North: Cent. Com. North Approach													
1 L	42	33	0	0	33	12.0	1900	1805	0	0	208	0.158	100
2 R	43	0	0	105	105	12.0	1900	885	1615	69	612	0.172	100

Basic Saturation Flow in this table is adjusted for lane width, approach grade, parking manoeuvres and number of buses stopping. Saturation flow scale applies if specified.

Castillos de la Monta?a
Int. PR-3 & Acceso a Centro Comercial; Hora Pico AM, Transito proyectado
Intersection ID: 3
Actuated Isolated Signals, Cycle Time = 52

Table S.10 - MOVEMENT CAPACITY AND PERFORMANCE SUMMARY

Mov No.	Mov Typ	Dem Flow (veh /h)	Total Cap. (veh /h)	Lane Util (%)	Deg. Satn x	Eff. Grn 1st Grn	Eff. Grn 2nd Grn	Aver. Delay (sec)	Eff. Stop Rate	95% Back of Queue (veh)	Perf. Index

West: PR-3 West Approach											
12	L		270	341	100	0.791*	10*		44.9	0.89	10.1	12.66
11	T		1060	1687	100	0.628	24		13.7	0.70	13.6	33.48
East: PR-3 East Approach												
21	T		1177	1635	100	0.720	24		16.5	0.76	16.8	39.82
23	R	(Un2)	42	59	100	0.715	24*	13	26.9	0.88	16.4	1.56
North: Cent. Com. North Approach												
42	L		33	208	100	0.158	6		34.2	0.72	1.1	1.32
43	R	(Un1)	105	612	100	0.172	25	6*	13.6	0.76	1.5	2.64

* Maximum degree of saturation, or critical green periods

Castillos de la Monta?a
Int. PR-3 & Acceso a Centro Comercial; Hora Pico AM, Transito proyectado
Intersection ID: 3
Actuated Isolated Signals, Cycle Time = 52

Table S.14 - SUMMARY OF INPUT AND OUTPUT DATA

Lane No.	Demand Flow (veh/h) L	T	R	Tot	%HV	Adj. Basic Satf.	Eff Grn (secs) 1st	2nd	Deg Sat x	Aver. Delay (sec)	Longest Queue (ft)	Shrt Lane (ft)
West: PR-3 West Approach												
1 L	270			270	2	1900	10		0.791	44.9	256*	160
2 T		530		530	4	1900	24		0.628	13.7	350	
3 T		530		530	4	1900	24		0.628	13.7	350	
	270	1060	0	1330	4				0.791	20.0	350	
East: PR-3 East Approach												
1 T		616		616	3	1900	24		0.720	16.0	429	
2 TR		561	42	603	3	1900	1	24	0.720	17.7	418	
	0	1177	42	1219	3				0.720	16.8	429	
North: Cent. Com. North Approach												
1 L	33			33	0	1900	6		0.158	34.2	28	
2 R			105	105	0	1900	25	6	0.172	13.6	37	
	33	0	105	138	0				0.172	18.5	37	

ALL VEHICLES	Total Flow	% HV	Cycle Time	Max X	Aver. Delay	Max Queue
	2687	3	52	0.791	18.5	429

Total flow period = 60 minutes. Peak flow period = 15 minutes.

Queue values in this table are 95% back of queue (feet).

Note: Basic Saturation Flows (in through car units) have been adjusted for grade, lane widths, parking manoeuvres and bus stops.

* Queue length exceeds short lane length due to specification of a percentile queue in the aaSIDRA Configuration File. For calculation

of this statistic, you may specify the lane with full length.

Castillos de la Monta?a
Int. PR-3 & Acceso a Centro Comercial; Hora Pico AM, Transito proyectado
Intersection ID: 3
Actuated Isolated Signals, Cycle Time = 52

Table S.15 - CAPACITY AND LEVEL OF SERVICE

Mov No.	Mov Typ	Green Ratio (g/C) 1st grn	Green Ratio (g/C) 2nd grn	Total Flow (veh /h)	Total Cap. (veh /h)	Deg. of Satn (v/c)	Aver. Delay (sec)	LOS
West: PR-3 West Approach								
12	L	0.192*		270	341	0.791*	44.9	D
11	T	0.462		1060	1687	0.628	13.7	B
				1330	2028	0.791	20.0	C
East: PR-3 East Approach								
21	T	0.462		1177	1635	0.720	16.5	B
23	R (Un2)	0.462*	0.250	42	59	0.715	26.9	C
				1219	1693	0.720	16.8	B
North: Cent. Com. North Approach								
42	L	0.115		33	208	0.158	34.2	C
43	R (Un1)	0.481	0.115*	105	612	0.172	13.6	B
				138	820	0.172	18.5	B
ALL VEHICLES:				2687	4541	0.791	18.5	B
INTERSECTION (persons):				3224	4541	0.791	18.5	

Level of Service calculations are based on
average control delay including geometric delay (HCM criteria),
independent of the current delay definition used.
For the criteria, refer to the "Level of Service" topic in the
aaSIDRA Output Guide or the Output section of the on-line help.
* Maximum v/c ratio, or critical green periods

Castillos de la Monta?a
Int. PR-3 & Acceso a Centro Comercial; Hora Pico AM, Transito proyectado
Intersection ID: 3

Table S.23 - SENSITIVITY ANALYSIS RESULTS

Performance Measure	Smallest Value	Param Scale

Degree of Satn	0.733	60
Average Delay	18.5	50
Stop Rate	0.75	50
Max. Queue for Any Movement	16.8	50
Perf. Index	91.5	50
Cost total	510.3	50

Performance Measure	Largest Value	Param Scale
Total Vehicle Cap.	4541	50
Prac. Spare Cap.	23	60

Castillos de la Monta?a
Int. PR-3 & Acceso a Centro Comercial; Hora Pico AM, Transito proyectado
Intersection ID: 3

Scaled sensitivity parameter: Maximum Green

Table V.23 - INTERSECTION SUMMARY FOR VARIABLE PARAMETER SCALE

Param Scale (%)	Cycle Time (sec)	Total Veh. Cap.	Intersn Deg. of Satn	Prac. Spare Cap.	Aver. Delay (sec)	Stop Rate	Longest Queue (veh)	Perf. Index	Cost Total $/h
50	52	4541	0.791	14	18.5	0.75	16.8	91.5	510.3
55	53	4507	0.735	23	18.8	0.76	17.4	92.9	513.5
60	55	4529	0.733	23	19.0	0.75	18.0	94.1	515.0
65	57	4507	0.744	21	19.6	0.75	18.5	95.8	519.9
70	58	4454	0.745	21	20.3	0.76	19.1	97.8	526.5
75	60	4458	0.753	20	20.7	0.76	19.5	99.2	529.7
80	61	4408	0.754	19	21.5	0.77	20.1	101.2	536.3
85	63	4409	0.761	18	21.9	0.77	20.6	102.7	539.8
90	64	4362	0.765	18	22.7	0.78	21.2	104.7	546.5
95	66	4363	0.771	17	23.1	0.77	21.7	106.1	550.1
100	67	4319	0.774	16	23.9	0.78	22.3	108.2	557.0
105	69	4321	0.782	15	24.3	0.78	22.8	109.6	560.4
110	70	4280	0.783	15	25.2	0.79	23.4	111.7	567.5
115	72	4283	0.792	14	25.6	0.79	23.9	113.1	570.9
120	73	4243	0.792	14	26.4	0.79	24.5	115.2	578.1

--- End of aaSIDRA Output ---

Akcelik & Associates Pty Ltd - aaSIDRA 2.0.0.205

FJRP
Francisco J. Reyes P Registered User No. 50310
Licence Type: Professional, Single Computer

Time and Date of Analysis 1:50 AM, Mar 23,2005

Filename: C:\Documents and Settings\Francisco\My Documents\Francisco\Humacao\Sea View\Sidra\53-VH-3AMF.OUT

Castillos de la Monta?a
InT. PR-3, Rampa PR-53 & Acceso V.H.; Hora Pico AM, Transito proyectado
Intersection ID: 4

aaTraffic SIDRA US Highway Capacity Manual (2000) Version

RUN INFORMATION

Parameter sensitivity run: "Optimum" Maximum Green = 105.0 %

* Basic Parameters:
  Intersection Type: Signalised - Actuated Isolated
  For fully-actuated signal timings, the following specifications will be ignored:
    Any maximum cycle time specification
    Any user-given cycle time (unless phase times also given)
    User-given cycle and phase times (if variable flow scale run)
    Any variable cycle time specification
    Any green split priority specification
  Driving on the right-hand side of the road
  Input data specified in US units
  Default Values File No. 11
  Peak flow period (for performance): 15 minutes
  Unit time (for volumes): 60 minutes (Total Flow Period)
  Delay definition: Control delay
                    Geometric delay included
  HCM Delay and Queue Models option selected
  Level of Service based on: Delay (HCM method)
  Queue definition: Back of queue, 95th Percentile

* No. of Main (Timing-Capacity) Iterations = 3
  Comparison of last two iterations:
    Difference in intersection degree of satn = 0.7 %
    Difference in total vehicle capacity = 0.2 %
    Largest difference in eff. green times = 1 secs
    (max. value for stopping = 2 secs)
  Information on Previous Iteration:
    Cycle Time = 148
    Phase Times: 0, 25, 81, 123
    Critical Movements: 12, 21, 41, 32

* Movement 12 has large x because of short lanes.
  The degree of saturation of adjacent movement 11 is less than xp,
  hence this solution may be satisfactory.
  See Table S.7 for queue length, delay etc.

Castillos de la Monta?a

InT. PR-3, Rampa PR-53 & Acceso V.H.; Hora Pico AM, Transito proyectado
Intersection ID: 4

DEFAULT PARAMETERS

Default values for some of the important general parameters:
(Default Values File: DEF11.SDF)

1. Basic saturation flow: 1900 tcu/h

   This value applies mainly to signalised intersections. For roundabouts and sign-controlled intersections, it is used for determining capacity of priority and continuous movements.

2. Through car equivalents for signalised intersections

	L E F T		THROUGH		R I G H T	
	LV	HV	LV	HV	LV	HV
Normal	1.053	2.000	1.000	2.000	1.176	2.000
Restricted	1.303	2.500			1.426	2.500

3. Opposed turn parameters (Signalised intersection)

	Crit. Gap	Fol.up Hdway	Deps at End	% Exit Flow Opposing
Left turns :	4.5	2.5	2.0	0
Right turns:	4.0	2.4	2.5	0

4. Cruise speed= 40 mi/h, Approach Distance= 1800 ft

5. Queue space per vehicle in feet
   Light vehicles: 25.0 Heavy vehicles: 45.0

A full list of input data defaults and ranges is given in the Input Guide part of aaSIDRA User Guide.

Castillos de la Monta?a
InT. PR-3, Rampa PR-53 & Acceso V.H.; Hora Pico AM, Transito proyectado
Intersection ID: 4
Actuated Isolated Signals, Cycle Time = 147

Table S.0 - TRAFFIC FLOW DATA

Mov No.	Left		Through		Right		Flow Scale	Peak Flow Factor
	LV	HV	LV	HV	LV	HV		
VEHICLES	Demand flows in veh/hour as used by the program							
West: PR-. West Approach								
12	224	9	0	0	0	0	1.00	0.88
11	0	0	783	41	0	0	1.00	0.88
13	0	0	0	0	167	2	1.00	0.88
South: South Approach								
32	368	0	0	0	0	0	1.00	0.88
31	0	0	25	0	0	0	1.00	0.88
33	0	0	0	0	98	0	1.00	0.92

East: PR-3 East Approach								
22	89	9	0	0	0	0	1.00	0.88
21	0	0	1102	31	0	0	1.00	0.88
23	0	0	0	0	22	0	1.00	0.88
North: Ramp PR-53 North Approach								
42	300	5	0	0	0	0	1.00	0.88
41	0	0	55	0	0	0	1.00	0.88
43	0	0	0	0	550	5	1.00	0.88

Based on unit time = 60 minutes.
Flow Scale and Peak Hour Factor effects included in flow values.

Castillos de la Monta?a
InT. PR-3, Rampa PR-53 & Acceso V.H.; Hora Pico AM, Transito proyectado
Intersection ID: 4
Actuated Isolated Signals, Cycle Time = 147

Table S.1 - MOVEMENT PHASE AND TIMING PARAMETERS

Mov No.	Mov Typ	PHASE MATRIX First Green Fr	To	Op	Pr	Second Green Fr	To	Op	Pr	Lost Tim 1st Grn	Lost Tim 2nd Grn	Req.Mov.Time 1st Grn	Req.Mov.Time 2nd Grn	Eff. Grn 1st Grn	Eff. Grn 2nd Grn
West: PR-. West Approach															
12 L		*A	B							4		25.0Max		21	
11 LT		B	C							4		48.4		52	
13 R	(Und)	B	C			C	B	R		4	7	32.7	30.0Min	52	84
South: South Approach															
32 L		*D	A							4		25.0Max		21	
31 T		D	A							4		23.2		21	
33 R	(Und)	A	D	R		D	A			32	4	30.0Min	20.6	90	21
East: PR-3 East Approach															
22 L		A	B							4		25.0Max		21	
21 T		*B	C							4		55.8		52	
23 R	(Und)	B	C			C	B	R		4	5	56.0Max	30.0Min	52	86
North: Ramp PR-53 North Approach															
42 L		C	D							4		25.0Max		37	
41 T		*C	D							4		39.4		37	
43 R	(Und)	C	D			D	C	R		4	47	56.0Max	56.0Max	37	59

Current Phase Sequence No.: 1
Input phase sequence: A B C D
Output phase sequence: A B C D

Movement Types:
- Ped Pedestrian
- Dum Dummy
- Und Undetected in both green periods
- Un1 Undetected in 1st green period
- Un2 Undetected in 2nd green period

Under heading 'Op':
- L "Left" turns are opposed
- R "Right" turns are opposed
- LR "Left and Right" opposed
- C "Constant" saturation flow

Castillos de la Monta?a
InT. PR-3, Rampa PR-53 & Acceso V.H.; Hora Pico AM, Transito proyectado
Intersection ID: 4
Actuated Isolated Signals, Cycle Time = 147

Table S.2 - MOVEMENT CAPACITY PARAMETERS

Mov No.	Dem Flow (veh /h)	Satn Flow 1st Grn	Satn Flow 2nd Grn	Flow Ratio 1st Grn	Flow Ratio 2nd Grn	Total Cap. (veh /h)	Prac. Deg. Satn xp	Prac. Spare Cap. (%)	Lane Util (%)	Deg. Satn x
West: PR-. West Approach										
12 L	227	1592<		0.143		227	0.90	-10	100	1.000
11 LT	830E	3619		0.229		1280	0.90	39	100	0.648
13 R	169	1182<	1189<	0.079	0.063	1098	0.90	484	100	0.154
South: South Approach										
32 L	368	1805		0.204		258	0.90	-37	100	1.427*
31 T	25	479		0.052		68	0.90	146	26	0.365
33 R	98	150	1235	0.000	0.079	268	0.90	146	26	0.365
East: PR-3 East Approach										
22 L	98	1535<		0.064		219	0.90	101	100	0.447
21 T	1133	3628		0.312		1283	0.90	2	100	0.883
23 R	22	62	5	0.342	0.164	25	0.90	2	100	0.885
North: Ramp PR-53 North Approach										
42 L	305	1796		0.170		452	0.90	33	100	0.675
41 T	55	353		0.156		89	0.90	45	92	0.619
43 R	555	170	2126	0.318	0.236	896	0.90	45	92	0.619

E "Excess" flow from the short lane of an adjacent movement added to normal flow
< Reduced saturation flow due to a short lane effect

Movement 12 has large x because of short lanes.
The degree of saturation of adjacent movement 11 is less than xp, hence this solution may be satisfactory.
See Table S.7 for queue length, delay etc.

Castillos de la Monta?a
InT. PR-3, Rampa PR-53 & Acceso V.H.; Hora Pico AM, Transito proyectado
Intersection ID: 4
Actuated Isolated Signals, Cycle Time = 147

Table S.3 - INTERSECTION PARAMETERS

Crit Mov No.	App. & Turn	Green Period	Phases Fr	Phases To	Adjusted Lost Time	Adjusted Flow Ratio	Required Grn Time Ratio	Required Movement Time
12	W_L		A	B	25	-	-	25.0Max
21	E_T		B	C	4	0.312	0.353	55.8
41	N_T		C	D	4	0.156	0.241	39.4
32	S_L		D	A	25	-	-	25.0Max

Total:	58	0.468	0.593	145.2

- Flow ratio not used for cycle time calculations and the adjusted lost time equals the required movement time (=Min or Max as shown in Table S.1)

Cycle Time:

Minimum	Maximum	Practical	Chosen
40	NA	143	147

Intersection Level of Service	=	E
Worst movement Level of Service	=	F
Average intersection delay (s)	=	76.6
Largest average movement delay (s)	=	294.6
Largest back of queue, 95% (ft)	=	1266
Performance Index	=	311.34
Degree of saturation (highest)	=	1.427
Practical Spare Capacity (lowest)	=	-37 %
Total vehicle capacity, all lanes (veh/h)	=	6164
Total vehicle flow (veh/h)	=	3885
Total person flow (pers/h)	=	4662
Total vehicle delay (veh-h/h)	=	82.63
Total person delay (pers-h/h)	=	99.16
Total effective vehicle stops (veh/h)	=	3568
Total effective person stops (pers/h)	=	4281
Total vehicle travel (veh-mi/h)	=	1617.0
Total cost ($/h)	=	1362.79
Total fuel (ga/h)	=	112.7
Total CO2 (kg/h)	=	1067.21

Castillos de la Monta?a
InT. PR-3, Rampa PR-53 & Acceso V.H.; Hora Pico AM, Transito proyectado
Intersection ID: 4
Actuated Isolated Signals, Cycle Time = 147

Table S.4 - PHASE INFORMATION

Phase No.	Change Time	Green Start	Displayed Green	Grn+Intgrn Secs	Prop.
A	0	4	21	25	0.170
B	25	29	52	56	0.381
C	81	85	37	41	0.279
D	122	126	21	25	0.170

Current Phase Sequence No.: 1
Input phase sequence: A B C D
Output phase sequence: A B C D

Castillos de la Monta?a
InT. PR-3, Rampa PR-53 & Acceso V.H.; Hora Pico AM, Transito proyectado
Intersection ID: 4
Actuated Isolated Signals, Cycle Time = 147

Table S.8 - LANE FLOW AND CAPACITY INFORMATION

Lan No.	Mov No.	Dem Flow (veh/h) Lef	Thru	Rig	Tot	Lane Width (ft)	Saturation Flow Adj. Basic (tcu)	Aver 1st (veh)	Aver 2nd (veh)	End Cap (veh /h)	Tot Cap (veh /h)	Deg. Satn x	Lane Util %
West: PR-. West Approach													
1 L	12	227	0	0	227	12.0	1900	1592<	0	0	227	1.000	100
2 LT	11	6E	409	0	415	12.0	1900	1809	0	0	640	0.648	100
3 T	11	0	415	0	415	12.0	1900	1810	0	0	640	0.648	100
4 R	13	0	0	169	169	12.0	1900	1182<	1189<	24	1098	0.154	100
South: South Approach													
1 L	32, 31	368	0	0	368	12.0	1900	1805	0	0	258	1.427	100
2 TR	31, 33	0	25	98	123	12.0	1900	1316	1666	24	336	0.366	26P
East: PR-3 East Approach													
1 L	22	98	0	0	98	12.0	1900	1535<	0	0	219	0.447	100
2 T	21	0	578	0	578	12.0	1900	1849	0	0	654	0.883	100
3 TR	21, 23	0	555	22	577	12.0	1900	1839	513	24	654	0.883	100
North: Ramp PR-53 North Approach													
1 L	42, 41	305	0	0	305	12.0	1900	1796	0	0	452	0.675	100
2 TR	41, 43	0	55	555	610	12.0	1900	2582	2309	24*	985	0.619	92P

E "Excess" flow from back of an adjacent short lane
< Reduced saturation flow due to a short lane effect
* Large end capacity has resulted in a saturation flow which is larger than the full unopposed saturation flow
P Lane under-utilisation found by the "Program"

Basic Saturation Flow in this table is adjusted for lane width, approach grade, parking manoeuvres and number of buses stopping. Saturation flow scale applies if specified.

Castillos de la Monta?a
InT. PR-3, Rampa PR-53 & Acceso V.H.; Hora Pico AM, Transito proyectado
Intersection ID: 4
Actuated Isolated Signals, Cycle Time = 147

Table S.10 - MOVEMENT CAPACITY AND PERFORMANCE SUMMARY

Mov No.	Mov Typ	Dem Flow (veh /h)	Total Cap. (veh /h)	Lane Util (%)	Deg. Satn x	Eff. Grn 1st Grn	Eff. Grn 2nd Grn	Aver. Delay (sec)	Eff. Stop Rate	95% Back of Queue (veh)	Perf. Index
West: PR-. West Approach											
12 L		227	227<	100	1.000	21*		80.7	0.83	18.6	18.59
11 LT		830E	1280	100	0.648	52		46.5	0.77	28.6	55.76
13 R	(Und)	169	1098<	100	0.154	52	84	9.5	0.66	1.2	3.40

South:	South Approach											
32	L		368	258	100	1.427*	21*		294.6	1.48	50.6	68.54
31	T		25	68	26	0.365	21		34.1	0.70	7.2	1.33
33	R	(Und)	98	268	26	0.365	90	21	43.5	0.79	7.2	5.53
East:	PR-3 East Approach											
22	L		98	219<	100	0.447	21		76.1	0.79	8.5	7.81
21	T		1133	1283	100	0.883	52*		62.8	0.93	44.9	91.31
23	R	(Und)	22	25	100	0.885	52	86	71.9	0.93	44.7	1.82
North:	Ramp PR-53 North Approach											
42	L		305	452	100	0.675	37		68.7	0.85	23.6	23.64
41	T		55	89	92	0.619	37*		31.2	0.95	29.9	2.90
43	R	(Und)	555	896	92	0.619	37	59	40.5	0.95	29.9	30.70

E "Excess" flow from the short lane of an adjacent movement added to normal flow
< Reduced capacity due to a short lane effect
* Maximum degree of saturation, or critical green periods

Castillos de la Monta?a
InT. PR-3, Rampa PR-53 & Acceso V.H.; Hora Pico AM, Transito proyectado
Intersection ID: 4
Actuated Isolated Signals, Cycle Time = 147

Table S.14 - SUMMARY OF INPUT AND OUTPUT DATA

Lane No.	Demand Flow (veh/h) L	T	R	Tot	%HV	Adj. Basic Satf.	Eff Grn (secs) 1st	2nd	Deg Sat x	Aver. Delay (sec)	Longest Queue (ft)	Shrt Lane (ft)
West:	PR-. West Approach											
1 L	227			227	4	1900	21		1.000	80.7r	479*	260
2 LT	227	409		415	7	1900	52		0.648	46.5	742	
3 T		415		415	5	1900	52		0.648	46.5	743	
4 R			169	169	1	1900	52	84	0.154	9.5	30	260
	233	824	169	1226	5				1.000	47.8	743	
South:	South Approach											
1 L	368			368	0	1900	21		1.427	294.6	1266	
2 TR		25	98	123	0	1900	11	21	0.366	41.6	181	
	368	25	98	491	0				1.427	231.2	1266	
East:	PR-3 East Approach											
1 L	98			98	9	1900	21		0.447	76.1	227	260
2 T		578		578	3	1900	52		0.883	63.2	1147	
3 TR		555	22	577	3	1900	52	1	0.883	62.9	1140	
	98	1133	22	1253	3				0.883	64.0	1147	
North:	Ramp PR-53 North Approach											
1 L	305			305	2	1900	37		0.675	68.7	599	
2 TR		55	555	610	1	1900	23	37	0.619	39.7	754	
	305	55	555	915	1				0.675	49.5	754	

ALL VEHICLES	Total Flow	% HV	Cycle Time	Max X	Aver. Delay	Max Queue
	3885	3	147	1.427	76.6	1266

Total flow period = 60 minutes. Peak flow period = 15 minutes.

Queue values in this table are 95% back of queue (feet).

Note: Basic Saturation Flows (in through car units) have been adjusted for grade, lane widths, parking manoeuvres and bus stops.

* Queue length exceeds short lane length due to specification of a percentile queue in the aaSIDRA Configuration File. For calculation of this statistic, you may specify the lane with full length.

r Delay, stops and queue length for this lane have been cut down to fit in the queuing space. The amount cut may not be accounted for fully in the adjacent lane performance statistics. You may wish to change the short lane to a full lane to investigate the extent of this effect.

Castillos de la Monta?a
InT. PR-3, Rampa PR-53 & Acceso V.H.; Hora Pico AM, Transito proyectado
Intersection ID: 4
Actuated Isolated Signals, Cycle Time = 147

Table S.15 - CAPACITY AND LEVEL OF SERVICE

Mov No.	Mov Typ	Green Ratio (g/C) 1st grn	2nd grn	Total Flow (veh /h)	Total Cap. (veh /h)	Deg. of Satn (v/c)	Aver. Delay (sec)	LOS
West: PR-. West Approach								
12 L		0.143*		227	227<	1.000	80.7	F
11 LT		0.354		830E	1280	0.648	46.5	D
13 R	(Und)	0.354	0.571	169	1098<	0.154	9.5	A
				1226	2605	1.000	47.8	D
South: South Approach								
32 L		0.143*		368	258	1.427*	294.6	F
31 T		0.143		25	68	0.365	34.1	C
33 R	(Und)	0.612	0.143	98	268	0.365	43.5	D
				491	595	1.427	231.2	F
East: PR-3 East Approach								
22 L		0.143		98	219<	0.447	76.1	E
21 T		0.354*		1133	1283	0.883	62.8	E
23 R	(Und)	0.354	0.585	22	25	0.885	71.9	E
				1253	1528	0.885	64.0	E
North: Ramp PR-53 North Approach								
42 L		0.252		305	452	0.675	68.7	E
41 T		0.252*		55	89	0.619	31.2	C
43 R	(Und)	0.252	0.401	555	896	0.619	40.5	D

	915	1437	0.675	49.4	D
ALL VEHICLES:	3885	6164	1.427	76.6	E
INTERSECTION (persons):	4662	6164	1.427	76.6	

Level of Service calculations are based on
average control delay including geometric delay (HCM criteria),
independent of the current delay definition used.
For the criteria, refer to the "Level of Service" topic in the
aaSIDRA Output Guide or the Output section of the on-line help.

< Reduced capacity due to a short lane effect
* Maximum v/c ratio, or critical green periods
E "Excess" flow from the short lane of an adjacent movement added to normal flow

---

Castillos de la Monta?a
InT. PR-3, Rampa PR-53 & Acceso V.H.; Hora Pico AM, Transito proyectado
Intersection ID: 4

Table S.23 - SENSITIVITY ANALYSIS RESULTS

Performance Measure	Smallest Value	Param Scale
Degree of Satn	1.317	120
Average Delay	74.6	105
Stop Rate	0.91	105
Max. Queue for Any Movement	47.9	60
Perf. Index	285.2	60
Cost total	1341.9	105

Performance Measure	Largest Value	Param Scale
Total Vehicle Cap.	6235	100
Prac. Spare Cap.	-32	120

Castillos de la Monta?a
InT. PR-3, Rampa PR-53 & Acceso V.H.; Hora Pico AM, Transito proyectado
Intersection ID: 4

Scaled sensitivity parameter: Maximum Green

Table V.23 - INTERSECTION SUMMARY FOR VARIABLE PARAMETER SCALE

Param Scale (%)	Cycle Time (sec)	Total Veh. Cap.	Intersn Deg. of Satn	Prac. Spare Cap.	Aver. Delay (sec)	Stop Rate	Longest Queue (veh)	Perf. Index	Cost Total $/h
50	85	5847	1.733	-48	89.9	1.08	48.4	290.9	1494.1
55	92	5913	1.705	-47	86.7	1.05	48.9	289.7	1460.4
60	96	5979	1.631	-45	82.1	1.02	47.9	285.2	1411.3

65	103	6005	1.615	-44	81.0	1.00	48.6	287.7	1400.4
70	108	6043	1.573	-43	79.1	0.99	48.4	288.3	1381.6
75	114	6100	1.549	-42	77.1	0.97	48.8	288.0	1359.7
80	119	6130	1.516	-41	76.0	0.96	48.7	289.7	1348.8
85	126	6162	1.511	-40	76.6	0.95	49.7	295.0	1356.8
90	131	6187	1.484	-39	76.4	0.94	49.7	298.9	1357.6
95	138	6213	1.481	-39	77.1	0.93	50.7	305.0	1365.2
100	143	6235	1.458	-38	77.1	0.93	50.9	308.5	1365.1
105	145	6183	1.408	-36	74.6	0.91	49.7	304.3	1341.9
110	148	6146	1.372	-34	75.2	0.92	49.1	308.7	1350.2
115	152	6128	1.347	-33	76.0	0.92	49.0	313.6	1360.7
120	155	6123	1.317	-32	75.9	0.91	48.5	315.9	1362.4

--- End of aaSIDRA Output ---

Akcelik & Associates Pty Ltd - aaSIDRA 2.0.0.205

FJRP
Francisco J. Reyes P Registered User No. 50310
Licence Type: Professional, Single Computer

Time and Date of Analysis 1:59 AM, Mar 23,2005

Filename: C:\Documents and Settings\Francisco\My Documents\Francisco\Humacao\Sea View\Sidra\925-3-53AMF.OUT

Castillos de la Monta?as
Int. PR-3, PR-925 & Rampa PR-53; Hora Pico AM, Transito proyectado
Intersection ID: 5

aaTraffic SIDRA US Highway Capacity Manual (2000) Version

RUN INFORMATION

Parameter sensitivity run: "Optimum" Maximum Green = 105.0 %

* Basic Parameters:
  Intersection Type: Signalised - Actuated Isolated
  For fully-actuated signal timings, the following specifications will be ignored:
    Any maximum cycle time specification
    Any user-given cycle time (unless phase times also given)
    User-given cycle and phase times (if variable flow scale run)
    Any variable cycle time specification
    Any green split priority specification
  Driving on the right-hand side of the road
  Input data specified in US units
  Default Values File No. 11
  Peak flow period (for performance): 15 minutes
  Unit time (for volumes): 60 minutes (Total Flow Period)
  Delay definition: Control delay
                    Geometric delay included
  HCM Delay and Queue Models option selected
  Level of Service based on: Delay (HCM method)
  Queue definition: Back of queue, 95th Percentile

* No. of Main (Timing-Capacity) Iterations = 3
  Comparison of last two iterations:
    Difference in intersection degree of satn = 0.9 %
    Difference in total vehicle capacity   = 0.3 %
    Largest difference in eff. green times = 1 secs
    (max. value for stopping = 3 secs)
  Information on Previous Iteration:
    Cycle Time = 159
    Phase Times: 0, 25, 81, 134
    Critical Movements: 12, 13(1st), 33, 42

Castillos de la Monta?as
Int. PR-3, PR-925 & Rampa PR-53; Hora Pico AM, Transito proyectado
Intersection ID: 5

DEFAULT PARAMETERS

Default values for some of the important general parameters:
(Default Values File: DEF11.SDF)

1. Basic saturation flow: 1900 tcu/h

   This value applies mainly to signalised intersections. For roundabouts and sign-controlled intersections, it is used for determining capacity of priority and continuous movements.

2. Through car equivalents for signalised intersections

	L E F T		THROUGH		R I G H T	
	LV	HV	LV	HV	LV	HV
Normal	1.053	2.000	1.000	2.000	1.176	2.000
Restricted	1.303	2.500			1.426	2.500

3. Opposed turn parameters (Signalised intersection)

	Crit. Gap	Fol.up Hdway	Deps at End	% Exit Flow Opposing
Left turns :	4.5	2.5	2.0	0
Right turns:	4.0	2.4	2.5	0

4. Cruise speed= 40 mi/h, Approach Distance= 1800 ft

5. Queue space per vehicle in feet
   Light vehicles: 25.0 Heavy vehicles: 45.0

A full list of input data defaults and ranges is given in the Input Guide part of aaSIDRA User Guide.

Castillos de la Monta?as
Int. PR-3, PR-925 & Rampa PR-53; Hora Pico AM, Transito proyectado
Intersection ID: 5
Actuated Isolated Signals, Cycle Time = 158

Table S.0 - TRAFFIC FLOW DATA

Mov No.	Left LV	Left HV	Through LV	Through HV	Right LV	Right HV	Flow Scale	Peak Flow Factor
VEHICLES Demand flows in veh/hour as used by the program								
West: PR-3 West Approach								
12	239	9	0	0	0	0	1.00	0.88
11	0	0	995	43	0	0	1.00	0.88
13	0	0	0	0	170	1	1.00	0.88
South: Ramp PR-53 South Approach								
32	480	8	0	0	0	0	1.00	0.88
33	0	0	30	1	109	5	1.00	0.88
East: PR-3 East Approach								
22	355	9	0	0	0	0	1.00	0.88
21	0	0	1478	26	0	0	1.00	0.88
23	0	0	0	0	242	7	1.00	0.88

North: PR-925 North Approach								
42	108	0	0	0	0	0	1.00	0.88
43	0	0	109	0	415	6	1.00	0.88

Based on unit time = 60 minutes.
Flow Scale and Peak Hour Factor effects included in flow values.

Castillos de la Monta?as
Int. PR-3, PR-925 & Rampa PR-53; Hora Pico AM, Transito proyectado
Intersection ID: 5
Actuated Isolated Signals, Cycle Time = 158

Table S.1 - MOVEMENT PHASE AND TIMING PARAMETERS

Mov No.	Mov Typ	PHASE MATRIX First Green Fr To Op Pr	PHASE MATRIX Second Green Fr To Op Pr	Lost Tim 1st Grn	Lost Tim 2nd Grn	Req.Mov.Time 1st Grn	Req.Mov.Time 2nd Grn	Eff. Grn 1st Grn	Eff. Grn 2nd Grn
West: PR-3 West Approach									
12 L		*A B		4		25.0Max		21	
11 LT		B C		4		54.1		52	
13 R	(Un2)	*B C	C B R	4	23	56.0Max	30.0Min	52	79
South: Ramp PR-53 South Approach									
32 L		C D		4		25.0Max		48	
33 TR		*C D		4		51.6		48	
East: PR-3 East Approach									
22 L		A B		4		25.0Max		21	
21 LT		B C		4		56.0Max		52	
North: PR-925 North Approach									
42 L		*D A		4		25.0Max		21	
43 TR	(Un1)	D A		4		38.1		21	

Current Phase Sequence No.: 1
Input phase sequence: A B C D
Output phase sequence: A B C D

Movement Types:
- Ped Pedestrian
- Dum Dummy
- Und Undetected in both green periods
- Un1 Undetected in 1st green period
- Un2 Undetected in 2nd green period

Under heading 'Op':
- L "Left" turns are opposed
- R "Right" turns are opposed
- LR "Left and Right" opposed
- C "Constant" saturation flow

Castillos de la Monta?as
Int. PR-3, PR-925 & Rampa PR-53; Hora Pico AM, Transito proyectado
Intersection ID: 5
Actuated Isolated Signals, Cycle Time = 158

Table S.2 - MOVEMENT CAPACITY PARAMETERS

Mov No.	Dem Flow (veh /h)	Satn Flow 1st Grn	Satn Flow 2nd Grn	Flow Ratio 1st Grn	Flow Ratio 2nd Grn	Total Cap. (veh /h)	Prac. Deg. Satn xp	Prac. Spare Cap. (%)	Lane Util (%)	Deg. Satn x
West: PR-3 West Approach										
12 L	232	1748		0.133		232	0.90	-10	100	1.000
11 LT	1054E	4005<		0.263		1318	0.90	13	100	0.799
13 R	171	519<	86	0.322	0.043	214	0.90	13	100	0.800
South: Ramp PR-53 South Approach										
32 L	488	2034<		0.240		618	0.90	14	100	0.790
33 TR	145	604<		0.240		183	0.90	14	100	0.790
East: PR-3 East Approach										
22 L	235	1766		0.133		235	0.90	-10	100	1.000
21 LT	1633E	5578		0.293		1836	0.90	1	100	0.890
23 R	249	1584		0.157		1584	0.98	523	100	0.157
North: PR-925 North Approach										
42 L	108	1805		0.236		240	0.90	-49	56	1.773*
43 TR	213	1599		0.133		213	0.90	-10	56	1.000

E "Excess" flow from the short lane of an adjacent movement added to normal flow

< Reduced saturation flow due to a short lane effect

Castillos de la Monta?as
Int. PR-3, PR-925 & Rampa PR-53; Hora Pico AM, Transito proyectado
Intersection ID: 5
Actuated Isolated Signals, Cycle Time = 158

Table S.3 - INTERSECTION PARAMETERS

Crit Mov No.	App. & Turn	Green Period	Phases Fr	Phases To	Adjusted Lost Time	Adjusted Flow Ratio	Required Grn Time Ratio	Required Movement Time
12	W_L		A	B	25	-	-	25.0Max
13	W_R	1st	B	C	56	-	-	56.0Max
33	S_TR		C	D	4	0.240	0.301	51.6
42	N_L		D	A	25	-	-	25.0Max
				Total:	110	0.240	0.301	157.6

- Flow ratio not used for cycle time calculations and the adjusted lost time equals the required movement time (=Min or Max as shown in Table S.1)

Cycle Time:

Minimum	Maximum	Practical	Chosen
40	NA	158	158

Intersection Level of Service	=	E
Worst movement Level of Service	=	F
Average intersection delay (s)	=	75.6
Largest average movement delay (s)	=	451.9

Largest back of queue, 95% (ft)	=	3041
Performance Index	=	390.23
Degree of saturation (highest)	=	1.773
Practical Spare Capacity (lowest)	=	-49 %
Total vehicle capacity, all lanes (veh/h)	=	6673
Total vehicle flow (veh/h)	=	4845
Total person flow (pers/h)	=	5814
Total vehicle delay (veh-h/h)	=	101.73
Total person delay (pers-h/h)	=	122.08
Total effective vehicle stops (veh/h)	=	4082
Total effective person stops (pers/h)	=	4898
Total vehicle travel (veh-mi/h)	=	1885.3
Total cost ($/h)	=	1593.25
Total fuel (ga/h)	=	131.4
Total CO2 (kg/h)	=	1244.40

Castillos de la Monta?as
Int. PR-3, PR-925 & Rampa PR-53; Hora Pico AM, Transito proyectado
Intersection ID: 5
Actuated Isolated Signals, Cycle Time = 158

Table S.4 - PHASE INFORMATION

Phase No.	Change Time	Green Start	Displayed Green	Grn+Intgrn Secs	Prop.
A	0	4	21	25	0.158
B	25	29	52	56	0.354
C	81	85	48	52	0.329
D	133	137	21	25	0.158

Current Phase Sequence No.: 1
Input phase sequence: A B C D
Output phase sequence: A B C D

Castillos de la Monta?as
Int. PR-3, PR-925 & Rampa PR-53; Hora Pico AM, Transito proyectado
Intersection ID: 5
Actuated Isolated Signals, Cycle Time = 158

Table S.8 - LANE FLOW AND CAPACITY INFORMATION

Lan No.	Mov No.	Dem Flow (veh/h) Lef	Thru	Rig	Tot	Lane Width (ft)	Saturation Flow Adj. Basic (tcu)	Aver 1st (veh)	Aver 2nd (veh)	End Cap (veh /h)	Tot Cap (veh /h)	Deg. Satn x	Lane Util %
West: PR-3 West Approach													
1 L	12	232	0	0	232	12.0	1900	1748	0	0	232	1.000	100
2 LT	11	16E	464	0	480	12.0	1900	1824	0	0	600	0.799	100
3 T	11	0	480	0	480	12.0	1900	1824	0	0	600	0.799	100
4 TR	11, 13	0	94	171	265	12.0	1900	865<	1225	23	331	0.799	100
South: Ramp PR-53 South Approach													
1 L	32	427	0	0	427	12.0	1900	1779	0	0	540	0.790	100

2 LTR	32, 33	61	31	114	206	12.0	1900	860<	0	0	261	0.790	100
East: PR-3 East Approach													
1 L	22	235	0	0	235	12.0	1900	1766	0	0	235	1.000	100
2 LT	21	129E	410	0	539	12.0	1900	1842	0	0	606	0.890	100
3 T	21	0	547	0	547	12.0	1900	1868	0	0	615	0.890	100
4 T	21	0	547	0	547	12.0	1900	1868	0	0	615	0.890	100
5 R	23	0	0	249	249	12.0	1900	1584	1584	0	1584	0.157	100
North: PR-925 North Approach													
1 LTR	42	108	109E	208E	425	12.0	1900	1805	0	0	240	1.773	100
2 TR	42, 43	0	0	213	213	12.0	1900	1599	0	0	213	1.000	56P

E "Excess" flow from back of an adjacent short lane
< Reduced saturation flow due to a short lane effect
P Lane under-utilisation found by the "Program"

Basic Saturation Flow in this table is adjusted for lane width, approach grade, parking manoeuvres and number of buses stopping. Saturation flow scale applies if specified.

Castillos de la Monta?as
Int. PR-3, PR-925 & Rampa PR-53; Hora Pico AM, Transito proyectado
Intersection ID: 5
Actuated Isolated Signals, Cycle Time = 158

Table S.10 - MOVEMENT CAPACITY AND PERFORMANCE SUMMARY

Mov No.	Mov Typ	Dem Flow (veh /h)	Total Cap. (veh /h)	Lane Util (%)	Deg. Satn x	Eff. Grn 1st Grn	Eff. Grn 2nd Grn	Aver. Delay (sec)	Eff. Stop Rate	95% Back of Queue (veh)	Perf. Index
West: PR-3 West Approach											
12 L		232	232	100	1.000	21*		135.5	0.97	24.8	26.40
11 LT		1054E	1318<	100	0.799	52		59.4	0.83	38.2	82.29
13 R	(Un2)	171E	214<	100	0.800	52*	79	50.9	0.82	16.7	10.74
South: Ramp PR-53 South Approach											
32 L		488	618<	100	0.790	48		72.9	0.89	34.8	40.61
33 TR		145	183<	100	0.790	48*		71.0	0.78	16.9	11.35
East: PR-3 East Approach											
22 L		235	235	100	1.000	21		135.1	0.97	25.0	26.62
21 LT		1633E	1836	100	0.890	52		71.0	0.93	46.0	142.24
23 R	(Con)	249	1584	100	0.157	158		9.2	0.65	6.4 #	4.12
North: PR-925 North Approach											
42 L		108	240	56	1.773*	21*		451.9	1.87	69.2	27.14
43 TR	(Un1)	213	213	56	1.000	21		88.4	0.83	19.0	18.73

E "Excess" flow from the short lane of an adjacent movement added to normal flow
< Reduced capacity due to a short lane effect
* Maximum degree of saturation, or critical green periods
# Largest density (passenger cars per km or mile) for any lane

Castillos de la Monta?as
Int. PR-3, PR-925 & Rampa PR-53; Hora Pico AM, Transito proyectado
Intersection ID: 5
Actuated Isolated Signals, Cycle Time = 158

Table S.14 - SUMMARY OF INPUT AND OUTPUT DATA

Lane No.	Demand Flow (veh/h) L	T	R	Tot	%HV	Adj. Basic Satf.	Eff Grn (secs) 1st	2nd	Deg Sat x	Aver. Delay (sec)	Longest Queue (ft)	Shrt Lane (ft)
West: PR-3 West Approach												
1 L	232			232	4	1900	21		1.000	135.5r	639*	360
2 LT	232	464		480	6	1900	52		0.799	61.2	988	
3 T		480		480	4	1900	52		0.799	61.2	988	
4 TR		94	171	265	2	1900	52	6	0.799	47.5	423*	260
	248	1038	171	1457	4				1.000	70.6	988	
South: Ramp PR-53 South Approach												
1 L	427			427	2	1900	48		0.790	73.0	880	
2 LTR	61	31	114	206	3	1900	48		0.790	71.6	433*	260
	488	31	114	633	2				0.790	72.5	880	250d
East: PR-3 East Approach												
1 L	235			235	2	1900	21		1.000	135.1r	639*	360
2 LT	235	410		539	2	1900	52		0.890	71.1	1154	
3 T		547		547	2	1900	52		0.890	70.9	1165	
4 T		547		547	2	1900	52		0.890	70.9	1165	
5 R			249	249	3	1900	158		0.157	9.2		260
	364	1504	249	2117	2				1.000	70.8	1165	
North: PR-925 North Approach												
1 TR	108	0	213	213	1	1900	21		1.773	88.4	480	
2 TR		0	213	213	1	1900	21		1.000	88.4r	480*	260
	108	109	421	638	1				1.773	331.1	3041	250d

ALL VEHICLES	Total Flow	% HV	Cycle Time	Max X	Aver. Delay	Max Queue
	4845	3	158	1.773	75.6	3041

Total flow period = 60 minutes. Peak flow period = 15 minutes.

Queue values in this table are 95% back of queue (feet).

Note: Basic Saturation Flows (in through car units) have been adjusted for grade, lane widths, parking manoeuvres and bus stops.

* Queue length exceeds short lane length due to specification of a percentile queue in the aaSIDRA Configuration File. For calculation of this statistic, you may specify the lane with full length.

d Short lane length on departure side.

r Delay, stops and queue length for this lane have been cut down to fit in the queuing space. The amount cut may not be accounted for fully in the adjacent lane performance statistics. You may wish to change the short lane to a full lane to investigate the extent of this effect.

Castillos de la Monta?as
Int. PR-3, PR-925 & Rampa PR-53; Hora Pico AM, Transito proyectado
Intersection ID: 5
Actuated Isolated Signals, Cycle Time = 158

Table S.15 - CAPACITY AND LEVEL OF SERVICE

Mov No.	Mov Typ	Green Ratio (g/C) 1st grn	Green Ratio (g/C) 2nd grn	Total Flow (veh /h)	Total Cap. (veh /h)	Deg. of Satn (v/c)	Aver. Delay (sec)	LOS
West: PR-3 West Approach								
12	L	0.133*		232	232	1.000	135.5	F
11	LT	0.329		1054E	1318<	0.799	59.4	E
13	R (Un2)	0.329*	0.500	171E	214<	0.800	50.9	D
				1457	1764	1.000	70.6	E
South: Ramp PR-53 South Approach								
32	L	0.304		488	618<	0.790	72.9	E
33	TR	0.304*		145	183<	0.790	71.0	E
				633	801	0.790	72.5	E
East: PR-3 East Approach								
22	L	0.133		235	235	1.000	135.1	F
21	LT	0.329		1633E	1836	0.890	71.0	E
23	R (Con)	1.000		249	1584	0.157	9.2	A#
				2117	3655	1.000	70.8	E
North: PR-925 North Approach								
42	L	0.133*		108	240	1.773*	451.9	F
43	TR (Un1)	0.133		213	213	1.000	88.4	F
				321	452	1.773	210.9	F
ALL VEHICLES:				4845	6673	1.773	75.6	E
INTERSECTION (persons):				5814	6673	1.773	75.6	

Level of Service calculations are based on
average control delay including geometric delay (HCM criteria),
independent of the current delay definition used.
For the criteria, refer to the "Level of Service" topic in the
aaSIDRA Output Guide or the Output section of the on-line help.

\# Level Of Service for continuous movements based on density
< Reduced capacity due to a short lane effect
* Maximum v/c ratio, or critical green periods
E "Excess" flow from the short lane of an adjacent movement

added to normal flow

Castillos de la Monta?as
Int. PR-3, PR-925 & Rampa PR-53; Hora Pico AM, Transito proyectado
Intersection ID: 5

Table S.23 - SENSITIVITY ANALYSIS RESULTS

Performance Measure	Smallest Value	Param Scale
Degree of Satn	1.711	115
Average Delay	75.1	105
Stop Rate	0.82	120
Max. Queue for Any Movement	61.7	50
Perf. Index	334.5	50
Cost total	1586.2	105

Performance Measure	Largest Value	Param Scale
Total Vehicle Cap.	6702	105
Prac. Spare Cap.	-47	115

Castillos de la Monta?as
Int. PR-3, PR-925 & Rampa PR-53; Hora Pico AM, Transito proyectado
Intersection ID: 5

Scaled sensitivity parameter: Maximum Green

Table V.23 - INTERSECTION SUMMARY FOR VARIABLE PARAMETER SCALE

Param Scale (%)	Cycle Time (sec)	Total Veh. Cap.	Intersn Deg. of Satn	Prac. Spare Cap.	Aver. Delay (sec)	Stop Rate	Longest Queue (veh)	Perf. Index	Cost Total $/h
50	86	6461	2.036	-56	78.8	0.98	61.7	334.5	1656.9
55	94	6500	2.041	-56	77.8	0.95	63.8	338.6	1639.1
60	100	6511	1.993	-55	77.0	0.94	64.1	342.7	1628.8
65	108	6539	2.006	-55	76.7	0.92	66.4	348.5	1620.8
70	114	6545	1.972	-54	76.6	0.91	67.0	354.0	1618.7
75	122	6564	1.989	-55	77.0	0.89	69.5	361.5	1619.9
80	127	6590	1.920	-53	75.8	0.88	68.3	363.5	1603.5
85	134	6627	1.900	-53	75.2	0.87	69.0	368.0	1593.3
90	140	6626	1.863	-52	75.7	0.86	69.0	374.8	1598.2
95	147	6657	1.849	-51	75.6	0.85	69.8	380.4	1595.2
100	152	6675	1.800	-50	75.3	0.85	69.1	384.2	1590.0
105	159	6702	1.790	-50	75.1	0.84	70.0	389.2	1586.2
110	165	6698	1.765	-49	75.9	0.83	70.2	396.4	1595.4
115	169	6686	1.711	-47	76.3	0.83	69.0	401.3	1600.3
120	174	6677	1.772	-49	76.8	0.82	74.5	404.9	1602.7

--- End of aaSIDRA Output ---

Akcelik & Associates Pty Ltd - aaSIDRA 2.0.0.205

FJRP
Francisco J. Reyes P Registered User No. 50310
Licence Type: Professional, Single Computer

Time and Date of Analysis 2:53 AM, Mar 23,2005

Filename: C:\Documents and Settings\Francisco\My Documents\Francisco\Humacao\Sea View\Sidra\CM1-3AMF.OUT

CASTILLOS DE LA MONTANA
Acceso principal: Hora Pico AM
Intersection ID: A1

aaTraffic SIDRA US Highway Capacity Manual (2000) Version

RUN INFORMATION
---

* Basic Parameters:
  Intersection Type: Unsignalised - Two-Way Stop Control
  Driving on the right-hand side of the road
  Input data specified in US units
  Default Values File No. 11
  Peak flow period (for performance): 15 minutes
  Unit time (for volumes): 60 minutes (Total Flow Period)
  Delay definition: Control delay
                Geometric delay included
  HCM Delay and Queue Models option selected
  Level of Service based on: Delay (HCM method)
  Queue definition: Back of queue, 95th Percentile

CASTILLOS DE LA MONTANA
Acceso principal: Hora Pico AM
Intersection ID: A1

DEFAULT PARAMETERS

Default values for some of the important general parameters:
(Default Values File: DEF11.SDF)

1. Basic saturation flow: 1900 tcu/h

   This value applies mainly to signalised intersections. For roundabouts and sign-controlled intersections, it is used for determining capacity of priority and continuous movements.

2. Through car equivalents for signalised intersections

	LEFT		THROUGH		RIGHT	
	LV	HV	LV	HV	LV	HV
Normal	1.053	2.000	1.000	2.000	1.176	2.000
Restricted	1.303	2.500			1.426	2.500

3. Opposed turn parameters (Two-Way Stop Control)

	Crit. Gap	Fol.up Hdway	Min. Deps	% Exit Flow Opposing
Left turns :	7.5	3.5	2.0	50
Through :	6.5	4.0	2.0	50
Right turns:	6.9	3.3	2.0	50
Opposed turns from priority road:				
	4.1	2.2	2.0	0

4. Cruise speed= 40 mi/h, Approach Distance= 1800 ft

5. Queue space per vehicle in feet
   Light vehicles: 25.0 Heavy vehicles: 45.0

A full list of input data defaults and ranges is given in the Input Guide part of aaSIDRA User Guide.

CASTILLOS DE LA MONTANA
Acceso principal: Hora Pico AM
Intersection ID: A1
Stop Sign Controlled Intersection

Table S.0 - TRAFFIC FLOW DATA

Mov No.	Left LV	Left HV	Through LV	Through HV	Right LV	Right HV	Flow Scale	Peak Flow Factor
VEHICLES Demand flows in veh/hour as used by the program								
West: Peoyecto West Approach								
12	67	0	0	0	0	0	1.00	0.90
13	0	0	0	0	264	0	1.00	0.90
South: PR-925 South Approach								
32	58	0	147	3	0	0	1.00	0.90
North: PR-925 North Approach								
42	0	0	212	3	0	0	1.00	0.90
43	0	0	0	0	14	0	1.00	0.90

Based on unit time = 60 minutes.
Flow Scale and Peak Hour Factor effects included in flow values.

CASTILLOS DE LA MONTANA
Acceso principal: Hora Pico AM
Intersection ID: A1
Stop Sign Controlled Intersection

Table S.2 - MOVEMENT CAPACITY PARAMETERS

Mov No.	Dem Flow (veh /h)	Total Opng Flow (veh/h)	%HV	Adjust. Opng Flow (pcu/h)	Total Cap. (veh /h)	Prac. Deg. Satn xp	Prac. Spare Cap. (%)	Lane Util (%)	Deg. Satn x
West: Peoyecto West Approach									
12 L	67	372+	1.6	372	565	0.80	575	100	0.119

13 R	264	222+	1.4	222	788	0.80	139	100	0.335*
South: PR-925 South Approach									
32 LT	208	215	1.4	215	1686	0.80	548	100	0.123
North: PR-925 North Approach									
42 T	215	0			1742	0.80	548	100	0.123
43 R	14	0			113	0.80	546	100	0.124

\+ Percentage of exiting flow included in total opposing flow

CASTILLOS DE LA MONTANA
Acceso principal: Hora Pico AM
Intersection ID: A1
Stop Sign Controlled Intersection

Table S.3 - INTERSECTION PARAMETERS

Intersection Level of Service	=	A
Worst movement Level of Service	=	B
Average intersection delay (s)	=	6.2
Largest average movement delay (s)	=	12.2
Largest back of queue, 95% (ft)	=	61
Performance Index	=	12.48
Degree of saturation (highest)	=	0.335
Practical Spare Capacity (lowest)	=	139 %
Total vehicle capacity, all lanes (veh/h)	=	4894
Total vehicle flow (veh/h)	=	768
Total person flow (pers/h)	=	922
Total vehicle delay (veh-h/h)	=	1.33
Total person delay (pers-h/h)	=	1.60
Total effective vehicle stops (veh/h)	=	341
Total effective person stops (pers/h)	=	410
Total vehicle travel (veh-mi/h)	=	319.1
Total cost ($/h)	=	126.38
Total fuel (ga/h)	=	13.9
Total CO2 (kg/h)	=	131.30

CASTILLOS DE LA MONTANA
Acceso principal: Hora Pico AM
Intersection ID: A1
Stop Sign Controlled Intersection

Table S.8 - LANE FLOW AND CAPACITY INFORMATION

Lan No.	Mov No.	Dem Flow (veh/h) Lef	Thru	Rig	Tot	Min Cap (veh /h)	Tot Cap (veh /h)	Deg. Satn x	Lane Util %
West: Peoyecto West Approach									
1 L	12	67	0	0	67	67	565	0.119	100
2 R	13	0	0	264	264	120	788	0.335	100
South: PR-925 South Approach									
1 LT	32	58	150	0	208	208	1686	0.123	100

North: PR-925 North Approach									
1 TR	42, 43	0	215	14	229	229	1856	0.123	100

The capacity value for priority and continuous movements is obtained by adjusting the basic saturation flow for heavy vehicle and turning vehicle effects. Saturation flow scale applies if specified.

CASTILLOS DE LA MONTANA
Acceso principal: Hora Pico AM
Intersection ID: A1
Stop Sign Controlled Intersection

Table S.10 - MOVEMENT CAPACITY AND PERFORMANCE SUMMARY

Mov No.	Mov Typ	Dem Flow (veh /h)	Total Cap. (veh /h)	Lane Util (%)	Deg. Satn x	Aver. Delay (sec)	Eff. Stop Rate	95% Back of Queue (veh)	Perf. Index
West: Peoyecto West Approach									
12	L	67	565	100	0.119	12.2	0.91	0.7	1.49
13	R	264	788	100	0.335*	11.9	0.88	2.4	5.66
South: PR-925 South Approach									
32	LT	208	1686	100	0.123	3.4	0.19	0.9	2.85
North: PR-925 North Approach									
42	T	215	1742	100	0.123	0.0	0.00	0.0	2.24
43	R	14	113	100	0.124	9.6	0.72	0.0	0.24

* Maximum degree of saturation

CASTILLOS DE LA MONTANA
Acceso principal: Hora Pico AM
Intersection ID: A1
Stop Sign Controlled Intersection

Table S.14 - SUMMARY OF INPUT AND OUTPUT DATA

Lane No.	Demand Flow (veh/h) L	T	R	Tot	%HV	Adj. Basic Satf.	Eff Grn (secs) 1st	2nd	Deg Sat x	Aver. Delay (sec)	Longest Queue (ft)	Shrt Lane (ft)
West: Peoyecto West Approach												
1 L	67			67	0				0.119	12.2	18	
2 R			264	264	0				0.335	11.9	61	160
	67	0	264	331	0				0.335	11.9	61	
South: PR-925 South Approach												
1 LT	58	150		208	1				0.123	3.4	22	

	58	150	0	208	1	0.123	3.4	22
North: PR-925 North Approach								
1 TR		215	14	229	1	0.123	0.6	0
	0	215	14	229	1	0.123	0.6	

ALL VEHICLES	Total Flow	% HV	Max X	Aver. Delay	Max Queue
	768	1	0.335	6.2	61

Total flow period = 60 minutes. Peak flow period = 15 minutes.

Queue values in this table are 95% back of queue (feet).

Note: Basic Saturation Flows are not adjusted at roundabouts or sign-controlled intersections and apply only to continuous lanes.

CASTILLOS DE LA MONTANA
Acceso principal: Hora Pico AM
Intersection ID: A1
Stop Sign Controlled Intersection

Table S.15 - CAPACITY AND LEVEL OF SERVICE

Mov No.	Mov Typ	Total Flow (veh /h)	Total Cap. (veh /h)	Deg. of Satn (v/c)	Aver. Delay (sec)	LOS
West: Peoyecto West Approach						
12	L	67	565	0.119	12.2	B
13	R	264	788	0.335*	11.9	B
		331	1353	0.335	11.9	B
South: PR-925 South Approach						
32	LT	208	1686	0.123	3.4	A
		208	1686	0.123	3.4	A
North: PR-925 North Approach						
42	T	215	1742	0.123	0.0	A
43	R	14	113	0.124	9.6	A
		229	1855	0.124	0.6	A
ALL VEHICLES:		768	4894	0.335	6.2	A

Level of Service calculations are based on average control delay including geometric delay (HCM criteria), independent of the current delay definition used.
For the criteria, refer to the "Level of Service" topic in the aaSIDRA Output Guide or the Output section of the on-line help.
* Maximum v/c ratio, or critical green periods

--- End of aaSIDRA Output ---

Akcelik & Associates Pty Ltd - aaSIDRA 2.0.0.205

FJRP
Francisco J. Reyes P Registered User No. 50310
Licence Type: Professional, Single Computer

Time and Date of Analysis 3:16 AM, Mar 23,2005

Filename: C:\Documents and Settings\Francisco\My Documents\Francisco\Humacao\Sea View\Sidra\CM2-3AMF.OUT

CASTILLOS DE LA MONTANA
Acceso secundaria: Hora Pico AM
Intersection ID: A2

aaTraffic SIDRA US Highway Capacity Manual (2000) Version

RUN INFORMATION

* Basic Parameters:
  Intersection Type: Unsignalised - Two-Way Stop Control
  Driving on the right-hand side of the road
  Input data specified in US units
  Default Values File No. 11
  Peak flow period (for performance): 15 minutes
  Unit time (for volumes): 60 minutes (Total Flow Period)
  Delay definition: Control delay
                    Geometric delay included
  HCM Delay and Queue Models option selected
  Level of Service based on: Delay (HCM method)
  Queue definition: Back of queue, 95th Percentile

CASTILLOS DE LA MONTANA
Acceso secundaria: Hora Pico AM
Intersection ID: A2

DEFAULT PARAMETERS

Default values for some of the important general parameters:
(Default Values File: DEF11.SDF)

1. Basic saturation flow: 1900 tcu/h

   This value applies mainly to signalised intersections. For roundabouts and sign-controlled intersections, it is used for determining capacity of priority and continuous movements.

2. Through car equivalents for signalised intersections

	LEFT		THROUGH		RIGHT	
	LV	HV	LV	HV	LV	HV
Normal	1.053	2.000	1.000	2.000	1.176	2.000
Restricted	1.303	2.500			1.426	2.500

3. Opposed turn parameters (Two-Way Stop Control)

	Crit. Gap	Fol.up Hdway	Min. Deps	% Exit Flow Opposing
Left turns :	7.5	3.5	2.0	50
Through :	6.5	4.0	2.0	50
Right turns:	6.9	3.3	2.0	50
Opposed turns from priority road:	4.1	2.2	2.0	0

4. Cruise speed= 40 mi/h, Approach Distance= 1800 ft

5. Queue space per vehicle in feet
   Light vehicles: 25.0 Heavy vehicles: 45.0

A full list of input data defaults and ranges is given in the Input Guide part of aaSIDRA User Guide.

CASTILLOS DE LA MONTANA
Acceso secundaria: Hora Pico AM
Intersection ID: A2
Stop Sign Controlled Intersection

Table S.0 - TRAFFIC FLOW DATA

Mov No.	Left LV	Left HV	Through LV	Through HV	Right LV	Right HV	Flow Scale	Peak Flow Factor
VEHICLES Demand flows in veh/hour as used by the program								
South: PR-925 South Approach								
32	0	0	104	1	0	0	1.00	0.92
33	0	0	0	0	24	0	1.00	0.90
East: Proyecto East Approach								
22	132	0	0	0	0	0	1.00	0.90
23	0	0	0	0	33	0	1.00	0.90
North: PR-925 North Approach								
42	7	0	73	1	0	0	1.00	0.90

Based on unit time = 60 minutes.
Flow Scale and Peak Hour Factor effects included in flow values.

CASTILLOS DE LA MONTANA
Acceso secundaria: Hora Pico AM
Intersection ID: A2
Stop Sign Controlled Intersection

Table S.2 - MOVEMENT CAPACITY PARAMETERS

Mov No.	Dem Flow (veh /h)	Total Opng Flow (veh/h)	%HV	Adjust. Opng Flow (pcu/h)	Total Cap. (veh /h)	Prac. Deg. Satn xp	Prac. Spare Cap. (%)	Lane Util (%)	Deg. Satn x
South: PR-925 South Approach									
32 T	105	0			1486	0.80	1032	100	0.071

33 R	24	0			340	0.80	1033	100	0.071
East: Proyecto East Approach									
22 L	132	191+	1.0	191	628	0.80	281	100	0.210*
23 R	33	117+	0.9	117	157	0.80	281	100	0.210*
North: PR-925 North Approach									
42 LT	81	105	1.0	105	1835	0.80	1712	100	0.044

\+ Percentage of exiting flow included in total opposing flow

---

CASTILLOS DE LA MONTANA
Acceso secundaria: Hora Pico AM
Intersection ID: A2
Stop Sign Controlled Intersection

Table S.3 - INTERSECTION PARAMETERS

Intersection Level of Service	=	A
Worst movement Level of Service	=	B
Average intersection delay (s)	=	5.6
Largest average movement delay (s)	=	10.8
Largest back of queue, 95% (ft)	=	36
Performance Index	=	5.93
Degree of saturation (highest)	=	0.210
Practical Spare Capacity (lowest)	=	281 %
Total vehicle capacity, all lanes (veh/h)	=	4445
Total vehicle flow (veh/h)	=	375
Total person flow (pers/h)	=	450
Total vehicle delay (veh-h/h)	=	0.58
Total person delay (pers-h/h)	=	0.70
Total effective vehicle stops (veh/h)	=	163
Total effective person stops (pers/h)	=	196
Total vehicle travel (veh-mi/h)	=	155.7
Total cost ($/h)	=	60.94
Total fuel (ga/h)	=	6.7
Total CO2 (kg/h)	=	62.96

CASTILLOS DE LA MONTANA
Acceso secundaria: Hora Pico AM
Intersection ID: A2
Stop Sign Controlled Intersection

Table S.8 - LANE FLOW AND CAPACITY INFORMATION

Lan No.	Mov No.	Dem Flow (veh/h) Lef	Thru	Rig	Tot	Min Cap (veh /h)	Tot Cap (veh /h)	Deg. Satn x	Lane Util %
South: PR-925 South Approach									
1 TR	32, 33	0	105	24	129	129	1826	0.071	100
East: Proyecto East Approach									
1 LR	22,	132	0	33	165	120	785	0.210	100

North: PR-925 North Approach									
1 LT	42	7	74	0	81	81	1835	0.044	100

The capacity value for priority and continuous movements is obtained by adjusting the basic saturation flow for heavy vehicle and turning vehicle effects. Saturation flow scale applies if specified.

CASTILLOS DE LA MONTANA
Acceso secundaria: Hora Pico AM
Intersection ID: A2
Stop Sign Controlled Intersection

Table S.10 - MOVEMENT CAPACITY AND PERFORMANCE SUMMARY

Mov No.	Mov Typ	Dem Flow (veh /h)	Total Cap. (veh /h)	Lane Util (%)	Deg. Satn x	Aver. Delay (sec)	Eff. Stop Rate	95% Back of Queue (veh)	Perf. Index
South: PR-925 South Approach									
32	T	105	1486	100	0.071	0.0	0.00	0.0	1.10
33	R	24	340	100	0.071	9.6	0.72	0.0	0.41
East: Proyecto East Approach									
22	L	132	628	100	0.210*	10.8	0.87	1.4	2.76
23	R	33	157	100	0.210*	10.8	0.81	1.4	0.68
North: PR-925 North Approach									
42	LT	81	1835	100	0.044	1.1	0.06	0.3	0.99

* Maximum degree of saturation

CASTILLOS DE LA MONTANA
Acceso secundaria: Hora Pico AM
Intersection ID: A2
Stop Sign Controlled Intersection

Table S.14 - SUMMARY OF INPUT AND OUTPUT DATA

Lane No.	Demand Flow (veh/h) L	T	R	Tot	%HV	Adj. Basic Satf.	Eff Grn (secs) 1st	2nd	Deg Sat x	Aver. Delay (sec)	Longest Queue (ft)	Shrt Lane (ft)
South: PR-925 South Approach												
1 TR		105	24	129	1				0.071	1.8	0	
	0	105	24	129	1				0.071	1.8		
East: Proyecto East Approach												
1 LR	132		33	165	0				0.210	10.8	36	
	132	0	33	165	0				0.210	10.8	36	

North: PR-925 North Approach								
1 LT	7	74		81	1	0.044	1.1	7
	7	74	0	81	1	0.044	1.1	7

ALL VEHICLES	Total Flow	% HV	Max X	Aver. Delay	Max Queue
	375	1	0.210	5.6	36

Total flow period = 60 minutes. Peak flow period = 15 minutes.

Queue values in this table are 95% back of queue (feet).

Note: Basic Saturation Flows are not adjusted at roundabouts or sign-controlled intersections and apply only to continuous lanes.

CASTILLOS DE LA MONTANA
Acceso secundaria: Hora Pico AM
Intersection ID: A2
Stop Sign Controlled Intersection

Table S.15 - CAPACITY AND LEVEL OF SERVICE

Mov No.	Mov Typ	Total Flow (veh /h)	Total Cap. (veh /h)	Deg. of Satn (v/c)	Aver. Delay (sec)	LOS
South: PR-925 South Approach						
32	T	105	1486	0.071	0.0	A
33	R	24	340	0.071	9.6	A
		129	1826	0.071	1.8	A
East: Proyecto East Approach						
22	L	132	628	0.210*	10.8	B
23	R	33	157	0.210*	10.8	B
		165	785	0.210	10.8	B
North: PR-925 North Approach						
42	LT	81	1835	0.044	1.1	A
		81	1835	0.044	1.1	A
ALL VEHICLES:		375	4445	0.210	5.6	A

Level of Service calculations are based on average control delay including geometric delay (HCM criteria), independent of the current delay definition used.
For the criteria, refer to the "Level of Service" topic in the aaSIDRA Output Guide or the Output section of the on-line help.
* Maximum v/c ratio, or critical green periods

--- End of aaSIDRA Output ---

Akcelik & Associates Pty Ltd - aaSIDRA 2.0.0.205

FJRP
Francisco J. Reyes P Registered User No. 50310
Licence Type: Professional, Single Computer

Time and Date of Analysis 3:24 AM, Mar 23,2005

Filename: C:\Documents and Settings\Francisco\My Documents\Francisco\Humacao\Sea View\Sidra\925-3PMF.OUT

Castillos de la Monta?a
Intersecci?n PR-925 & PR-3; Hora Pico PM, Transito proyectado
Intersection ID: 1

aaTraffic SIDRA US Highway Capacity Manual (2000) Version

RUN INFORMATION
---

* Basic Parameters:
  Intersection Type: Unsignalised - Two-Way Stop Control
  Driving on the right-hand side of the road
  Input data specified in US units
  Default Values File No. 11
  Peak flow period (for performance): 15 minutes
  Unit time (for volumes): 60 minutes (Total Flow Period)
  Delay definition: Control delay
                Geometric delay included
  HCM Delay and Queue Models option selected
  Level of Service based on: Delay (HCM method)
  Queue definition: Back of queue, 95th Percentile

Castillos de la Monta?a
Intersecci?n PR-925 & PR-3; Hora Pico PM, Transito proyectado
Intersection ID: 1

DEFAULT PARAMETERS

Default values for some of the important general parameters:
(Default Values File: DEF11.SDF)

1. Basic saturation flow: 1900 tcu/h

   This value applies mainly to signalised intersections. For roundabouts and sign-controlled intersections, it is used for determining capacity of priority and continuous movements.

2. Through car equivalents for signalised intersections

	LEFT		THROUGH		RIGHT	
	LV	HV	LV	HV	LV	HV
Normal	1.053	2.000	1.000	2.000	1.176	2.000
Restricted	1.303	2.500			1.426	2.500

3. Opposed turn parameters (Two-Way Stop Control)

	Crit. Gap	Fol.up Hdway	Min. Deps	% Exit Flow Opposing
Left turns :	7.5	3.5	2.0	50
Through :	6.5	4.0	2.0	50
Right turns:	6.9	3.3	2.0	50
Opposed turns from priority road:	4.1	2.2	2.0	0

4. Cruise speed= 40 mi/h, Approach Distance= 1800 ft

5. Queue space per vehicle in feet
   Light vehicles: 25.0 Heavy vehicles: 45.0

A full list of input data defaults and ranges is given in the Input Guide part of aaSIDRA User Guide.

Castillos de la Monta?a
Intersecci?n PR-925 & PR-3; Hora Pico PM, Transito proyectado
Intersection ID: 1
Stop Sign Controlled Intersection

Table S.0 - TRAFFIC FLOW DATA

Mov No.	Left LV	Left HV	Through LV	Through HV	Right LV	Right HV	Flow Scale	Peak Flow Factor
VEHICLES Demand flows in veh/hour as used by the program								
West: PR-3 West Approach								
12	224	0	613	9	0	0	1.00	0.96
East: PR-3 East Approach								
22	0	0	467	10	0	0	1.00	0.96
23	0	0	0	0	108	0	1.00	0.96
North: PR-925 North Approach								
42	63	0	0	0	0	0	1.00	0.96
43	0	0	0	0	122	0	1.00	0.96

Based on unit time = 60 minutes.
Flow Scale and Peak Hour Factor effects included in flow values.

Castillos de la Monta?a
Intersecci?n PR-925 & PR-3; Hora Pico PM, Transito proyectado
Intersection ID: 1
Stop Sign Controlled Intersection

Table S.2 - MOVEMENT CAPACITY PARAMETERS

Mov No.	Dem Flow (veh /h)	Total Opng Flow (veh/h)	%HV	Adjust. Opng Flow (pcu/h)	Total Cap. (veh /h)	Prac. Deg. Satn xp	Prac. Spare Cap. (%)	Lane Util (%)	Deg. Satn x
West: PR-3 West Approach									
12 LT	846	477	2.1	477	2547	0.80	141	65	0.332*

East: PR-3 East Approach										
22	T	477	0			1476	0.80	148	100	0.323
23	R	108	0			334	0.80	147	100	0.323
North: PR-925 North Approach										
42	L	63	531+	1.9	531	436	0.80	454	100	0.144
43	R	122	531+	1.9	531	498	0.80	227	100	0.245

\+ Percentage of exiting flow included in total opposing flow

Castillos de la Monta?a
Intersecci?n PR-925 & PR-3; Hora Pico PM, Transito proyectado
Intersection ID: 1
Stop Sign Controlled Intersection

Table S.3 - INTERSECTION PARAMETERS

Intersection Level of Service	=	A
Worst movement Level of Service	=	B
Average intersection delay (s)	=	3.9
Largest average movement delay (s)	=	14.7
Largest back of queue, 95% (ft)	=	41
Performance Index	=	22.21
Degree of saturation (highest)	=	0.332
Practical Spare Capacity (lowest)	=	141 %
Total vehicle capacity, all lanes (veh/h)	=	5656
Total vehicle flow (veh/h)	=	1616
Total person flow (pers/h)	=	1939
Total vehicle delay (veh-h/h)	=	1.77
Total person delay (pers-h/h)	=	2.12
Total effective vehicle stops (veh/h)	=	439
Total effective person stops (pers/h)	=	527
Total vehicle travel (veh-mi/h)	=	672.5
Total cost ($/h)	=	238.85
Total fuel (ga/h)	=	25.5
Total CO2 (kg/h)	=	241.47

Castillos de la Monta?a
Intersecci?n PR-925 & PR-3; Hora Pico PM, Transito proyectado
Intersection ID: 1
Stop Sign Controlled Intersection

Table S.8 - LANE FLOW AND CAPACITY INFORMATION

Lan No.	Mov No.	Dem Flow (veh/h) Lef	Thru	Rig	Tot	Min Cap (veh /h)	Tot Cap (veh /h)	Deg. Satn x	Lane Util %
West: PR-3 West Approach									
1 L	12	224	0	0	224	120	1040	0.215	65P
2 T	12	0	622	0	622	622	1873	0.332	100
East: PR-3 East Approach									

1 TR	22, 23	0	477	108	585	585	1810	0.323	100

North: PR-925 North Approach

1 L	42	63	0	0	63	63	436	0.145	100
2 R	43	0	0	122	122	120	498	0.245	100

P Lane under-utilisation found by the "Program"

The capacity value for priority and continuous movements is obtained by adjusting the basic saturation flow for heavy vehicle and turning vehicle effects. Saturation flow scale applies if specified.

Castillos de la Monta?a
Intersecci?n PR-925 & PR-3; Hora Pico PM, Transito proyectado
Intersection ID: 1
Stop Sign Controlled Intersection

Table S.10 - MOVEMENT CAPACITY AND PERFORMANCE SUMMARY

Mov No.	Mov Typ	Dem Flow (veh /h)	Total Cap. (veh /h)	Lane Util (%)	Deg. Satn x	Aver. Delay (sec)	Eff. Stop Rate	95% Back of Queue (veh)	Perf. Index
West: PR-3 West Approach									
12	LT	846	2547	65	0.332*	3.1	0.21	1.2	10.89
East: PR-3 East Approach									
22	T	477	1476	100	0.323	0.0	0.00	0.0	4.98
23	R	108	334	100	0.323	9.6	0.72	0.0	1.83
North: PR-925 North Approach									
42	L	63	436	100	0.144	14.7	0.99	0.9	1.55
43	R	122	498	100	0.245	14.6	1.01	1.6	2.96

* Maximum degree of saturation

Castillos de la Monta?a
Intersecci?n PR-925 & PR-3; Hora Pico PM, Transito proyectado
Intersection ID: 1
Stop Sign Controlled Intersection

Table S.14 - SUMMARY OF INPUT AND OUTPUT DATA

Lane No.	Demand Flow (veh/h) L	T	R	Tot	%HV	Adj. Basic Satf.	Eff Grn (secs) 1st	2nd	Deg Sat x	Aver. Delay (sec)	Longest Queue (ft)	Shrt Lane (ft)
West: PR-3 West Approach												
1 L	224			224	0				0.215	11.7	30	160
2 T		622		622	1				0.332	0.0	0	
	224	622	0	846	1				0.332	3.1	30	

East: PR-3 East Approach

1 TR		477	108	585	2	0.323	1.8	0
	0	477	108	585	2	0.323	1.8	
North: PR-925 North Approach								
1 L	63			63	0	0.145	14.7	23
2 R			122	122	0	0.245	14.6	41
	63	0	122	185	0	0.245	14.6	41

ALL VEHICLES	Total Flow	% HV	Max X	Aver. Delay	Max Queue
	1616	1	0.332	3.9	41

Total flow period = 60 minutes. Peak flow period = 15 minutes.

Queue values in this table are 95% back of queue (feet).

Note: Basic Saturation Flows are not adjusted at roundabouts or sign-controlled intersections and apply only to continuous lanes.

Castillos de la Monta?a
Intersecci?n PR-925 & PR-3; Hora Pico PM, Transito proyectado
Intersection ID: 1
Stop Sign Controlled Intersection

Table S.15 - CAPACITY AND LEVEL OF SERVICE

Mov No.	Mov Typ	Total Flow (veh /h)	Total Cap. (veh /h)	Deg. of Satn (v/c)	Aver. Delay (sec)	LOS
West: PR-3 West Approach						
12	LT	846	2547	0.332*	3.1	A
		846	2547	0.332	3.1	A
East: PR-3 East Approach						
22	T	477	1476	0.323	0.0	A
23	R	108	334	0.323	9.6	A
		585	1810	0.323	1.8	A
North: PR-925 North Approach						
42	L	63	436	0.144	14.7	B
43	R	122	498	0.245	14.6	B
		185	934	0.245	14.6	B
ALL VEHICLES:		1616	5656	0.332	3.9	A

Level of Service calculations are based on average control delay including geometric delay (HCM criteria), independent of the current delay definition used.
For the criteria, refer to the "Level of Service" topic in the aaSIDRA Output Guide or the Output section of the on-line help.
* Maximum v/c ratio, or critical green periods

--- End of aaSIDRA Output ---

Akcelik & Associates Pty Ltd - aaSIDRA 2.0.0.205

FJRP
Francisco J. Reyes P Registered User No. 50310
Licence Type: Professional, Single Computer

Time and Date of Analysis 12:59 AM, Mar 23,2005

Filename: C:\Documents and Settings\Francisco\My Documents\Francisco\Humacao\Sea View\Sidra\CC-3PMF.OUT

Castillos de la Monta?a
Int. PR-3 & acceso Ciudad Cristiana; Hora Pico PM, Transito proyectado
Intersection ID: 2

aaTraffic SIDRA US Highway Capacity Manual (2000) Version

RUN INFORMATION

* Basic Parameters:
  Intersection Type: Unsignalised - Two-Way Stop Control
  Driving on the right-hand side of the road
  Input data specified in US units
  Default Values File No. 11
  Peak flow period (for performance): 15 minutes
  Unit time (for volumes): 60 minutes (Total Flow Period)
  Delay definition: Control delay
                    Geometric delay included
  HCM Delay and Queue Models option selected
  Level of Service based on: Delay (HCM method)
  Queue definition: Back of queue, 95th Percentile

Castillos de la Monta?a
Int. PR-3 & acceso Ciudad Cristiana; Hora Pico PM, Transito proyectado
Intersection ID: 2

DEFAULT PARAMETERS

Default values for some of the important general parameters:
(Default Values File: DEF11.SDF)

1. Basic saturation flow: 1900 tcu/h

   This value applies mainly to signalised intersections. For roundabouts and sign-controlled intersections, it is used for determining capacity of priority and continuous movements.

2. Through car equivalents for signalised intersections

	LEFT		THROUGH		RIGHT	
	LV	HV	LV	HV	LV	HV
Normal	1.053	2.000	1.000	2.000	1.176	2.000
Restricted	1.303	2.500			1.426	2.500

3. Opposed turn parameters (Two-Way Stop Control)

	Crit. Gap	Fol.up Hdway	Min. Deps	% Exit Flow Opposing
Left turns :	7.5	3.5	2.0	50
Through :	6.5	4.0	2.0	50
Right turns:	6.9	3.3	2.0	50
Opposed turns from priority road:				
	4.1	2.2	2.0	0

4. Cruise speed= 40 mi/h, Approach Distance= 1800 ft

5. Queue space per vehicle in feet
   Light vehicles: 25.0 Heavy vehicles: 45.0

A full list of input data defaults and ranges is given in the Input Guide part of aaSIDRA User Guide.

Castillos de la Monta?a
Int. PR-3 & acceso Ciudad Cristiana; Hora Pico PM, Transito proyectado
Intersection ID: 2

Stop Sign Controlled Intersection

Table S.0 - TRAFFIC FLOW DATA

Mov No.	Left LV	Left HV	Through LV	Through HV	Right LV	Right HV	Flow Scale	Peak Flow Factor
VEHICLES Demand flows in veh/hour as used by the program								
West: PR-3 West Approach								
12	0	0	880	21	0	0	1.00	0.92
13	0	0	0	0	143	1	1.00	0.92
South: CC South Approach								
32	76	1	0	0	0	0	1.00	0.92
33	0	0	0	0	16	0	1.00	0.92
East: PR-3 East Approach								
22	40	2	742	23	0	0	1.00	0.92

Based on unit time = 60 minutes.
Flow Scale and Peak Hour Factor effects included in flow values.

Castillos de la Monta?a
Int. PR-3 & acceso Ciudad Cristiana; Hora Pico PM, Transito proyectado
Intersection ID: 2
Stop Sign Controlled Intersection

Table S.2 - MOVEMENT CAPACITY PARAMETERS

Mov No.	Dem Flow (veh /h)	Total Opng Flow (veh/h)	%HV	Adjust. Opng Flow (pcu/h)	Total Cap. (veh /h)	Prac. Deg. Satn xp	Prac. Spare Cap. (%)	Lane Util (%)	Deg. Satn x

West: PR-3 West Approach										
12	T	901	0			1567	0.80	39	100	0.575
13	R	144	0			250	0.80	39	100	0.576
South: CC South Approach										
32	L	77	1738+	2.6	1738	77	0.80	-20	100	1.000*
33	R	16	973+	2.2	973	255	0.80	1175	100	0.063
East: PR-3 East Approach										
22	LT	807	901	2.3	901	1665	0.80	65	100	0.485

\+ Percentage of exiting flow included in total opposing flow

Castillos de la Monta?a
Int. PR-3 & acceso Ciudad Cristiana; Hora Pico PM, Transito proyectado
Intersection ID: 2
Stop Sign Controlled Intersection

Table S.3 - INTERSECTION PARAMETERS

Intersection Level of Service	=	B
Worst movement Level of Service	=	F
Average intersection delay (s)	=	13.7
Largest average movement delay (s)	=	196.8
Largest back of queue, 95% (ft)	=	352
Performance Index	=	37.68
Degree of saturation (highest)	=	1.000
Practical Spare Capacity (lowest)	=	-20 %
Total vehicle capacity, all lanes (veh/h)	=	3816
Total vehicle flow (veh/h)	=	1945
Total person flow (pers/h)	=	2334
Total vehicle delay (veh-h/h)	=	7.41
Total person delay (pers-h/h)	=	8.90
Total effective vehicle stops (veh/h)	=	261
Total effective person stops (pers/h)	=	313
Total vehicle travel (veh-mi/h)	=	810.7
Total cost ($/h)	=	332.72
Total fuel (ga/h)	=	36.4
Total CO2 (kg/h)	=	345.01

Castillos de la Monta?a
Int. PR-3 & acceso Ciudad Cristiana; Hora Pico PM, Transito proyectado
Intersection ID: 2
Stop Sign Controlled Intersection

Table S.8 - LANE FLOW AND CAPACITY INFORMATION

Lan No.	Mov No.	Dem Flow (veh/h) Lef	Thru	Rig	Tot	Min Cap (veh /h)	Tot Cap (veh /h)	Deg. Satn x	Lane Util %
West: PR-3 West Approach									
1 TR	12, 13	0	901	144	1045	1045	1818	0.575	100

South: CC South Approach									
1 L	32	77	0	0	77	77	77	1.000	100
2 R	33	0	0	16	16	16	255	0.063	100
East: PR-3 East Approach									
1 LT	22	42	765	0	807	807	1665	0.485	100

The capacity value for priority and continuous movements is obtained by adjusting the basic saturation flow for heavy vehicle and turning vehicle effects. Saturation flow scale applies if specified.

Castillos de la Monta?a
Int. PR-3 & acceso Ciudad Cristiana; Hora Pico PM, Transito proyectado
Intersection ID: 2
Stop Sign Controlled Intersection

Table S.10 - MOVEMENT CAPACITY AND PERFORMANCE SUMMARY

Mov No.	Mov Typ	Dem Flow (veh /h)	Total Cap. (veh /h)	Lane Util (%)	Deg. Satn x	Aver. Delay (sec)	Eff. Stop Rate	95% Back of Queue (veh)	Perf. Index
West: PR-3 West Approach									
12	T	901	1567	100	0.575	0.0	0.00	0.0	9.40
13	R	144	250	100	0.576	9.6	0.72	0.0	2.45
South: CC South Approach									
32	L	77	77	100	1.000*	196.8	1.21	13.9	10.36
33	R	16	255	100	0.063	20.0	1.00	0.5	0.49
East: PR-3 East Approach									
22	LT	807	1665	100	0.485	12.2	0.06	10.5	14.98

* Maximum degree of saturation

Castillos de la Monta?a
Int. PR-3 & acceso Ciudad Cristiana; Hora Pico PM, Transito proyectado
Intersection ID: 2
Stop Sign Controlled Intersection

Table S.14 - SUMMARY OF INPUT AND OUTPUT DATA

Lane No.	Demand Flow (veh/h) L	T	R	Tot	%HV	Adj. Basic Satf.	Eff Grn (secs) 1st	2nd	Deg Sat x	Aver. Delay (sec)	Longest Queue (ft)	Shrt Lane (ft)
West: PR-3 West Approach												
1 TR		901	144	1045	2				0.575	1.3	0	
	0	901	144	1045	2				0.575	1.3		

South: CC South Approach									
1 L	77			77	1		1.000	196.8	352
2 R			16	16	0		0.063	20.0	12
	77	0	16	93	1		1.000	166.4	352
East: PR-3 East Approach									
1 LT	42	765		807	3		0.485	12.2	269
	42	765	0	807	3		0.485	12.2	269
ALL VEHICLES				Total Flow 1945	% HV 2		Max X 1.000	Aver. Delay 13.7	Max Queue 352

Total flow period = 60 minutes. Peak flow period = 15 minutes.

Queue values in this table are 95% back of queue (feet).

Note: Basic Saturation Flows are not adjusted at roundabouts or sign-controlled intersections and apply only to continuous lanes.

Castillos de la Monta?a
Int. PR-3 & acceso Ciudad Cristiana; Hora Pico PM, Transito proyectado
Intersection ID: 2
Stop Sign Controlled Intersection

Table S.15 - CAPACITY AND LEVEL OF SERVICE

Mov No.	Mov Typ	Total Flow (veh /h)	Total Cap. (veh /h)	Deg. of Satn (v/c)	Aver. Delay (sec)	LOS
West: PR-3 West Approach						
12	T	901	1567	0.575	0.0	A
13	R	144	250	0.576	9.6	A
		1045	1817	0.576	1.3	A
South: CC South Approach						
32	L	77	77	1.000*	196.8	F
33	R	16	255	0.063	20.0	C
		93	332	1.000	166.4	F
East: PR-3 East Approach						
22	LT	807	1665	0.485	12.2	B
		807	1665	0.485	12.2	B
ALL VEHICLES:		1945	3816	1.000	13.7	B

Level of Service calculations are based on average control delay including geometric delay (HCM criteria), independent of the current delay definition used.
For the criteria, refer to the "Level of Service" topic in the aaSIDRA Output Guide or the Output section of the on-line help.

* Maximum v/c ratio, or critical green periods

--- End of aaSIDRA Output ---

Akcelik & Associates Pty Ltd - aaSIDRA 2.0.0.205

FJRP
Francisco J. Reyes P Registered User No. 50310
Licence Type: Professional, Single Computer

Time and Date of Analysis 2:35 AM, Mar 23,2005

Filename: C:\Documents and Settings\Francisco\My Documents\Francisco\Humacao\Sea View\Sidra\Com-3PMF.OUT

Castillos de la Monta?a
Int. PR-3 & Acceso a Centro Comercial; Hora Pico PM, Transito proyectado
Intersection ID: 3

aaTraffic SIDRA US Highway Capacity Manual (2000) Version

RUN INFORMATION

Parameter sensitivity run: "Optimum" Maximum Green = 75.0 %

* Basic Parameters:
Intersection Type: Signalised - Actuated Isolated
For fully-actuated signal timings, the following specifications will be ignored:
Any maximum cycle time specification
Any user-given cycle time (unless phase times also given)
User-given cycle and phase times (if variable flow scale run)
Any variable cycle time specification
Any green split priority specification
Driving on the right-hand side of the road
Input data specified in US units
Default Values File No. 11
Peak flow period (for performance): 15 minutes
Unit time (for volumes): 60 minutes (Total Flow Period)
Delay definition: Control delay
Geometric delay included
HCM Delay and Queue Models option selected
Level of Service based on: Delay (HCM method)
Queue definition: Back of queue, 95th Percentile

* No. of Main (Timing-Capacity) Iterations = 5
Comparison of last two iterations:
Difference in intersection degree of satn = 0.0 %
Difference in total vehicle capacity = 0.0 %
Largest difference in eff. green times = 0 secs
(max. value for stopping = 1 secs)

* Movement 12 has large x because of short lanes.
The degree of saturation of adjacent movement 11 is less than xp,
hence this solution may be satisfactory.
See Table S.7 for queue length, delay etc.

Castillos de la Monta?a

Int. PR-3 & Acceso a Centro Comercial; Hora Pico PM, Transito proyectado
Intersection ID: 3

DEFAULT PARAMETERS

Default values for some of the important general parameters:
(Default Values File: DEF11.SDF)

1. Basic saturation flow: 1900 tcu/h

   This value applies mainly to signalised intersections. For roundabouts and sign-controlled intersections, it is used for determining capacity of priority and continuous movements.

2. Through car equivalents for signalised intersections

	LEFT		THROUGH		RIGHT	
	LV	HV	LV	HV	LV	HV
Normal	1.053	2.000	1.000	2.000	1.176	2.000
Restricted	1.303	2.500			1.426	2.500

3. Opposed turn parameters (Signalised intersection)

	Crit. Gap	Fol.up Hdway	Deps at End	% Exit Flow Opposing
Left turns :	4.5	2.5	2.0	0
Right turns:	4.0	2.4	2.5	0

4. Cruise speed= 40 mi/h, Approach Distance= 1800 ft

5. Queue space per vehicle in feet
   Light vehicles: 25.0 Heavy vehicles: 45.0

A full list of input data defaults and ranges is given in the Input Guide part of aaSIDRA User Guide.

Castillos de la Monta?a
Int. PR-3 & Acceso a Centro Comercial; Hora Pico PM, Transito proyectado
Intersection ID: 3
Actuated Isolated Signals, Cycle Time = 57

Table S.0 - TRAFFIC FLOW DATA

Mov No.	Left LV	Left HV	Through LV	Through HV	Right LV	Right HV	Flow Scale	Peak Flow Factor
VEHICLES Demand flows in veh/hour as used by the program								
West: PR-3 West Approach								
12	474	1	0	0	0	0	1.00	0.94
11	0	0	884	28	0	0	1.00	0.94
East: PR-3 East Approach								
21	0	0	990	26	0	0	1.00	0.94
23	0	0	0	0	47	0	1.00	0.94
North: Cent. Com. North Approach								

42	72	0	0	0	0	0	1.00	0.94
43	0	0	0	0	398	6	1.00	0.94

Based on unit time = 60 minutes.
Flow Scale and Peak Hour Factor effects included in flow values.

Castillos de la Monta?a
Int. PR-3 & Acceso a Centro Comercial; Hora Pico PM, Transito proyectado
Intersection ID: 3
Actuated Isolated Signals, Cycle Time = 57

Table S.1 - MOVEMENT PHASE AND TIMING PARAMETERS

Mov No.	Mov Typ	PHASE MATRIX First Green Fr To Op Pr	Second Green Fr To Op Pr	Lost Tim 1st Grn	2nd Grn	Req.Mov.Time 1st Grn	2nd Grn	Eff. Grn 1st Grn	2nd Grn
West: PR-3 West Approach									
12	L	*A B		4		19.0Max		15	
11	LT	B D		4		26.8		24	
East: PR-3 East Approach									
21	T	B D		4		27.5		24	
23	R (Un2)	*B D	D B R	4	15	27.5	27.0	24	14
North: Cent. Com. North Approach									
42	L	D A		4		10.0Min		6	
43	R (Un1)	A D R	*D A	18	4	40.1	10.0Min	29	6

Current Phase Sequence No.: 1
Input phase sequence: A B D
Output phase sequence: A B D

Movement Types:
- Ped Pedestrian
- Dum Dummy
- Und Undetected in both green periods
- Unl Undetected in 1st green period
- Un2 Undetected in 2nd green period

Under heading 'Op':
- L "Left" turns are opposed
- R "Right" turns are opposed
- LR "Left and Right" opposed
- C "Constant" saturation flow

Castillos de la Monta?a
Int. PR-3 & Acceso a Centro Comercial; Hora Pico PM, Transito proyectado
Intersection ID: 3
Actuated Isolated Signals, Cycle Time = 57

Table S.2 - MOVEMENT CAPACITY PARAMETERS

Mov No.	Dem Flow (veh /h)	Satn Flow 1st Grn	2nd Grn	Flow Ratio 1st Grn	2nd Grn	Total Cap. (veh /h)	Prac. Deg. Satn xp	Prac. Spare Cap. (%)	Lane Util (%)	Deg. Satn x
West: PR-3 West Approach										

12	L	383	1456<		0.263		383	0.90	-10	100	1.000*
11	LT	1004E	3679		0.273		1549	0.90	39	100	0.648
East: PR-3 East Approach											
21	T	1016	3482		0.292		1466	0.90	30	100	0.693
23	R	47	0	276	0.331	0.169	68	0.90	31	100	0.689
North: Cent. Com. North Approach											
42	L	72	1805		0.040		190	0.90	137	100	0.379
43	R	404	962	1598	0.289	0.079	658	0.90	47	100	0.614

E "Excess" flow from the short lane of an adjacent movement added to normal flow

< Reduced saturation flow due to a short lane effect

Movement 12 has large x because of short lanes.
The degree of saturation of adjacent movement 11 is less than xp, hence this solution may be satisfactory.
See Table S.7 for queue length, delay etc.

Castillos de la Monta?a
Int. PR-3 & Acceso a Centro Comercial; Hora Pico PM, Transito proyectado
Intersection ID: 3
Actuated Isolated Signals, Cycle Time = 57

Table S.3 - INTERSECTION PARAMETERS

Crit Mov No.	App. & Turn	Green Period	Phases Fr	Phases To	Adjusted Lost Time	Adjusted Flow Ratio	Required Grn Time Ratio	Required Movement Time
12	W_L		A	B	19	-	-	19.0Max
23	E_R	1st	B	D	4	0.331	0.413	27.5
43	N_R	2nd	D	A	10	-	-	10.0Min
				Total:	33	0.331	0.413	56.5

- Flow ratio not used for cycle time calculations and the adjusted lost time equals the required movement time (=Min or Max as shown in Table S.1)

Cycle Time:

Minimum	Maximum	Practical	Chosen
30	NA	57	57

Intersection Level of Service	=	C
Worst movement Level of Service	=	D
Average intersection delay (s)	=	20.4
Largest average movement delay (s)	=	38.9
Largest back of queue, 95% (ft)	=	415
Performance Index	=	104.49
Degree of saturation (highest)	=	1.000
Practical Spare Capacity (lowest)	=	-10 %
Total vehicle capacity, all lanes (veh/h)	=	4314
Total vehicle flow (veh/h)	=	2926
Total person flow (pers/h)	=	3511
Total vehicle delay (veh-h/h)	=	16.62
Total person delay (pers-h/h)	=	19.94

Total effective vehicle stops (veh/h)	=	2262
Total effective person stops (pers/h)	=	2714
Total vehicle travel (veh-mi/h)	=	1218.1
Total cost ($/h)	=	570.14
Total fuel (ga/h)	=	64.0
Total CO2 (kg/h)	=	605.71

Castillos de la Monta?a
Int. PR-3 & Acceso a Centro Comercial; Hora Pico PM, Transito proyectado
Intersection ID: 3
Actuated Isolated Signals, Cycle Time = 57

Table S.4 - PHASE INFORMATION

Phase No.	Change Time	Green Start	Displayed Green	Grn+Intgrn Secs	Prop.
A	0	4	15	19	0.333
B	19	23	24	28	0.491
D	47	51	6	10	0.175

Current Phase Sequence No.: 1
Input phase sequence: A B D
Output phase sequence: A B D

Castillos de la Monta?a
Int. PR-3 & Acceso a Centro Comercial; Hora Pico PM, Transito proyectado
Intersection ID: 3
Actuated Isolated Signals, Cycle Time = 57

Table S.8 - LANE FLOW AND CAPACITY INFORMATION

Lan No.	Mov No.	Dem Flow (veh/h) Lef	Thru	Rig	Tot	Lane Width (ft)	Saturation Flow Adj. Basic (tcu)	Aver 1st (veh)	Aver 2nd (veh)	End Cap (veh /h)	Tot Cap (veh /h)	Deg. Satn x	Lane Util %
West: PR-3 West Approach													
1 L	12	383	0	0	383	12.0	1900	1456<	0	0	383	1.000	100
2 LT	11	92E	409	0	501	12.0	1900	1836	0	0	773	0.648	100
3 T	11	0	503	0	503	12.0	1900	1843	0	0	776	0.648	100
East: PR-3 East Approach													
1 T	21	0	541	0	541	12.0	1900	1853	0	0	780	0.693	100
2 TR	21, 23	0	475	47	522	12.0	1900	356	1776	63	754	0.693	100
North: Cent. Com. North Approach													
1 L	42	72	0	0	72	12.0	1900	1805	0	0	190	0.379	100
2 R	43	0	0	404	404	12.0	1900	962	1598	63	658	0.614	100

E "Excess" flow from back of an adjacent short lane
< Reduced saturation flow due to a short lane effect

Basic Saturation Flow in this table is adjusted for lane width, approach grade, parking manoeuvres and number of buses stopping. Saturation flow

scale applies if specified.

Castillos de la Monta?a
Int. PR-3 & Acceso a Centro Comercial; Hora Pico PM, Transito proyectado
Intersection ID: 3
Actuated Isolated Signals, Cycle Time = 57

Table S.10 - MOVEMENT CAPACITY AND PERFORMANCE SUMMARY

Mov No.	Mov Typ	Dem Flow (veh /h)	Total Cap. (veh /h)	Lane Util (%)	Deg. Satn x	Eff. Grn 1st Grn	Eff. Grn 2nd Grn	Aver. Delay (sec)	Eff. Stop Rate	95% Back of Queue (veh)	Perf. Index
West: PR-3 West Approach											
12	L	383	383<	100	1.000*	15*		32.4	0.85	12.3	15.61
11	LT	1004E	1549	100	0.648	24		17.0	0.73	14.7	34.82
East: PR-3 East Approach											
21	T	1016	1466	100	0.693	24		18.9	0.76	16.2	36.46
23	R (Un2)	47	68	100	0.689	24*	14	29.2	0.88	15.6	1.84
North: Cent. Com. North Approach											
42	L	72	190	100	0.379	6		38.9	0.75	2.8	3.18
43	R (Un1)	404	658	100	0.614	29	6*	17.4	0.83	9.0	12.57

E "Excess" flow from the short lane of an adjacent movement added to normal flow
< Reduced capacity due to a short lane effect
* Maximum degree of saturation, or critical green periods

Castillos de la Monta?a
Int. PR-3 & Acceso a Centro Comercial; Hora Pico PM, Transito proyectado
Intersection ID: 3
Actuated Isolated Signals, Cycle Time = 57

Table S.14 - SUMMARY OF INPUT AND OUTPUT DATA

Lane No.	Demand Flow (veh/h) L	T	R	Tot	%HV	Adj. Basic Satf.	Eff Grn (secs) 1st	2nd	Deg Sat x	Aver. Delay (sec)	Longest Queue (ft)	Shrt Lane (ft)
West: PR-3 West Approach												
1 L	383			383	0	1900	15		1.000	32.4r	307*	160
2 LT	383	409		501	3	1900	24		0.648	17.0	374	
3 T		503		503	3	1900	24		0.648	17.0	377	
	475	912	0	1387	2				1.000	21.3	377	
East: PR-3 East Approach												
1 T		541		541	3	1900	24		0.693	18.1	415	
2 TR		475	47	522	2	1900	1	24	0.693	20.5	397	
	0	1016	47	1063	2				0.693	19.3	415	

North: Cent. Com. North Approach

1 L	72			72	0	1900	6		0.379	38.9	70
2 R			404	404	1	1900	29	6	0.614	17.4	228
	72	0	404	476	1				0.614	20.6	228

ALL VEHICLES	Total Flow	% HV	Cycle Time	Max X	Aver. Delay	Max Queue
	2926	2	57	1.000	20.4	415

Total flow period = 60 minutes. Peak flow period = 15 minutes.

Queue values in this table are 95% back of queue (feet).

Note: Basic Saturation Flows (in through car units) have been adjusted for grade, lane widths, parking manoeuvres and bus stops.

* Queue length exceeds short lane length due to specification of a percentile queue in the aaSIDRA Configuration File. For calculation of this statistic, you may specify the lane with full length.

r Delay, stops and queue length for this lane have been cut down to fit in the queuing space. The amount cut may not be accounted for fully in the adjacent lane performance statistics. You may wish to change the short lane to a full lane to investigate the extent of this effect.

Castillos de la Monta?a
Int. PR-3 & Acceso a Centro Comercial; Hora Pico PM, Transito proyectado
Intersection ID: 3
Actuated Isolated Signals, Cycle Time = 57

Table S.15 - CAPACITY AND LEVEL OF SERVICE

Mov No.	Mov Typ	Green Ratio (g/C) 1st grn	Green Ratio (g/C) 2nd grn	Total Flow (veh /h)	Total Cap. (veh /h)	Deg. of Satn (v/c)	Aver. Delay (sec)	LOS
West: PR-3 West Approach								
12 L		0.263*		383	383<	1.000*	32.4	C
11 LT		0.421		1004E	1549	0.648	17.0	B
				1387	1932	1.000	21.3	C
East: PR-3 East Approach								
21 T		0.421		1016	1466	0.693	18.9	B
23 R	(Un2)	0.421*	0.246	47	68	0.689	29.2	C
				1063	1534	0.693	19.3	B
North: Cent. Com. North Approach								
42 L		0.105		72	190	0.379	38.9	D
43 R	(Un1)	0.509	0.105*	404	658	0.614	17.4	B
				476	848	0.614	20.6	C
ALL VEHICLES:				2926	4314	1.000	20.4	C

INTERSECTION (persons):	3511	4314	1.000	20.4

Level of Service calculations are based on
average control delay including geometric delay (HCM criteria),
independent of the current delay definition used.
For the criteria, refer to the "Level of Service" topic in the
aaSIDRA Output Guide or the Output section of the on-line help.

< Reduced capacity due to a short lane effect
* Maximum v/c ratio, or critical green periods
E "Excess" flow from the short lane of an adjacent movement added to normal flow

---

Castillos de la Monta?a
Int. PR-3 & Acceso a Centro Comercial; Hora Pico PM, Transito proyectado
Intersection ID: 3

Table S.23 - SENSITIVITY ANALYSIS RESULTS

Performance Measure	Smallest Value	Param Scale
Degree of Satn	1.000	115
Average Delay	20.4	75
Stop Rate	0.77	70
Max. Queue for Any Movement	16.2	75
Perf. Index	104.5	75
Cost total	570.1	75

Performance Measure	Largest Value	Param Scale
Total Vehicle Cap.	4539	55
Prac. Spare Cap.	-10	115

Castillos de la Monta?a
Int. PR-3 & Acceso a Centro Comercial; Hora Pico PM, Transito proyectado
Intersection ID: 3

Scaled sensitivity parameter: Maximum Green

Table V.23 - INTERSECTION SUMMARY FOR VARIABLE PARAMETER SCALE

Param Scale (%)	Cycle Time (sec)	Total Veh. Cap.	Intersn Deg. of Satn	Prac. Spare Cap.	Aver. Delay (sec)	Stop Rate	Longest Queue (veh)	Perf. Index	Cost Total $/h
50	66	4386	1.000	-10	27.9	0.85	21.3	123.8	615.4
55	68	4539	1.000	-10	24.0	0.79	19.7	117.1	583.3
60	64	4476	1.000	-10	23.1	0.79	18.0	113.3	577.3
65	61	4391	1.000	-10	22.3	0.79	17.5	110.3	586.6
70	61	4429	1.000	-10	21.1	0.77	17.0	107.6	576.0
75	57	4314	1.000	-10	20.4	0.77	16.2	104.5	570.1

80	58	4263	1.000	-10	21.0	0.78	16.8	106.1	575.7
85	60	4268	1.000	-10	21.3	0.78	17.2	107.6	578.4
90	61	4220	1.000	-10	21.9	0.78	17.7	109.3	584.2
95	63	4227	1.000	-10	22.3	0.78	18.1	110.8	587.2
100	66	4219	1.000	-10	23.3	0.79	19.0	114.2	596.4
105	68	4225	1.000	-10	23.6	0.78	19.4	115.5	599.0
110	68	4134	1.000	-10	24.8	0.80	20.1	117.9	609.4
115	70	4142	1.000	-10	25.0	0.80	20.4	119.2	611.8
120	73	4196	1.000	-10	24.9	0.79	20.7	120.3	611.2

--- End of aaSIDRA Output ---

Akcelik & Associates Pty Ltd - aaSIDRA 2.0.0.205

FJRP
Francisco J. Reyes P Registered User No. 50310
Licence Type: Professional, Single Computer

Time and Date of Analysis 2:32 AM, Mar 23,2005

Filename: C:\Documents and Settings\Francisco\My Documents\Francisco\Humacao\Sea View\Sidra\53-VH-3PMF.OUT

Castillos de la Monta?a
InT. PR-3, Rampa PR-53 & Acceso V.H.; Hora Pico PM, Transito proyectado
Intersection ID: 4

aaTraffic SIDRA US Highway Capacity Manual (2000) Version

RUN INFORMATION

Parameter sensitivity run: "Optimum" Maximum Green = 85.0 %

* Basic Parameters:
  Intersection Type: Signalised - Actuated Isolated
  For fully-actuated signal timings, the following specifications will be ignored:
    Any maximum cycle time specification
    Any user-given cycle time (unless phase times also given)
    User-given cycle and phase times (if variable flow scale run)
    Any variable cycle time specification
    Any green split priority specification
  Driving on the right-hand side of the road
  Input data specified in US units
  Default Values File No. 11
  Peak flow period (for performance): 15 minutes
  Unit time (for volumes): 60 minutes (Total Flow Period)
  Delay definition: Control delay
                    Geometric delay included
  HCM Delay and Queue Models option selected
  Level of Service based on: Delay (HCM method)
  Queue definition: Back of queue, 95th Percentile

* No. of Main (Timing-Capacity) Iterations = 3
  Comparison of last two iterations:
    Difference in intersection degree of satn = 0.0 %
    Difference in total vehicle capacity   = 0.1 %
    Largest difference in eff. green times = 1 secs
    (max. value for stopping = 1 secs)
  Information on Previous Iteration:
    Cycle Time = 129
    Phase Times: 0, 21, 68, 106
    Critical Movements: 12, 21, 41, 31

Castillos de la Monta?a
InT. PR-3, Rampa PR-53 & Acceso V.H.; Hora Pico PM, Transito proyectado
Intersection ID: 4

DEFAULT PARAMETERS

Default values for some of the important general parameters:
(Default Values File: DEF11.SDF)

1. Basic saturation flow: 1900 tcu/h

   This value applies mainly to signalised intersections. For roundabouts and sign-controlled intersections, it is used for determining capacity of priority and continuous movements.

2. Through car equivalents for signalised intersections

	LEFT		THROUGH		RIGHT	
	LV	HV	LV	HV	LV	HV
Normal	1.053	2.000	1.000	2.000	1.176	2.000
Restricted	1.303	2.500			1.426	2.500

3. Opposed turn parameters (Signalised intersection)

	Crit. Gap	Fol.up Hdway	Deps at End	% Exit Flow Opposing
Left turns :	4.5	2.5	2.0	0
Right turns:	4.0	2.4	2.5	0

4. Cruise speed= 40 mi/h, Approach Distance= 1800 ft

5. Queue space per vehicle in feet
   Light vehicles: 25.0 Heavy vehicles: 45.0

A full list of input data defaults and ranges is given in the Input Guide part of aaSIDRA User Guide.

Castillos de la Monta?a
InT. PR-3, Rampa PR-53 & Acceso V.H.; Hora Pico PM, Transito proyectado
Intersection ID: 4
Actuated Isolated Signals, Cycle Time = 128

Table S.0 - TRAFFIC FLOW DATA

Mov No.	Left		Through		Right		Flow Scale	Peak Flow Factor
	LV	HV	LV	HV	LV	HV		
VEHICLES	Demand flows in veh/hour as used by the program							
West: PR-. West Approach								
12	244	0	0	0	0	0	1.00	0.97
11	0	0	919	18	0	0	1.00	0.97
13	0	0	0	0	260	0	1.00	0.97
South: South Approach								
32	192	0	0	0	0	0	1.00	0.97
31	0	0	41	0	0	0	1.00	0.97
33	0	0	0	0	77	0	1.00	0.97
East: PR-3 East Approach								
22	49	0	0	0	0	0	1.00	0.97
21	0	0	1080	12	0	0	1.00	0.97
23	0	0	0	0	76	0	1.00	0.97

North: Ramp PR-53 North Approach								
42	278	6	0	0	0	0	1.00	0.97
41	0	0	69	1	0	0	1.00	0.97
43	0	0	0	0	341	7	1.00	0.97

Based on unit time = 60 minutes.
Flow Scale and Peak Hour Factor effects included in flow values.

Castillos de la Monta?a
InT. PR-3, Rampa PR-53 & Acceso V.H.; Hora Pico PM, Transito proyectado
Intersection ID: 4
Actuated Isolated Signals, Cycle Time = 128

Table S.1 - MOVEMENT PHASE AND TIMING PARAMETERS

Mov No.	Mov Typ	PHASE MATRIX First Green Fr	To	Op	Pr	Second Green Fr	To	Op	Pr	Lost Tim 1st Grn	2nd Grn	Req.Mov.Time 1st Grn	2nd Grn	Eff. Grn 1st Grn	2nd Grn
West: PR-. West Approach															
12 L		*A	B							4		21.0Max		17	
11 LT		B	C							4		45.3		43	
13 R	(Und)	B	C			C	B	R		4	5	47.0Max	30.0Min	43	76
South: South Approach															
32 L		D	A							4		21.0Max		18	
31 T		*D	A							4		22.0		18	
33 R	(Und)	A	D	R		D	A			32	4	30.0Min	17.9	74	18
East: PR-3 East Approach															
22 L		A	B							4		12.7		17	
21 T		*B	C							4		47.0Max		43	
23 R	(Und)	B	C			C	B	R		4	5	47.0Max	30.0Min	43	76
North: Ramp PR-53 North Approach															
42 L		C	D							4		21.0Max		34	
41 T		*C	D							4		37.7		34	
43 R	(Und)	C	D			D	C	R		4	42	47.0Max	47.0Max	34	48

Current Phase Sequence No.: 1
Input phase sequence: A B C D
Output phase sequence: A B C D

Movement Types:
- Ped Pedestrian
- Dum Dummy
- Und Undetected in both green periods
- Un1 Undetected in 1st green period
- Un2 Undetected in 2nd green period

Under heading 'Op':
- L "Left" turns are opposed
- R "Right" turns are opposed
- LR "Left and Right" opposed
- C "Constant" saturation flow

Castillos de la Monta?a
InT. PR-3, Rampa PR-53 & Acceso V.H.; Hora Pico PM, Transito proyectado
Intersection ID: 4
Actuated Isolated Signals, Cycle Time = 128

Table S.2 - MOVEMENT CAPACITY PARAMETERS

Mov No.	Dem Flow (veh /h)	Satn Flow 1st Grn	Satn Flow 2nd Grn	Flow Ratio 1st Grn	Flow Ratio 2nd Grn	Total Cap. (veh /h)	Prac. Deg. Satn xp	Prac. Spare Cap. (%)	Lane Util (%)	Deg. Satn x
West: PR-. West Approach										
12 L	240	1805		0.133		240	0.90	-10	100	1.000*
11 LT	941E	3728		0.252		1252	0.90	20	100	0.752
13 R	260	1269<	1237<	0.131	0.076	1161	0.90	302	100	0.224
South: South Approach										
32 L	192	1805		0.106		254	0.90	19	100	0.756
31 T	41	730		0.056		103	0.90	125	53	0.399
33 R	77	88	1010	0.000	0.076	193	0.90	125	53	0.399
East: PR-3 East Approach										
22 L	49	1805		0.027		240	0.90	340	100	0.204
21 T	1092	3497		0.312		1175	0.90	-3	100	0.930
23 R	76	224	11	0.330	0.192	82	0.90	-3	100	0.929
North: Ramp PR-53 North Approach										
42 L	284	1645		0.173		437	0.90	38	100	0.650
41 T	70	405		0.173		108	0.90	38	100	0.651
43 R	348	0	1428	0.302	0.243	536	0.90	39	100	0.650

E "Excess" flow from the short lane of an adjacent movement added to normal flow

< Reduced saturation flow due to a short lane effect

Castillos de la Monta?a
InT. PR-3, Rampa PR-53 & Acceso V.H.; Hora Pico PM, Transito proyectado
Intersection ID: 4
Actuated Isolated Signals, Cycle Time = 128

Table S.3 - INTERSECTION PARAMETERS

Crit Mov No.	App. & Turn	Green Period	Phases Fr	Phases To	Adjusted Lost Time	Adjusted Flow Ratio	Required Grn Time Ratio	Required Movement Time
12	W_L		A	B	21	-	-	21.0Max
21	E_T		B	C	47	-	-	47.0Max
41	N_T		C	D	4	0.173	0.263	37.7
31	S_T		D	A	4	0.056	0.140	22.0
				Total:	76	0.229	0.403	127.6

- Flow ratio not used for cycle time calculations and the adjusted lost time equals the required movement time (=Min or Max as shown in Table S.1)

Cycle Time:

Minimum	Maximum	Practical	Chosen
40	NA	128	128

Intersection Level of Service	=	D
Worst movement Level of Service	=	F
Average intersection delay (s)	=	54.2
Largest average movement delay (s)	=	89.8
Largest back of queue, 95% (ft)	=	1088
Performance Index	=	242.83
Degree of saturation (highest)	=	1.000
Practical Spare Capacity (lowest)	=	-10 %
Total vehicle capacity, all lanes (veh/h)	=	5778
Total vehicle flow (veh/h)	=	3670
Total person flow (pers/h)	=	4404
Total vehicle delay (veh-h/h)	=	55.25
Total person delay (pers-h/h)	=	66.30
Total effective vehicle stops (veh/h)	=	3197
Total effective person stops (pers/h)	=	3836
Total vehicle travel (veh-mi/h)	=	1528.1
Total cost ($/h)	=	1037.60
Total fuel (ga/h)	=	93.7
Total CO2 (kg/h)	=	886.75

Castillos de la Monta?a
InT. PR-3, Rampa PR-53 & Acceso V.H.; Hora Pico PM, Transito proyectado
Intersection ID: 4
Actuated Isolated Signals, Cycle Time = 128

Table S.4 - PHASE INFORMATION

Phase No.	Change Time	Green Start	Displayed Green	Grn+Intgrn Secs	Prop.
A	0	4	17	21	0.164
B	21	25	43	47	0.367
C	68	72	34	38	0.297
D	106	110	18	22	0.172

Current Phase Sequence No.: 1
Input phase sequence: A B C D
Output phase sequence: A B C D

Castillos de la Monta?a
InT. PR-3, Rampa PR-53 & Acceso V.H.; Hora Pico PM, Transito proyectado
Intersection ID: 4
Actuated Isolated Signals, Cycle Time = 128

Table S.8 - LANE FLOW AND CAPACITY INFORMATION

Lan No.	Mov No.	Dem Flow (veh/h) Lef	Thru	Rig	Tot	Lane Width (ft)	Saturation Flow Adj. Basic (tcu)	Aver 1st (veh)	Aver 2nd (veh)	End Cap (veh /h)	Tot Cap (veh /h)	Deg. Satn x	Lane Util %
West: PR-. West Approach													
1 L	12	240	0	0	240	12.0	1900	1805	0	0	240	1.000	100
2 LT	11	4E	466	0	471	12.0	1900	1864	0	0	626	0.752	100
3 T	11	0	471	0	471	12.0	1900	1864	0	0	626	0.752	100

4 R	13	0	0	260	260	12.0	1900	1269<	1237<	28	1161	0.224	100
South:	South Approach												
1 L	32, 31	192	0	0	192	12.0	1900	1805	0	0	254	0.756	100
2 TR	31, 33	0	41	77	118	12.0	1900	1188	1704	28	295	0.400	53P
East:	PR-3 East Approach												
1 L	22	49	0	0	49	12.0	1900	1805	0	0	240	0.204	100
2 T	21	0	587	0	587	12.0	1900	1879	0	0	631	0.930	100
3 TR	21, 23	0	505	76	581	12.0	1900	1840	912	28	625	0.930	100
North:	Ramp PR-53 North Approach												
1 LT	42, 41	284	23	0	307	12.0	1900	1779	0	0	473	0.650	100
2 TR	41, 43	0	47	348	395	12.0	1900	1469	1553	28	608	0.650	100

E "Excess" flow from back of an adjacent short lane
< Reduced saturation flow due to a short lane effect
P Lane under-utilisation found by the "Program"

Basic Saturation Flow in this table is adjusted for lane width, approach grade, parking manoeuvres and number of buses stopping. Saturation flow scale applies if specified.

Castillos de la Monta?a
InT. PR-3, Rampa PR-53 & Acceso V.H.; Hora Pico PM, Transito proyectado
Intersection ID: 4
Actuated Isolated Signals, Cycle Time = 128

Table S.10 - MOVEMENT CAPACITY AND PERFORMANCE SUMMARY

Mov No.	Mov Typ	Dem Flow (veh /h)	Total Cap. (veh /h)	Lane Util (%)	Deg. Satn x	Eff. Grn 1st Grn	Eff. Grn 2nd Grn	Aver. Delay (sec)	Eff. Stop Rate	95% Back of Queue (veh)	Perf. Index
West:	PR-. West Approach										
12 L		240	240	100	1.000*	17*		89.8	0.88	19.1	20.04
11 LT		941E	1252	100	0.752	43		47.3	0.82	30.6	61.98
13 R	(Und)	260	1161<	100	0.224	43	76	9.4	0.67	1.5	5.09
South:	South Approach										
32 L		192	254	100	0.756	18		81.8	0.84	15.6	15.54
31 T		41	103	53	0.399	18*		31.4	0.72	6.2	2.02
33 R	(Und)	77	193	53	0.399	74	18	40.7	0.79	6.2	4.01
East:	PR-3 East Approach										
22 L		49	240	100	0.204	17		65.8	0.75	3.7	3.40
21 T		1092	1175	100	0.930	43*		65.8	1.00	43.1	86.14
23 R	(Und)	76	82	100	0.929	43	76	74.6	1.00	42.4	6.16
North:	Ramp PR-53 North Approach										
42 L		284	437	100	0.650	34		59.3	0.84	20.8	19.54
41 T		70	108	100	0.651	34*		30.5	0.76	20.8	3.46

43	R	(Und)	348	536	100	0.650	34	48	30.3	0.84	15.5	15.45

E "Excess" flow from the short lane of an adjacent movement added to normal flow
< Reduced capacity due to a short lane effect
* Maximum degree of saturation, or critical green periods

Castillos de la Monta?a
InT. PR-3, Rampa PR-53 & Acceso V.H.; Hora Pico PM, Transito proyectado
Intersection ID: 4
Actuated Isolated Signals, Cycle Time = 128

Table S.14 - SUMMARY OF INPUT AND OUTPUT DATA

Lane No.	Demand Flow (veh/h) L	T	R	Tot	%HV	Adj. Basic Satf.	Eff Grn (secs) 1st	2nd	Deg Sat x	Aver. Delay (sec)	Longest Queue (ft)	Shrt Lane (ft)
West: PR-. West Approach												
1 L	240			240	0	1900	17		1.000	89.8r	478*	260
2 LT	240	466		471	2	1900	43		0.752	47.3	776	
3 T		471		471	2	1900	43		0.752	47.3	777	
4 R			260	260	0	1900	43	76	0.224	9.4	38	260
	244	937	260	1441	1				1.000	47.5	777	
South: South Approach												
1 L	192			192	0	1900	18		0.756	81.8	389	
2 TR		41	77	118	0	1900	6	18	0.400	37.5	154	
	192	41	77	310	0				0.756	65.2	389	
East: PR-3 East Approach												
1 L	49			49	0	1900	17		0.204	65.8	92	260
2 T		587		587	1	1900	43		0.930	66.3	1088	
3 TR		505	76	581	1	1900	43	1	0.930	66.4	1068	
	49	1092	76	1217	1				0.930	66.4	1088	
North: Ramp PR-53 North Approach												
1 LT	284	23		307	2	1900	34		0.650	58.8	529	
2 TR		47	348	395	2	1900	17	34	0.650	29.2	394	
	284	70	348	702	2				0.650	42.2	529	

ALL VEHICLES	Total Flow	% HV	Cycle Time	Max X	Aver. Delay	Max Queue
	3670	1	128	1.000	54.2	1088

Total flow period = 60 minutes. Peak flow period = 15 minutes.

Queue values in this table are 95% back of queue (feet).

Note: Basic Saturation Flows (in through car units) have been adjusted for grade, lane widths, parking manoeuvres and bus stops.

* Queue length exceeds short lane length due to specification of a percentile queue in the aaSIDRA Configuration File. For calculation

of this statistic, you may specify the lane with full length.

r Delay, stops and queue length for this lane have been cut down to fit in the queuing space. The amount cut may not be accounted for fully in the adjacent lane performance statistics. You may wish to change the short lane to a full lane to investigate the extent of this effect.

Castillos de la Monta?a
InT. PR-3, Rampa PR-53 & Acceso V.H.; Hora Pico PM, Transito proyectado
Intersection ID: 4
Actuated Isolated Signals, Cycle Time = 128

Table S.15 - CAPACITY AND LEVEL OF SERVICE

Mov No.	Mov Typ	Green Ratio 1st grn	Green Ratio 2nd grn	Total Flow (veh /h)	Total Cap. (veh /h)	Deg. of Satn (v/c)	Aver. Delay (sec)	LOS
West: PR-. West Approach								
12 L		0.133*		240	240	1.000*	89.8	F
11 LT		0.336		941E	1252	0.752	47.3	D
13 R	(Und)	0.336	0.594	260	1161<	0.224	9.4	A
				1441	2653	1.000	47.5	D
South: South Approach								
32 L		0.141		192	254	0.756	81.8	F
31 T		0.141*		41	103	0.399	31.4	C
33 R	(Und)	0.578	0.141	77	193	0.399	40.7	D
				310	549	0.756	64.9	E
East: PR-3 East Approach								
22 L		0.133		49	240	0.204	65.8	E
21 T		0.336*		1092	1175	0.930	65.8	E
23 R	(Und)	0.336	0.594	76	82	0.929	74.6	E
				1217	1496	0.930	66.4	E
North: Ramp PR-53 North Approach								
42 L		0.266		284	437	0.650	59.3	E
41 T		0.266*		70	108	0.651	30.5	C
43 R	(Und)	0.266	0.375	348	536	0.650	30.3	C
				702	1080	0.651	42.0	D
ALL VEHICLES:				3670	5778	1.000	54.2	D
INTERSECTION (persons):				4404	5778	1.000	54.2	

Level of Service calculations are based on
average control delay including geometric delay (HCM criteria),
independent of the current delay definition used.
For the criteria, refer to the "Level of Service" topic in the
aaSIDRA Output Guide or the Output section of the on-line help.
< Reduced capacity due to a short lane effect

* Maximum v/c ratio, or critical green periods
E "Excess" flow from the short lane of an adjacent movement added to normal flow

---

Castillos de la Monta?a
InT. PR-3, Rampa PR-53 & Acceso V.H.; Hora Pico PM, Transito proyectado
Intersection ID: 4

Table S.23 - SENSITIVITY ANALYSIS RESULTS

Performance Measure	Smallest Value	Param Scale
Degree of Satn	0.973	100
Average Delay	54.2	85
Stop Rate	0.85	110
Max. Queue for Any Movement	40.5	55
Perf. Index	233.7	55
Cost total	1037.6	85

Performance Measure	Largest Value	Param Scale
Total Vehicle Cap.	5826	95
Prac. Spare Cap.	-8	100

Castillos de la Monta?a
InT. PR-3, Rampa PR-53 & Acceso V.H.; Hora Pico PM, Transito proyectado
Intersection ID: 4

Scaled sensitivity parameter: Maximum Green

Table V.23 - INTERSECTION SUMMARY FOR VARIABLE PARAMETER SCALE

Param Scale (%)	Cycle Time (sec)	Total Veh. Cap.	Intersn Deg. of Satn	Prac. Spare Cap.	Aver. Delay (sec)	Stop Rate	Longest Queue (veh)	Perf. Index	Cost Total $/h
50	87	5475	1.091	-17	64.7	1.03	40.9	236.9	1154.5
55	94	5553	1.062	-15	60.6	0.98	40.5	233.7	1110.5
60	99	5574	1.033	-13	59.3	0.96	40.9	234.6	1096.0
65	105	5638	1.005	-10	56.9	0.93	40.6	234.4	1069.1
70	110	5671	1.000	-10	56.2	0.92	41.2	236.1	1061.1
75	117	5713	1.000	-10	55.4	0.90	42.0	238.7	1051.2
80	122	5738	1.000	-10	55.2	0.89	42.8	241.7	1049.0
85	128	5778	1.000	-10	54.2	0.87	43.1	242.8	1037.6
90	133	5796	0.999	-10	54.5	0.86	44.1	246.3	1040.1
95	140	5826	0.996	-10	55.0	0.86	45.2	251.4	1044.8
100	144	5813	0.973	-8	55.3	0.85	45.6	254.3	1047.2
105	149	5801	1.000	-10	56.3	0.85	46.7	259.1	1055.7
110	152	5805	1.000	-10	57.0	0.85	47.4	262.5	1063.1
115	160	5633	1.000	-10	61.2	0.85	49.2	277.5	1114.4
120	164	5609	1.000	-10	62.9	0.86	50.6	283.8	1132.4

--- End of aaSIDRA Output ---

Akcelik & Associates Pty Ltd - aaSIDRA 2.0.0.205

FJRP
Francisco J. Reyes P Registered User No. 50310
Licence Type: Professional, Single Computer

Time and Date of Analysis 2:28 AM, Mar 23,2005

Filename: C:\Documents and Settings\Francisco\My Documents\Francisco\Humacao\Sea View\Sidra\925-3-53PMF.OUT

Castillos de la Monta?as
Int. PR-3, PR-925 & Rampa PR-53; Hora Pico PM, Transito proyectado
Intersection ID: 5

aaTraffic SIDRA US Highway Capacity Manual (2000) Version

RUN INFORMATION

Parameter sensitivity run: "Optimum" Maximum Green = 50.0 %

* Basic Parameters:
  Intersection Type: Signalised - Actuated Isolated
  For fully-actuated signal timings, the following specifications will be ignored:
    Any maximum cycle time specification
    Any user-given cycle time (unless phase times also given)
    User-given cycle and phase times (if variable flow scale run)
    Any variable cycle time specification
    Any green split priority specification
  Driving on the right-hand side of the road
  Input data specified in US units
  Default Values File No. 11
  Peak flow period (for performance): 15 minutes
  Unit time (for volumes): 60 minutes (Total Flow Period)
  Delay definition: Control delay
                    Geometric delay included
  HCM Delay and Queue Models option selected
  Level of Service based on: Delay (HCM method)
  Queue definition: Back of queue, 95th Percentile

* No. of Main (Timing-Capacity) Iterations = 3
  Comparison of last two iterations:
    Difference in intersection degree of satn = 1.2 %
    Difference in total vehicle capacity   = 0.3 %
    Largest difference in eff. green times = 1 secs
    (max. value for stopping = 2 secs)
  Information on Previous Iteration:
    Cycle Time = 99
    Phase Times: 0, 14, 43, 70
    Critical Movements: 12, 13(1st), 33, 43(2nd)

Castillos de la Monta?as
Int. PR-3, PR-925 & Rampa PR-53; Hora Pico PM, Transito proyectado
Intersection ID: 5

DEFAULT PARAMETERS

Default values for some of the important general parameters:
(Default Values File: DEF11.SDF)

1. Basic saturation flow: 1900 tcu/h

   This value applies mainly to signalised intersections. For roundabouts and sign-controlled intersections, it is used for determining capacity of priority and continuous movements.

2. Through car equivalents for signalised intersections

	LEFT		THROUGH		RIGHT	
	LV	HV	LV	HV	LV	HV
Normal	1.053	2.000	1.000	2.000	1.176	2.000
Restricted	1.303	2.500			1.426	2.500

3. Opposed turn parameters (Signalised intersection)

	Crit. Gap	Fol.up Hdway	Deps at End	% Exit Flow Opposing
Left turns :	4.5	2.5	2.0	0
Right turns:	4.0	2.4	2.5	0

4. Cruise speed= 40 mi/h, Approach Distance= 1800 ft

5. Queue space per vehicle in feet
   Light vehicles: 25.0 Heavy vehicles: 45.0

A full list of input data defaults and ranges is given in the Input Guide part of aaSIDRA User Guide.

Castillos de la Monta?as
Int. PR-3, PR-925 & Rampa PR-53; Hora Pico PM, Transito proyectado
Intersection ID: 5
Actuated Isolated Signals, Cycle Time = 98

Table S.0 - TRAFFIC FLOW DATA

Mov No.	Left LV	Left HV	Through LV	Through HV	Right LV	Right HV	Flow Scale	Peak Flow Factor
VEHICLES Demand flows in veh/hour as used by the program								
West: PR-3 West Approach								
12	348	31	0	0	0	0	1.00	0.88
11	0	0	1541	17	0	0	1.00	0.88
13	0	0	0	0	426	10	1.00	0.88
South: Ramp PR-53 South Approach								
32	282	2	0	0	0	0	1.00	0.88
33	0	0	18	0	74	3	1.00	0.88
East: PR-3 East Approach								
22	355	11	0	0	0	0	1.00	0.88
21	0	0	1324	17	0	0	1.00	0.88
23	0	0	0	0	223	1	1.00	0.88

North: PR-925 North Approach								
42	56	2	0	0	0	0	1.00	0.88
41	0	0	85	3	0	0	1.00	0.88
43	0	0	0	0	266	3	1.00	0.88

Based on unit time = 60 minutes.
Flow Scale and Peak Hour Factor effects included in flow values.

Castillos de la Monta?as
Int. PR-3, PR-925 & Rampa PR-53; Hora Pico PM, Transito proyectado
Intersection ID: 5
Actuated Isolated Signals, Cycle Time = 98

Table S.1 - MOVEMENT PHASE AND TIMING PARAMETERS

Mov No.	Mov Typ	PHASE MATRIX First Green Fr	To	Op	Pr	Second Green Fr	To	Op	Pr	Lost Tim 1st Grn	Lost Tim 2nd Grn	Req.Mov.Time 1st Grn	Req.Mov.Time 2nd Grn	Eff. Grn 1st Grn	Eff. Grn 2nd Grn
West: PR-3 West Approach															
12 L		*A	B							4		14.0Max		10	
11 LT		B	C							4		29.0Max		25	
13 R	(Un2)	*B	C			C	B	R		4	15	29.0Max	30.0Min	25	54
South: Ramp PR-53 South Approach															
32 L		C	D							4		14.0Max		22	
33 TR	(Un2)	*C	D							4		25.5		22	
East: PR-3 East Approach															
22 L		A	B							4		14.0Max		10	
21 LT		B	C							4		29.0Max		25	
North: PR-925 North Approach															
42 L		D	A							4		14.0Max		25	
41 T		D	A							4		22.4		25	
43 R	(Un1)	A	D	R		*D	A			29	4	29.0Max	29.0Max	40	25

Current Phase Sequence No.: 1
Input phase sequence: A B C D
Output phase sequence: A B C D

Movement Types:
- Ped Pedestrian
- Dum Dummy
- Und Undetected in both green periods
- Un1 Undetected in 1st green period
- Un2 Undetected in 2nd green period

Under heading 'Op':
- L "Left" turns are opposed
- R "Right" turns are opposed
- LR "Left and Right" opposed
- C "Constant" saturation flow

Castillos de la Monta?as
Int. PR-3, PR-925 & Rampa PR-53; Hora Pico PM, Transito proyectado
Intersection ID: 5
Actuated Isolated Signals, Cycle Time = 98

Table S.2 - MOVEMENT CAPACITY PARAMETERS

Mov No.	Dem Flow (veh /h)	Satn Flow 1st Grn	Satn Flow 2nd Grn	Flow Ratio 1st Grn	Flow Ratio 2nd Grn	Total Cap. (veh /h)	Prac. Deg. Satn xp	Prac. Spare Cap. (%)	Lane Util (%)	Deg. Satn x
West: PR-3 West Approach										
12 L	217	1681		0.129		172	0.90	-29	100	1.267
11 LT	1720E	4656<		0.369		1188	0.90	-38	69	1.448*
13 R	436	506<	557<	0.242	0.563	436	0.90	-10	69	1.000
South: Ramp PR-53 South Approach										
32 L	284	2513<		0.113		564	0.90	79	100	0.503
33 TR	95	841<		0.113		189	0.90	79	100	0.503
East: PR-3 East Approach										
22 L	227	1757		0.129		179	0.90	-29	100	1.267
21 LT	1480E	5593		0.265		1427	0.90	-13	100	1.037
23 R	224	1610		0.139		1610	0.98	604	100	0.139
North: PR-925 North Approach										
42 L	58	716		0.081		183	0.90	183	70	0.318
41 T	88	1086		0.081		277	0.90	183	70	0.318
43 R	269	1026<	690<	0.139	0.183	595	0.90	99	100	0.452

E "Excess" flow from the short lane of an adjacent movement added to normal flow

< Reduced saturation flow due to a short lane effect

Castillos de la Monta?as
Int. PR-3, PR-925 & Rampa PR-53; Hora Pico PM, Transito proyectado
Intersection ID: 5
Actuated Isolated Signals, Cycle Time = 98

Table S.3 - INTERSECTION PARAMETERS

Crit Mov No.	App. & Turn	Green Period	Phases Fr	Phases To	Adjusted Lost Time	Adjusted Flow Ratio	Required Grn Time Ratio	Required Movement Time
12	W_L		A	B	14	-	-	14.0Max
13	W_R	1st	B	C	29	-	-	29.0Max
33	S_TR		C	D	4	0.113	0.219	25.5
43	N_R	2nd	D	A	29	-	-	29.0Max
				Total:	76	0.113	0.219	97.5

- Flow ratio not used for cycle time calculations and the adjusted lost time equals the required movement time (=Min or Max as shown in Table S.1)

Cycle Time:

Minimum	Maximum	Practical	Chosen
40	NA	98	98

Intersection Level of Service = F
Worst movement Level of Service = F

Average intersection delay (s)	=	122.7
Largest average movement delay (s)	=	219.5
Largest back of queue, 95% (ft)	=	1902
Performance Index	=	479.72
Degree of saturation (highest)	=	1.448
Practical Spare Capacity (lowest)	=	-38 %
Total vehicle capacity, all lanes (veh/h)	=	6921
Total vehicle flow (veh/h)	=	5098
Total person flow (pers/h)	=	6118
Total vehicle delay (veh-h/h)	=	173.74
Total person delay (pers-h/h)	=	208.49
Total effective vehicle stops (veh/h)	=	6329
Total effective person stops (pers/h)	=	7595
Total vehicle travel (veh-mi/h)	=	2122.8
Total cost ($/h)	=	2426.66
Total fuel (ga/h)	=	178.1
Total CO2 (kg/h)	=	1686.40

Castillos de la Monta?as
Int. PR-3, PR-925 & Rampa PR-53; Hora Pico PM, Transito proyectado
Intersection ID: 5
Actuated Isolated Signals, Cycle Time = 98

Table S.4 - PHASE INFORMATION

Phase No.	Change Time	Green Start	Displayed Green	Grn+Intgrn Secs	Prop.
A	0	4	10	14	0.143
B	14	18	25	29	0.296
C	43	47	22	26	0.265
D	69	73	25	29	0.296

Current Phase Sequence No.: 1
Input phase sequence: A B C D
Output phase sequence: A B C D

Castillos de la Monta?as
Int. PR-3, PR-925 & Rampa PR-53; Hora Pico PM, Transito proyectado
Intersection ID: 5
Actuated Isolated Signals, Cycle Time = 98

Table S.8 - LANE FLOW AND CAPACITY INFORMATION

Lan No.	Mov No.	Dem Flow (veh/h) Lef	Thru	Rig	Tot	Lane Width (ft)	Saturation Flow Adj. Basic (tcu)	Aver 1st (veh)	Aver 2nd (veh)	End Cap (veh /h)	Tot Cap (veh /h)	Deg. Satn x	Lane Util %
West: PR-3 West Approach													
1 L	12	217	0	0	217	12.0	1900	1681	0	0	172	1.267	100
2 LT	11	162E	533	0	694	12.0	1900	1879	0	0	479	1.448	100
3 T	11	0	694	0E	694	12.0	1900	1879	0	0	479	1.448	100
4 TR	11, 13	0	331	436	767	12.0	1900	890<	981<	37	767	1.000	69P

South: Ramp PR-53 South Approach														
1	L	32	203	0	0	203	12.0	1900	1794	0	0	403	0.503	100
2	LTR	32, 33	81	18	77	176	12.0	1900	1560<	0	0	350	0.503	100
East: PR-3 East Approach														
1	L	22	227	0	0	227	12.0	1900	1757	0	0	179	1.267	100
2	LT	21	139E	348	0	487	12.0	1900	1841	0	0	470	1.037	100
3	T	21	0	496	0	496	12.0	1900	1876	0	0	479	1.037	100
4	T	21	0	496	0	496	12.0	1900	1876	0	0	479	1.037	100
5	R	23	0	0	224	224	12.0	1900	1610	1610	0	1610	0.139	100
North: PR-925 North Approach														
1	LT	42, 41	58	88	0	146	12.0	1900	1802	0	0	460	0.318	70P
2	R	41, 43	0	0	269	269	12.0	1900	1026<	690<	37	595	0.452	100

E "Excess" flow from back of an adjacent short lane
< Reduced saturation flow due to a short lane effect
P Lane under-utilisation found by the "Program"

Basic Saturation Flow in this table is adjusted for lane width, approach grade, parking manoeuvres and number of buses stopping. Saturation flow scale applies if specified.

Castillos de la Monta?as
Int. PR-3, PR-925 & Rampa PR-53; Hora Pico PM, Transito proyectado
Intersection ID: 5
Actuated Isolated Signals, Cycle Time = 98

Table S.10 - MOVEMENT CAPACITY AND PERFORMANCE SUMMARY

Mov No.	Mov Typ	Dem Flow (veh /h)	Total Cap. (veh /h)	Lane Util (%)	Deg. Satn x	Eff. Grn 1st Grn	Eff. Grn 2nd Grn	Aver. Delay (sec)	Eff. Stop Rate	95% Back of Queue (veh)	Perf. Index
West: PR-3 West Approach											
12	L	217	172	100	1.267	10*		219.5	1.34	24.1	30.64
11	LT	1720E	1188<	69	1.448*	25		206.4	1.66	75.4	234.82
13	R (Un2)	436E	436<	69	1.000	25*	54	13.8	0.84	19.1	14.13
South: Ramp PR-53 South Approach											
32	L	284	564<	100	0.503	22		47.8	0.81	11.1	16.00
33	TR (Un2)	95	189<	100	0.503	22*		46.4	0.79	9.7	5.30
East: PR-3 East Approach											
22	L	227	179	100	1.267	10		217.3	1.34	25.0	31.81
21	LT	1480E	1427	100	1.037	25		92.9	1.19	36.0	127.31
23	R (Con)	224	1610	100	0.139	98		9.1	0.65	5.6 #	3.70
North: PR-925 North Approach											
42	L	58	183	70	0.318	25		42.9	0.79	7.4	3.02
41	T	88	277	70	0.318	25		33.8	0.68	7.4	4.31
43	R (Un1)	269	595<	100	0.452	40	25*	16.6	0.78	6.9	8.67

E "Excess" flow from the short lane of an adjacent movement

added to normal flow
< Reduced capacity due to a short lane effect
* Maximum degree of saturation, or critical green periods
# Largest density (passenger cars per km or mile) for any lane

---

Castillos de la Monta?as
Int. PR-3, PR-925 & Rampa PR-53; Hora Pico PM, Transito proyectado
Intersection ID: 5
Actuated Isolated Signals, Cycle Time = 98

Table S.14 - SUMMARY OF INPUT AND OUTPUT DATA

Lane No.	Demand Flow (veh/h) L	T	R	Tot	%HV	Adj. Basic Satf.	Eff Grn (secs) 1st	2nd	Deg Sat x	Aver. Delay (sec)	Longest Queue (ft)	Shrt Lane (ft)
West: PR-3 West Approach												
1 L	217			217	8	1900	10		1.267	219.5r	642*	360
2 LT	217	533		694	3	1900	25		1.448	254.7	1927	
3 T		694		694	1	1900	25		1.448	254.7	1902	
4 TR		331	436	767	2	1900	25	54	1.000	9.7r	485*	260
	379	1558	436	2373	3				1.448	172.2	1927	
South: Ramp PR-53 South Approach												
1 L	203			203	1	1900	22		0.503	47.9	278	
2 LTR	81	18	77	176	2	1900	22		0.503	47.1	246	260
	284	18	77	379	1				0.503	47.5	278	250d
East: PR-3 East Approach												
1 L	227			227	3	1900	10		1.267	217.3r	639*	360
2 LT	227	348		487	2	1900	25		1.037	93.2	900	
3 T		496		496	1	1900	25		1.037	92.8	910	
4 T		496		496	1	1900	25		1.037	92.8	910	
5 R			224	224	0	1900	98		0.139	9.1		260
	366	1341	224	1931	2				1.267	97.8	910	
North: PR-925 North Approach												
1 LT	58	88		146	3	1900	25		0.318	37.5	190	
2 R			269	269	1	1900	40	25	0.452	16.6	175	260
	58	88	269	415	2				0.452	23.9	190	250d

ALL VEHICLES	Total Flow	% HV	Cycle Time	Max X	Aver. Delay	Max Queue
	5098	2	98	1.448	122.7	1902

Total flow period = 60 minutes. Peak flow period = 15 minutes.

Queue values in this table are 95% back of queue (feet).

Note: Basic Saturation Flows (in through car units) have been adjusted for grade, lane widths, parking manoeuvres and bus stops.

* Queue length exceeds short lane length due to specification of a

percentile queue in the aaSIDRA Configuration File. For calculation of this statistic, you may specify the lane with full length.

d Short lane length on departure side.

r Delay, stops and queue length for this lane have been cut down to fit in the queuing space. The amount cut may not be accounted for fully in the adjacent lane performance statistics. You may wish to change the short lane to a full lane to investigate the extent of this effect.

Castillos de la Monta?as
Int. PR-3, PR-925 & Rampa PR-53; Hora Pico PM, Transito proyectado
Intersection ID: 5
Actuated Isolated Signals, Cycle Time = 98

Table S.15 - CAPACITY AND LEVEL OF SERVICE

Mov No.	Mov Typ	Green Ratio (g/C) 1st grn	2nd grn	Total Flow (veh /h)	Total Cap. (veh /h)	Deg. of Satn (v/c)	Aver. Delay (sec)	LOS
West: PR-3 West Approach								
12 L		0.102*		217	172	1.267	219.5	F
11 LT		0.255		1720E	1188<	1.448*	206.4	F
13 R	(Un2)	0.255*	0.551	436E	436<	1.000	13.8	B
				2373	1795	1.448	172.2	F
South: Ramp PR-53 South Approach								
32 L		0.224		284	564<	0.503	47.8	D
33 TR	(Un2)	0.224*		95	189<	0.503	46.4	D
				379	753	0.503	47.5	D
East: PR-3 East Approach								
22 L		0.102		227	179	1.267	217.3	F
21 LT		0.255		1480E	1427	1.037	92.9	F
23 R	(Con)	1.000		224	1610	0.139	9.1	A#
				1931	3216	1.267	97.8	F
North: PR-925 North Approach								
42 L		0.255		58	183	0.318	42.9	D
41 T		0.255		88	277	0.318	33.8	C
43 R	(Un1)	0.408	0.255*	269	595<	0.452	16.6	B
				415	1054	0.452	23.9	C
ALL VEHICLES:				5098	6921	1.448	122.7	F
INTERSECTION (persons):				6118	6921	1.448	122.7	

Level of Service calculations are based on
average control delay including geometric delay (HCM criteria),
independent of the current delay definition used.
For the criteria, refer to the "Level of Service" topic in the

aaSIDRA Output Guide or the Output section of the on-line help.
Level Of Service for continuous movements based on density
< Reduced capacity due to a short lane effect
* Maximum v/c ratio, or critical green periods
E "Excess" flow from the short lane of an adjacent movement added to normal flow

---

Castillos de la Monta?as
Int. PR-3, PR-925 & Rampa PR-53; Hora Pico PM, Transito proyectado
Intersection ID: 5

Table S.23 - SENSITIVITY ANALYSIS RESULTS

Performance Measure	Smallest Value	Param Scale
Degree of Satn	1.443	55
Average Delay	122.7	50
Stop Rate	1.11	120
Max. Queue for Any Movement	75.4	50
Perf. Index	479.7	50
Cost total	2426.7	50

Performance Measure	Largest Value	Param Scale
Total Vehicle Cap.	6921	50
Prac. Spare Cap.	-38	55

Castillos de la Monta?as
Int. PR-3, PR-925 & Rampa PR-53; Hora Pico PM, Transito proyectado
Intersection ID: 5

Scaled sensitivity parameter: Maximum Green

Table V.23 - INTERSECTION SUMMARY FOR VARIABLE PARAMETER SCALE

Param Scale (%)	Cycle Time (sec)	Total Veh. Cap.	Intersn Deg. of Satn	Prac. Spare Cap.	Aver. Delay (sec)	Stop Rate	Longest Queue (veh)	Perf. Index	Cost Total $/h
50	98	6921	1.448	-38	122.7	1.24	75.4	479.7	2426.7
55	107	6917	1.443	-38	123.0	1.22	79.5	488.8	2430.2
60	114	6899	1.453	-38	125.6	1.21	83.1	501.4	2466.9
65	123	6901	1.446	-38	125.9	1.19	86.6	510.4	2470.0
70	129	6897	1.444	-38	126.4	1.18	89.3	517.2	2476.1
75	138	6886	1.449	-38	129.1	1.17	94.1	532.0	2513.8
80	145	6867	1.461	-38	132.7	1.16	98.0	546.9	2563.9
85	153	6876	1.450	-38	132.4	1.15	101.0	553.7	2557.9
90	159	6872	1.453	-38	134.0	1.14	104.0	563.2	2579.9
95	168	6855	1.461	-38	137.9	1.14	109.1	581.0	2633.9
100	174	6851	1.464	-39	139.9	1.13	112.2	591.2	2660.6
105	183	6844	1.464	-39	142.0	1.12	116.1	604.5	2688.9
110	190	6819	1.479	-39	146.2	1.12	120.6	620.6	2746.9
115	199	6812	1.478	-39	148.1	1.12	124.4	633.3	2772.2

120	205	6805	1.478	-39	149.3	1.11	127.1	641.3	2787.0

--- End of aaSIDRA Output ---

Akcelik & Associates Pty Ltd - aaSIDRA 2.0.0.205

FJRP
Francisco J. Reyes P Registered User No. 50310
Licence Type: Professional, Single Computer

Time and Date of Analysis 2:54 AM, Mar 23,2005

Filename: C:\Documents and Settings\Francisco\My Documents\Francisco\Humacao\Sea View\Sidra\CM1-3PMF.OUT

CASTILLOS DE LA MONTANA
Acceso principal: Hora Pico PM
Intersection ID: A1

aaTraffic SIDRA US Highway Capacity Manual (2000) Version

RUN INFORMATION
---

* Basic Parameters:
  Intersection Type: Unsignalised - Two-Way Stop Control
  Driving on the right-hand side of the road
  Input data specified in US units
  Default Values File No. 11
  Peak flow period (for performance): 15 minutes
  Unit time (for volumes): 60 minutes (Total Flow Period)
  Delay definition: Control delay
  Geometric delay included
  HCM Delay and Queue Models option selected
  Level of Service based on: Delay (HCM method)
  Queue definition: Back of queue, 95th Percentile

CASTILLOS DE LA MONTANA
Acceso principal: Hora Pico PM
Intersection ID: A1

DEFAULT PARAMETERS

Default values for some of the important general parameters:
(Default Values File: DEF11.SDF)

1. Basic saturation flow: 1900 tcu/h

   This value applies mainly to signalised intersections. For roundabouts and sign-controlled intersections, it is used for determining capacity of priority and continuous movements.

2. Through car equivalents for signalised intersections

	LEFT		THROUGH		RIGHT	
	LV	HV	LV	HV	LV	HV
Normal	1.053	2.000	1.000	2.000	1.176	2.000
Restricted	1.303	2.500			1.426	2.500

3. Opposed turn parameters (Two-Way Stop Control)

	Crit. Gap	Fol.up Hdway	Min. Deps	% Exit Flow Opposing
Left turns :	7.5	3.5	2.0	50
Through :	6.5	4.0	2.0	50
Right turns:	6.9	3.3	2.0	50
Opposed turns from priority road:	4.1	2.2	2.0	0

4. Cruise speed= 40 mi/h, Approach Distance= 1800 ft

5. Queue space per vehicle in feet
   Light vehicles: 25.0 Heavy vehicles: 45.0

A full list of input data defaults and ranges is given in the Input Guide part of aaSIDRA User Guide.

CASTILLOS DE LA MONTANA
Acceso principal: Hora Pico PM
Intersection ID: A1
Stop Sign Controlled Intersection

Table S.0 - TRAFFIC FLOW DATA

Mov No.	Left LV	Left HV	Through LV	Through HV	Right LV	Right HV	Flow Scale	Peak Flow Factor
VEHICLES Demand flows in veh/hour as used by the program								
West: Peoyecto West Approach								
12	26	0	0	0	0	0	1.00	0.90
13	0	0	0	0	77	0	1.00	0.90
South: PR-925 South Approach								
32	153	0	201	3	0	0	1.00	0.90
North: PR-925 North Approach								
42	0	0	120	0	0	0	1.00	0.90
43	0	0	0	0	50	0	1.00	0.90

Based on unit time = 60 minutes.
Flow Scale and Peak Hour Factor effects included in flow values.

CASTILLOS DE LA MONTANA
Acceso principal: Hora Pico PM
Intersection ID: A1
Stop Sign Controlled Intersection

Table S.2 - MOVEMENT CAPACITY PARAMETERS

Mov No.	Dem Flow (veh /h)	Total Opng Flow (veh/h)	%HV	Adjust. Opng Flow (pcu/h)	Total Cap. (veh /h)	Prac. Deg. Satn xp	Prac. Spare Cap. (%)	Lane Util (%)	Deg. Satn x

West: Peoyecto West Approach										
12	L	26	349+	0.9	349	586	0.80	1703	100	0.044
13	R	77	145+	0.0	145	805<	0.80	736	100	0.096
South: PR-925 South Approach										
32	LT	357	120	0.0	120	1679	0.80	276	100	0.213*
North: PR-925 North Approach										
42	T	120	0			1275	0.80	750	100	0.094
43	R	50	0			531	0.80	750	100	0.094

< Reduced saturation flow due to a short lane effect
+ Percentage of exiting flow included in total opposing flow

CASTILLOS DE LA MONTANA
Acceso principal: Hora Pico PM
Intersection ID: A1
Stop Sign Controlled Intersection

Table S.3 - INTERSECTION PARAMETERS

Intersection Level of Service	=	A
Worst movement Level of Service	=	B
Average intersection delay (s)	=	5.0
Largest average movement delay (s)	=	11.4
Largest back of queue, 95% (ft)	=	37
Performance Index	=	9.39
Degree of saturation (highest)	=	0.213
Practical Spare Capacity (lowest)	=	276 %
Total vehicle capacity, all lanes (veh/h)	=	4877
Total vehicle flow (veh/h)	=	630
Total person flow (pers/h)	=	756
Total vehicle delay (veh-h/h)	=	0.88
Total person delay (pers-h/h)	=	1.06
Total effective vehicle stops (veh/h)	=	224
Total effective person stops (pers/h)	=	269
Total vehicle travel (veh-mi/h)	=	261.8
Total cost ($/h)	=	98.34
Total fuel (ga/h)	=	11.0
Total CO2 (kg/h)	=	103.73

CASTILLOS DE LA MONTANA
Acceso principal: Hora Pico PM
Intersection ID: A1
Stop Sign Controlled Intersection

Table S.8 - LANE FLOW AND CAPACITY INFORMATION

Lan No.	Mov No.	Dem Flow (veh/h) Lef	Thru	Rig	Tot	Min Cap (veh /h)	Tot Cap (veh /h)	Deg. Satn x	Lane Util %
West: Peoyecto West Approach									
1 L	12	26	0	0	26	26	586	0.044	100
2 R	13	0	0	77	77	77	805<	0.096	100

South: PR-925 South Approach									
1 LT	32	153	204	0	357	258	1679	0.213	100
North: PR-925 North Approach									
1 TR	42, 43	0	120	50	170	170	1806	0.094	100

< Reduced capacity flow due to a short lane effect

The capacity value for priority and continuous movements is obtained by adjusting the basic saturation flow for heavy vehicle and turning vehicle effects. Saturation flow scale applies if specified.

CASTILLOS DE LA MONTANA
Acceso principal: Hora Pico PM
Intersection ID: A1
Stop Sign Controlled Intersection

Table S.10 - MOVEMENT CAPACITY AND PERFORMANCE SUMMARY

Mov No.	Mov Typ	Dem Flow (veh /h)	Total Cap. (veh /h)	Lane Util (%)	Deg. Satn x	Aver. Delay (sec)	Eff. Stop Rate	95% Back of Queue (veh)	Perf. Index
West: Peoyecto West Approach									
12	L	26	586	100	0.044	11.4	0.86	0.3	0.56
13	R	77	805<	100	0.096	9.9	0.85	0.5	1.54
South: PR-925 South Approach									
32	LT	357	1679	100	0.213*	4.6	0.28	1.5	5.19
North: PR-925 North Approach									
42	T	120	1275	100	0.094	0.0	0.00	0.0	1.25
43	R	50	531	100	0.094	9.6	0.72	0.0	0.85

< Reduced capacity due to a short lane effect

* Maximum degree of saturation

CASTILLOS DE LA MONTANA
Acceso principal: Hora Pico PM
Intersection ID: A1
Stop Sign Controlled Intersection

Table S.14 - SUMMARY OF INPUT AND OUTPUT DATA

Lane No.	Demand Flow (veh/h) L	T	R	Tot	%HV	Adj. Basic Satf.	Eff Grn (secs) 1st	2nd	Deg Sat x	Aver. Delay (sec)	Longest Queue (ft)	Shrt Lane (ft)
West: Peoyecto West Approach												
1 L	26			26	0				0.044	11.4	7	
2 R			77	77	0				0.096	9.9	14	160

	26	0	77	103	0	0.096	10.3	14
South: PR-925 South Approach								
1 LT	153	204		357	1	0.213	4.6	37
	153	204	0	357	1	0.213	4.6	37
North: PR-925 North Approach								
1 TR		120	50	170	0	0.094	2.8	0
	0	120	50	170	0	0.094	2.8	

ALL VEHICLES	Total Flow	% HV	Max X	Aver. Delay	Max Queue
	630	0	0.213	5.0	37

Total flow period = 60 minutes. Peak flow period = 15 minutes.

Queue values in this table are 95% back of queue (feet).

Note: Basic Saturation Flows are not adjusted at roundabouts or sign-controlled intersections and apply only to continuous lanes.

CASTILLOS DE LA MONTANA
Acceso principal: Hora Pico PM
Intersection ID: A1
Stop Sign Controlled Intersection

Table S.15 - CAPACITY AND LEVEL OF SERVICE

Mov No.	Mov Typ	Total Flow (veh /h)	Total Cap. (veh /h)	Deg. of Satn (v/c)	Aver. Delay (sec)	LOS
West: Peoyecto West Approach						
12	L	26	586	0.044	11.4	B
13	R	77	805<	0.096	9.9	A
		103	1391	0.096	10.3	B
South: PR-925 South Approach						
32	LT	357	1679	0.213*	4.6	A
		357	1679	0.213	4.6	A
North: PR-925 North Approach						
42	T	120	1275	0.094	0.0	A
43	R	50	531	0.094	9.6	A
		170	1806	0.094	2.8	A
ALL VEHICLES:		630	4877	0.213	5.0	A

Level of Service calculations are based on average control delay including geometric delay (HCM criteria), independent of the current delay definition used.
For the criteria, refer to the "Level of Service" topic in the

aaSIDRA Output Guide or the Output section of the on-line help.

< Reduced capacity due to a short lane effect
* Maximum v/c ratio, or critical green periods

--- End of aaSIDRA Output ---

Akcelik & Associates Pty Ltd - aaSIDRA 2.0.0.205

FJRP
Francisco J. Reyes P Registered User No. 50310
Licence Type: Professional, Single Computer

Time and Date of Analysis 3:19 AM, Mar 23,2005

Filename: C:\Documents and Settings\Francisco\My Documents\Francisco\Humacao\Sea View\Sidra\CM2-3PMF.OUT

CASTILLOS DE LA MONTANA
Acceso secundario: Hora Pico PM
Intersection ID: A2

aaTraffic SIDRA US Highway Capacity Manual (2000) Version

RUN INFORMATION

* Basic Parameters:
  Intersection Type: Unsignalised - Two-Way Stop Control
  Driving on the right-hand side of the road
  Input data specified in US units
  Default Values File No. 11
  Peak flow period (for performance): 15 minutes
  Unit time (for volumes): 60 minutes (Total Flow Period)
  Delay definition: Control delay
                Geometric delay included
  HCM Delay and Queue Models option selected
  Level of Service based on: Delay (HCM method)
  Queue definition: Back of queue, 95th Percentile

CASTILLOS DE LA MONTANA
Acceso secundario: Hora Pico PM
Intersection ID: A2

DEFAULT PARAMETERS

Default values for some of the important general parameters:
(Default Values File: DEF11.SDF)

1. Basic saturation flow: 1900 tcu/h

   This value applies mainly to signalised intersections. For roundabouts and sign-controlled intersections, it is used for determining capacity of priority and continuous movements.

2. Through car equivalents for signalised intersections

	LEFT		THROUGH		RIGHT	
	LV	HV	LV	HV	LV	HV
Normal	1.053	2.000	1.000	2.000	1.176	2.000
Restricted	1.303	2.500			1.426	2.500

3. Opposed turn parameters (Two-Way Stop Control)

	Crit. Gap	Fol.up Hdway	Min. Deps	% Exit Flow Opposing
Left turns :	7.5	3.5	2.0	50
Through :	6.5	4.0	2.0	50
Right turns:	6.9	3.3	2.0	50
Opposed turns from priority road:				
	4.1	2.2	2.0	0

4. Cruise speed= 40 mi/h, Approach Distance= 1800 ft

5. Queue space per vehicle in feet
   Light vehicles: 25.0 Heavy vehicles: 45.0

A full list of input data defaults and ranges is given in the Input Guide part of aaSIDRA User Guide.

CASTILLOS DE LA MONTANA
Acceso secundario: Hora Pico PM
Intersection ID: A2
Stop Sign Controlled Intersection

Table S.0 - TRAFFIC FLOW DATA

Mov No.	Left LV	Left HV	Through LV	Through HV	Right LV	Right HV	Flow Scale	Peak Flow Factor
VEHICLES Demand flows in veh/hour as used by the program								
South: PR-925 South Approach								
32	0	0	60	0	0	0	1.00	0.92
33	0	0	0	0	81	0	1.00	0.90
East: Proyecto East Approach								
22	40	0	0	0	0	0	1.00	0.90
23	0	0	0	0	10	0	1.00	0.90
North: PR-925 North Approach								
42	20	0	102	0	0	0	1.00	0.90

Based on unit time = 60 minutes.
Flow Scale and Peak Hour Factor effects included in flow values.

CASTILLOS DE LA MONTANA
Acceso secundario: Hora Pico PM
Intersection ID: A2
Stop Sign Controlled Intersection

Table S.2 - MOVEMENT CAPACITY PARAMETERS

Mov No.	Dem Flow (veh /h)	Total Opng Flow (veh/h)	%HV	Adjust. Opng Flow (pcu/h)	Total Cap. (veh /h)	Prac. Deg. Satn xp	Prac. Spare Cap. (%)	Lane Util (%)	Deg. Satn x
South: PR-925 South Approach									
32 T	60	0			734	0.80	879	100	0.082*

33	R	81	0			991	0.80	879	100	0.082*

East: Proyecto East Approach

22	L	40	203+	0.0	203	621	0.80	1142	100	0.064
23	R	10	101+	0.0	101	155	0.80	1140	100	0.065

North: PR-925 North Approach

42	LT	122	60	0.0	60	1833	0.80	1102	100	0.067

\+ Percentage of exiting flow included in total opposing flow

---

CASTILLOS DE LA MONTANA
Acceso secundario: Hora Pico PM
Intersection ID: A2
Stop Sign Controlled Intersection

Table S.3 - INTERSECTION PARAMETERS

Intersection Level of Service	=	A
Worst movement Level of Service	=	A
Average intersection delay (s)	=	4.8
Largest average movement delay (s)	=	10.0
Largest back of queue, 95% (ft)	=	11
Performance Index	=	4.56
Degree of saturation (highest)	=	0.082
Practical Spare Capacity (lowest)	=	879 %
Total vehicle capacity, all lanes (veh/h)	=	4334
Total vehicle flow (veh/h)	=	313
Total person flow (pers/h)	=	376
Total vehicle delay (veh-h/h)	=	0.41
Total person delay (pers-h/h)	=	0.50
Total effective vehicle stops (veh/h)	=	114
Total effective person stops (pers/h)	=	137
Total vehicle travel (veh-mi/h)	=	130.1
Total cost ($/h)	=	48.28
Total fuel (ga/h)	=	5.3
Total CO2 (kg/h)	=	50.16

CASTILLOS DE LA MONTANA
Acceso secundario: Hora Pico PM
Intersection ID: A2
Stop Sign Controlled Intersection

Table S.8 - LANE FLOW AND CAPACITY INFORMATION

Lan No.	Mov No.	Dem Flow (veh/h) Lef	Thru	Rig	Tot	Min Cap (veh /h)	Tot Cap (veh /h)	Deg. Satn x	Lane Util %
South: PR-925 South Approach									
1 TR	32, 33	0	60	81	141	141	1725	0.082	100
East: Proyecto East Approach									
1 LR	22,	40	0	10	50	50	776	0.064	100

North: PR-925 North Approach									
1 LT	42	20	102	0	122	122	1833	0.067	100

The capacity value for priority and continuous movements is obtained by adjusting the basic saturation flow for heavy vehicle and turning vehicle effects. Saturation flow scale applies if specified.

CASTILLOS DE LA MONTANA
Acceso secundario: Hora Pico PM
Intersection ID: A2
Stop Sign Controlled Intersection

Table S.10 - MOVEMENT CAPACITY AND PERFORMANCE SUMMARY

Mov No.	Mov Typ	Dem Flow (veh /h)	Total Cap. (veh /h)	Lane Util (%)	Deg. Satn x	Aver. Delay (sec)	Eff. Stop Rate	95% Back of Queue (veh)	Perf. Index
South: PR-925 South Approach									
32	T	60	734	100	0.082*	0.0	0.00	0.0	0.63
33	R	81	991	100	0.082*	9.6	0.72	0.0	1.38
East: Proyecto East Approach									
22	L	40	621	100	0.064	10.0	0.86	0.4	0.82
23	R	10	155	100	0.065	10.0	0.80	0.4	0.20
North: PR-925 North Approach									
42	LT	122	1833	100	0.067	1.8	0.11	0.4	1.54

* Maximum degree of saturation

CASTILLOS DE LA MONTANA
Acceso secundario: Hora Pico PM
Intersection ID: A2
Stop Sign Controlled Intersection

Table S.14 - SUMMARY OF INPUT AND OUTPUT DATA

Lane No.	Demand Flow (veh/h) L	T	R	Tot	%HV	Adj. Basic Satf.	Eff Grn (secs) 1st	2nd	Deg Sat x	Aver. Delay (sec)	Longest Queue (ft)	Shrt Lane (ft)
South: PR-925 South Approach												
1 TR		60	81	141	0				0.082	5.5	0	
	0	60	81	141	0				0.082	5.5		
East: Proyecto East Approach												
1 LR	40		10	50	0				0.064	10.0	10	
	40	0	10	50	0				0.064	10.0	10	

North: PR-925 North Approach								
1 LT	20	102		122	0	0.067	1.8	11
	20	102	0	122	0	0.067	1.8	11
ALL VEHICLES				Total Flow	% HV	Max X	Aver. Delay	Max Queue
				313	0	0.082	4.8	11

Total flow period = 60 minutes. Peak flow period = 15 minutes.

Queue values in this table are 95% back of queue (feet).

Note: Basic Saturation Flows are not adjusted at roundabouts or sign-controlled intersections and apply only to continuous lanes.

CASTILLOS DE LA MONTANA
Acceso secundario: Hora Pico PM
Intersection ID: A2
Stop Sign Controlled Intersection

Table S.15 - CAPACITY AND LEVEL OF SERVICE

Mov No.	Mov Typ	Total Flow (veh /h)	Total Cap. (veh /h)	Deg. of Satn (v/c)	Aver. Delay (sec)	LOS
South: PR-925 South Approach						
32	T	60	734	0.082*	0.0	A
33	R	81	991	0.082*	9.6	A
		141	1725	0.082	5.5	A
East: Proyecto East Approach						
22	L	40	621	0.064	10.0	A
23	R	10	155	0.065	10.0	A
		50	776	0.065	10.0	A
North: PR-925 North Approach						
42	LT	122	1833	0.067	1.8	A
		122	1833	0.067	1.8	A
ALL VEHICLES:		313	4334	0.082	4.8	A

Level of Service calculations are based on average control delay including geometric delay (HCM criteria), independent of the current delay definition used.
For the criteria, refer to the "Level of Service" topic in the aaSIDRA Output Guide or the Output section of the on-line help.
* Maximum v/c ratio, or critical green periods

--- End of aaSIDRA Output ---