Apéndice H

Estudio de Tránsito

ESTUDIO DE TRANSITO

SEA VIEW II
Carretera PR-925, Bo. Antón Ruiz
Humacao, Puerto Rico

Abril de 2009

STI

Servicios Técnicos Integrados
Guaynabo, Puerto Rico

TABLA DE CONTENIDO

LISTA DE FIGURAS 2

LISTA DE ANEJOS 3

SECCION 1.0
INTRODUCCION 4

SECCION 2.0
METODOLOGIA 13

SECCION 3.0
GENERACION DE VIAJES 20

SECCION 4.0
ANALISIS DE TRANSITO 30

SECCION 5.0
CONCLUSIONES Y RECOMENDACIONES 51

LISTA DE FIGURAS

Figura Núm. 1 ..... Mapa de Localización

Figura Núm. 2 ..... Fotografía Aérea

Figura Núm. 3 ..... Características de las Intersecciones Existentes

Figura Núm. 3A ..... Características de las Intersecciones Propuestas

Figura Núm. 4 ..... Volúmenes Vehiculares Año 2009, Hora Pico (AM)

Figura Núm. 5 ..... Volúmenes Vehiculares Año 2009, Hora Pico (PM)

Figura Núm. 6 ..... Distribución porcentual viajes generados por proyecto (AM)

Figura Núm. 7 ..... Distribución porcentual viajes generados por proyecto (PM)

Figura Núm. 8 ..... Volúmenes Vehiculares, Hora Pico AM con proyecto Año 2011

Figura Núm. 9 ..... Volúmenes Vehiculares, Hora Pico PM con proyecto Año 2011

Figura Núm. 10 ..... Niveles de Servicio y Demora Promedio, Hora Pico AM Año 2009

Figura Núm. 11 ..... Niveles de Servicio y Demora Promedio, Hora Pico PM Año 2009

Figura Núm. 12 .. Niveles de Servicio y Demora Promedio, Hora Pico AM Sin proyecto Año 2011

Figura Núm. 13 ... Niveles de Servicio y Demora Promedio, Hora Pico PM sin proyecto Año 2011

Figura Núm. 14 .. Niveles de Servicio y Demora Promedio, Hora Pico AM con proyecto Año 2011

Figura Núm. 15 .. Niveles de Servicio y Demora Promedio, Hora Pico PM con proyecto Año 2011

LISTA DE ANEJOS

Anejo 1 .....Datos De Transito

Anejo 2 ..... Generación de Viajes

Anejo 3 ..... Análisis de Tránsito (SIDRA), AÑ0 2009

Anejo 4 .....Análisis de Tránsito (SIDRA), AÑ0 2011 Sin Proyecto

Anejo 5 ..... Análisis de Tránsito (SIDRA), AÑ0 2011 Con Proyecto

Servicios Técnicos Integrados,. Saturno 2070. Urb. Apolo. Guaynabo PR 00969. Tel (787) 790-3854

SECCION 1.0

INTRODUCCION

La firma Desarrolladora April Industries Group, propone el desarrollo residencial Sea View Garden en una finca localizada en la carretera estatal PR-925 del Barrio Antón Ruiz del Municipio de Humacao. Este desarrollo contará de dos fases:

- Sea View I con 210 unidades de viviendas tipo "walk-up" y tipo "walk-down" y 92 unidades de viviendas unifamiliares.
- Sea View II con 720 unidades de viviendas tipo "walk-up" y tipo "walk-down"

Se prevé que este desarrollo este construido para el año 2011.

Figura Núm. 1: Mapa de Localización

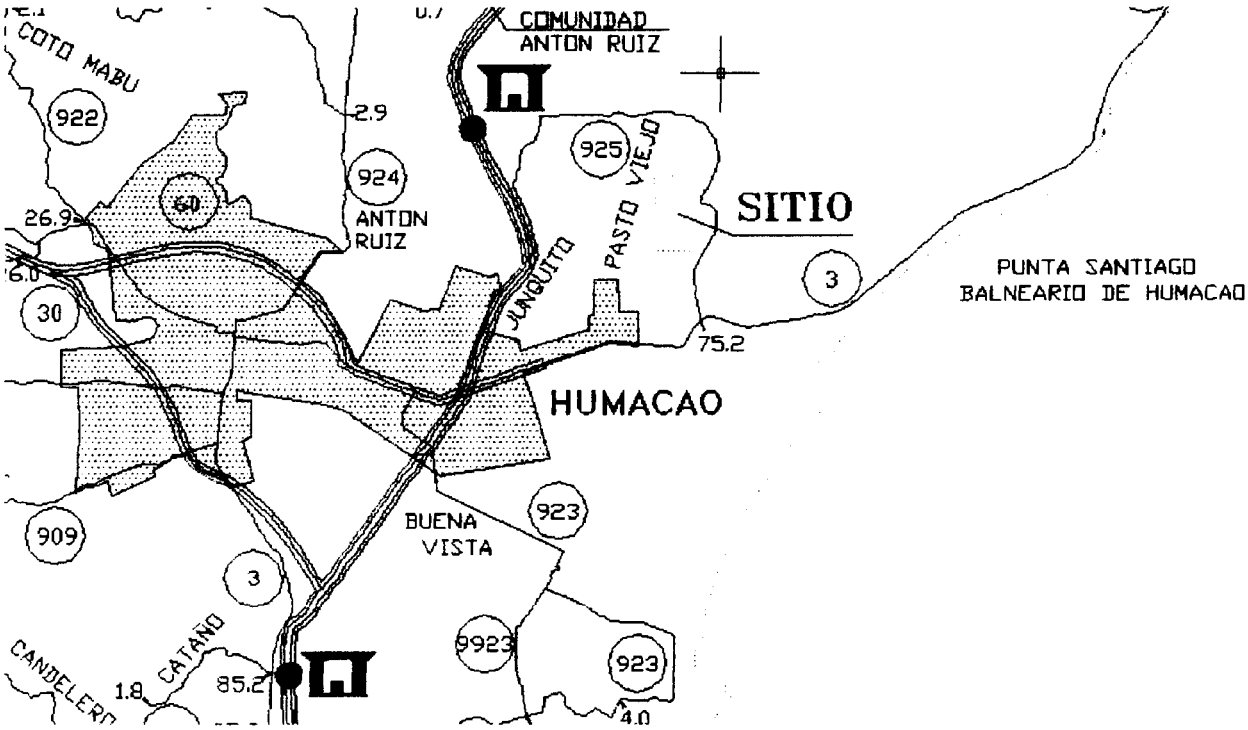

Figura Núm. 2: Foto Aérea

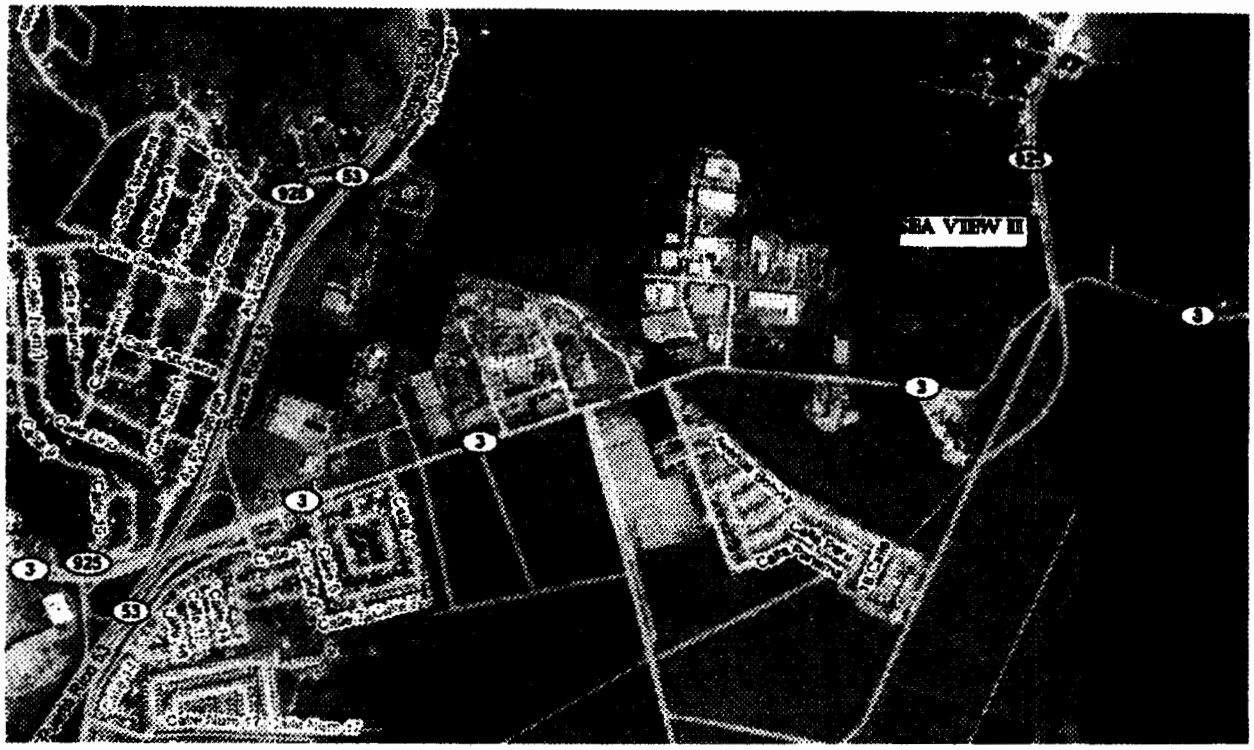

El objetivo de este informe es presentar los resultados del Estudio de Tránsito llevado a cabo para evaluar los efectos que tendría el propuesto desarrollo residencial en el tránsito vehicular del área. Las intersecciones estudiadas son las siguientes:

1. Carreteras estatales PR-3, PR-925 y Rampa oeste de PR-53
2. Carreteras estatal PR-3 y Rampa este de PR-53
3. Carreteras estatal PR-3 y Acceso a Centro Comercial (JC Penney)
4. Carreteras estatal PR-3 y Acceso a Ciudad Cristiana
5. Carreteras estatales PR-3 y PR-925
6. Carretera estatal PR-925 & Acceso Este al desarrollo (Principal ,próximo a PR-3)
7. Carretera estatal PR-925 & Acceso Oeste al desarrollo (Secundario)

La Figura Num. 3 muestra las características de las intersecciones estudiadas.

Servicios Técnicos Integrados,. Saturno 2070. Urb. Apolo, Guaynabo PR 00969. Tel (787) 790-3854

Figura Núm. 3: Características de las intersecciones

Intersección PR-925 & PR-3 (existente)

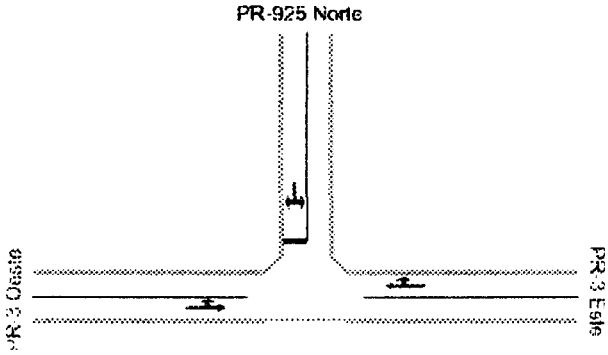

Intersección PR-3 & acceso Ciudad Cristiana

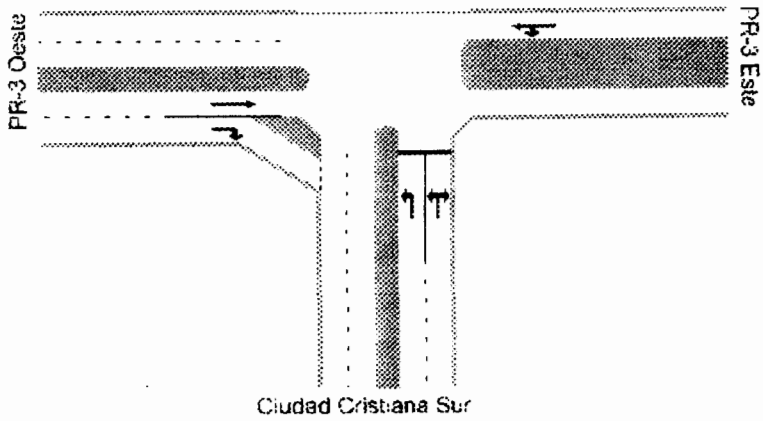

Int. PR-3 & Acceso a Centro Comercial

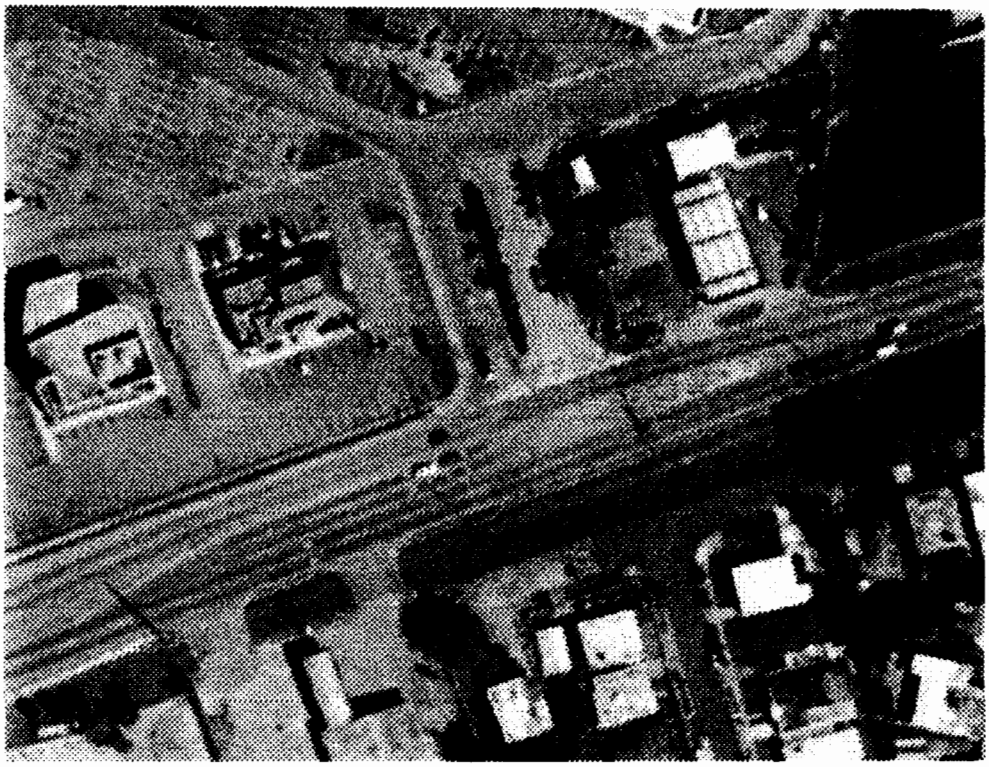

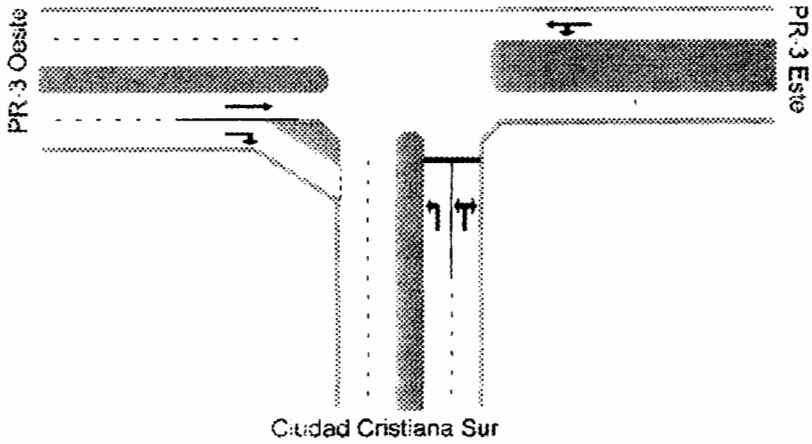

Int. PR-3, Rampa PR-53 & Acceso Villas de Humacao

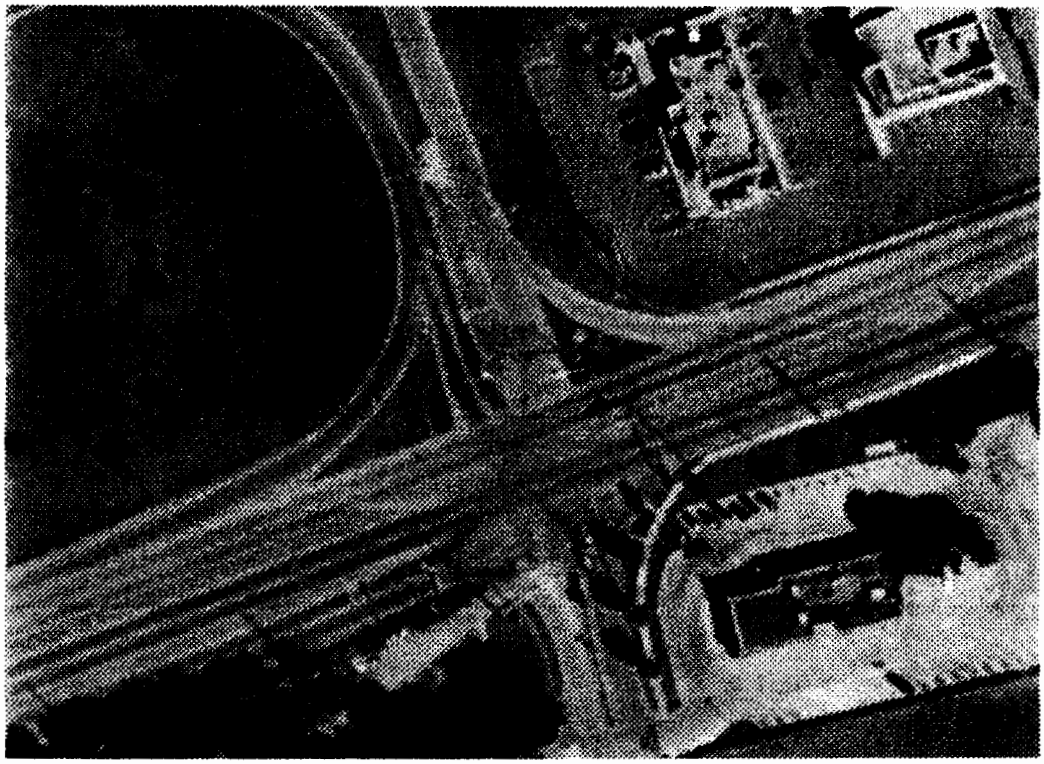

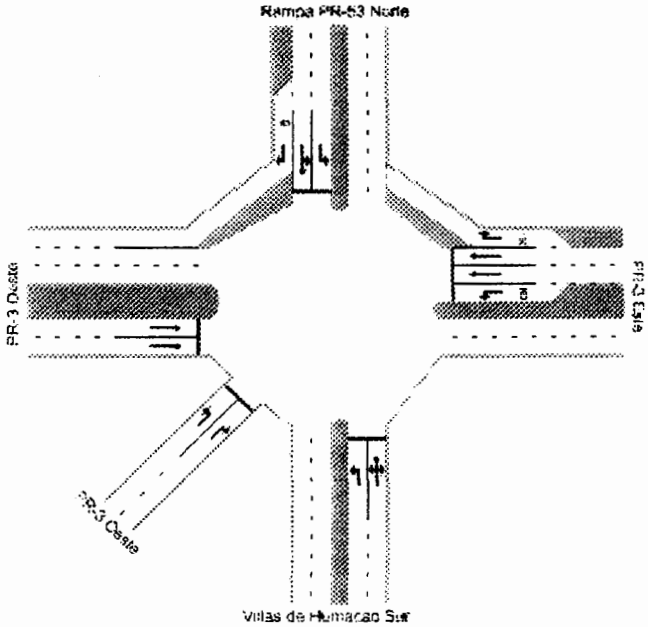

Int. PR-3, PR-925 & Rampa PR-53

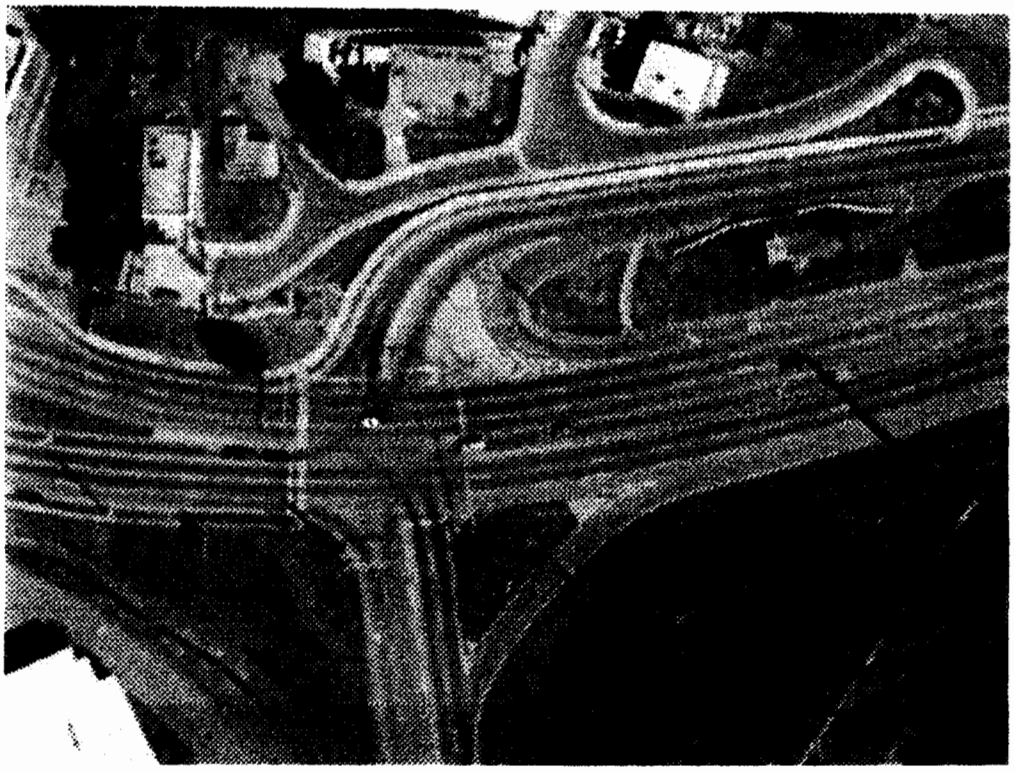

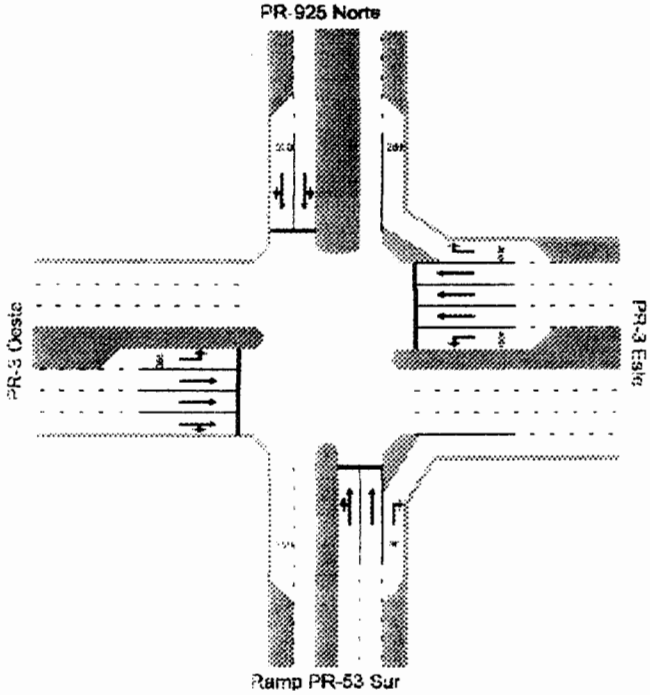

El Acceso al desarrollo propuesto será por la carretera PR-925, este informe recomienda el ensanche de esta vía, a 4 carriles, desde el Acceso Este hasta la carretera PR-3. Además deberá mejorarse la intersección de estas carreteras a fin de proveer carriles cortos de virajes en la PR-3, Ver Figura 3A.

Figura 3A: Características de las intersecciones Propuestas.

Intersección PR-925 & PR-3 (propuesta)

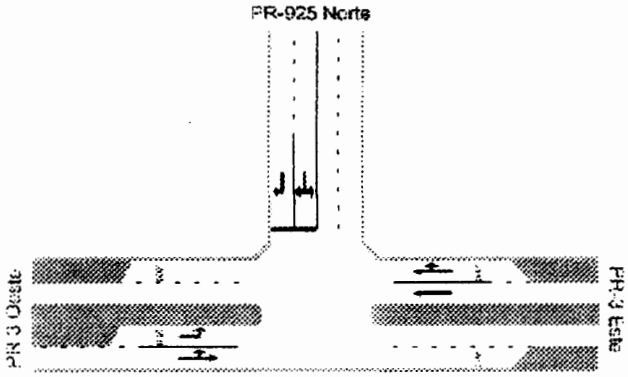

Acceso Este (propuesta)

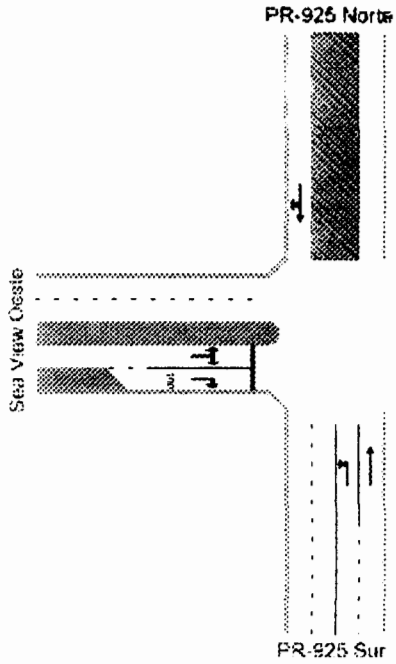

Acceso Oeste (propuesta)

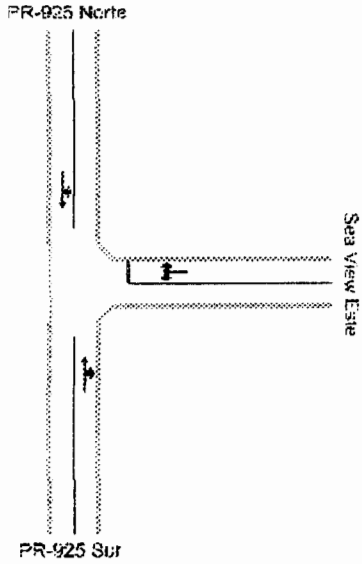

SECCION 2.0

METODOLOGIA

Para desarrollar este informe se han hecho estudios del tránsito actual y proyectado en la carretera estatal PR-3, en la intersección más próxima al desarrollo. Se ha tomado en consideración el tránsito a ser generado por el desarrollo propuesto.

Personal técnico de STI, realizó conteos manuales de tránsito de 12 horas los días martes 17 y miércoles 18 de marzo de 2009, Estos día representan condiciones de tránsito promedio en la semana (ver Anejo 1). Las figuras números 4 y 5 muestran los volúmenes de tránsito actuales de las intersecciones durante las Horas Pico AM y PM respectivamente.

Se determinaron los volúmenes de tránsito a ser generados por el propuesto desarrollo los mismos fueron distribuidos siguiendo los patrones de tránsito existentes en el área. Utilizando los datos antes mencionados en combinación con el modelo de computadora aaSIDRA 2.0, se determinó el nivel de servicio actual y futuro en cada intersección estudiada.

Figura Núm. 4: Volúmenes de Tránsito de Hora Pico AM, 2009

Intersección PR-925 & PR-3

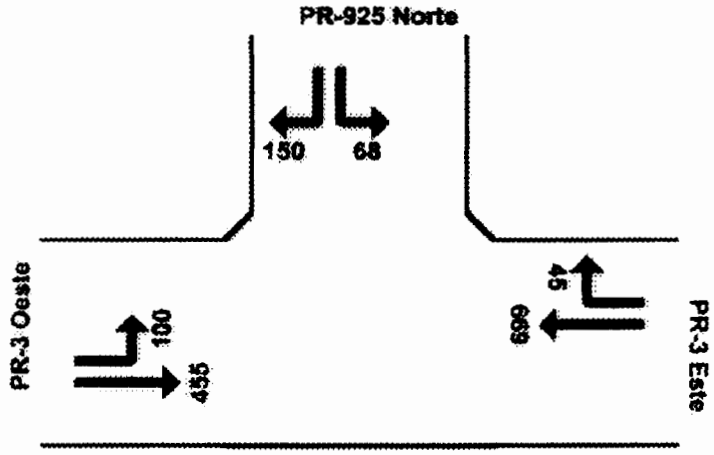

Intersección PR-3 & acceso Ciudad Cristiana

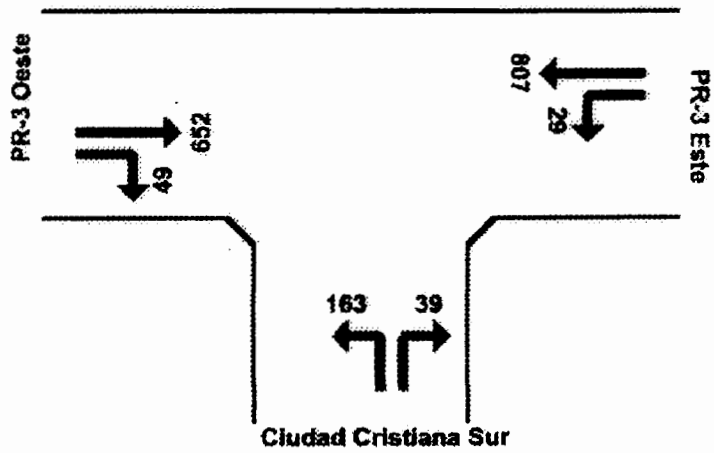

Int. PR-3 & Acceso a Centro Comercial

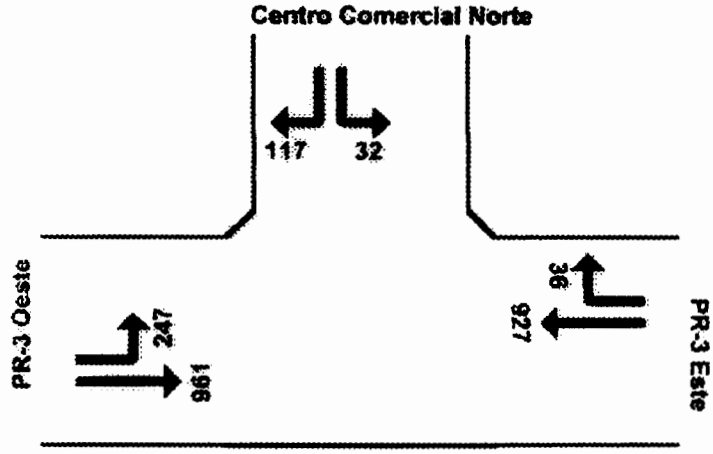

Int. PR-3, Rampa PR-53 & Acceso Villas de Humacao

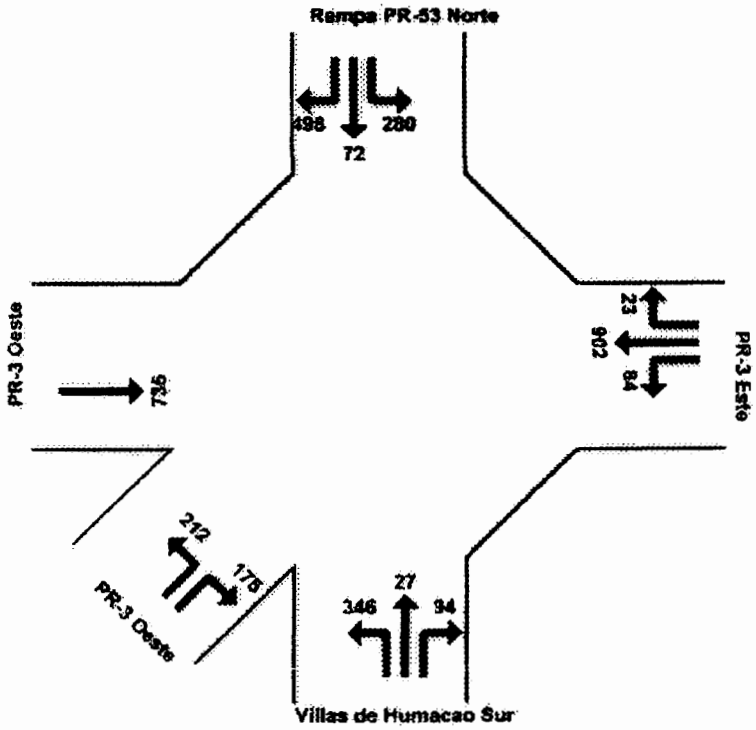

Int. PR-3, PR-925 & Rampa PR-53

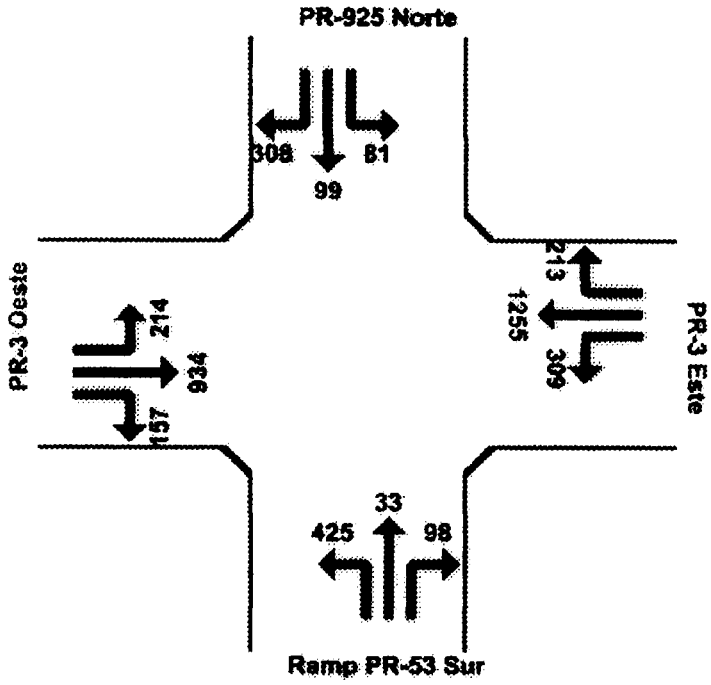

Figura Núm. 5: Volúmenes de Tránsito de Hora Pico PM, 2009

Intersección PR-925 & PR-3

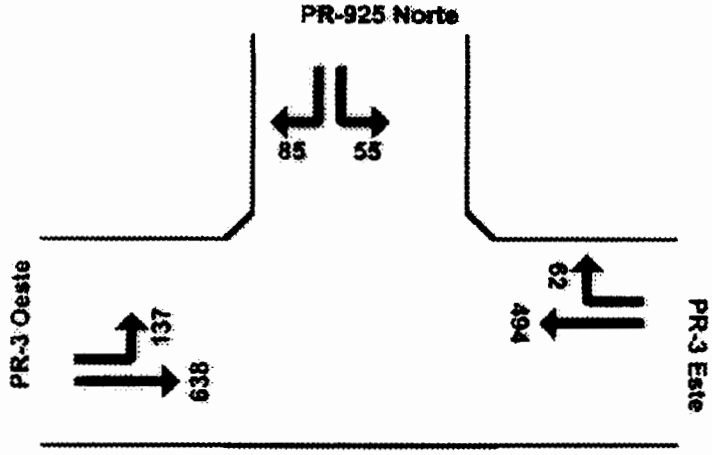

Intersección PR-3 & acceso Ciudad Cristiana

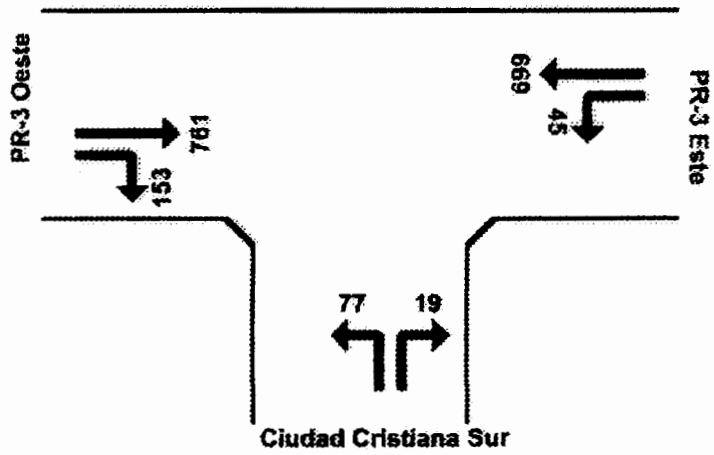

Int. PR-3 & Acceso a Centro Comercial

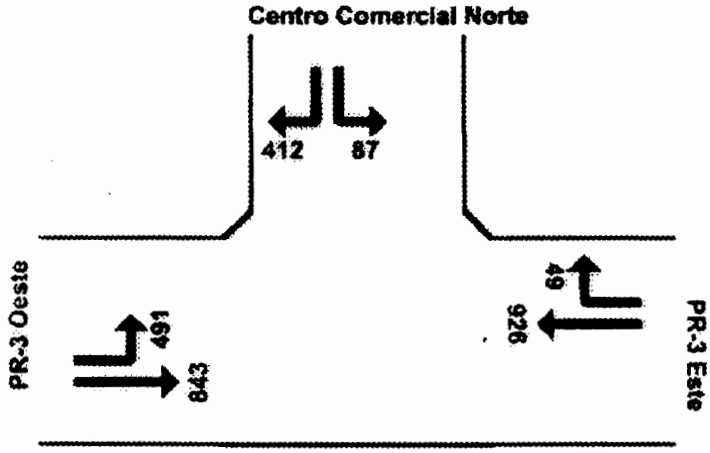

Int. PR-3, Rampa PR-53 & Acceso Villas de Humacao

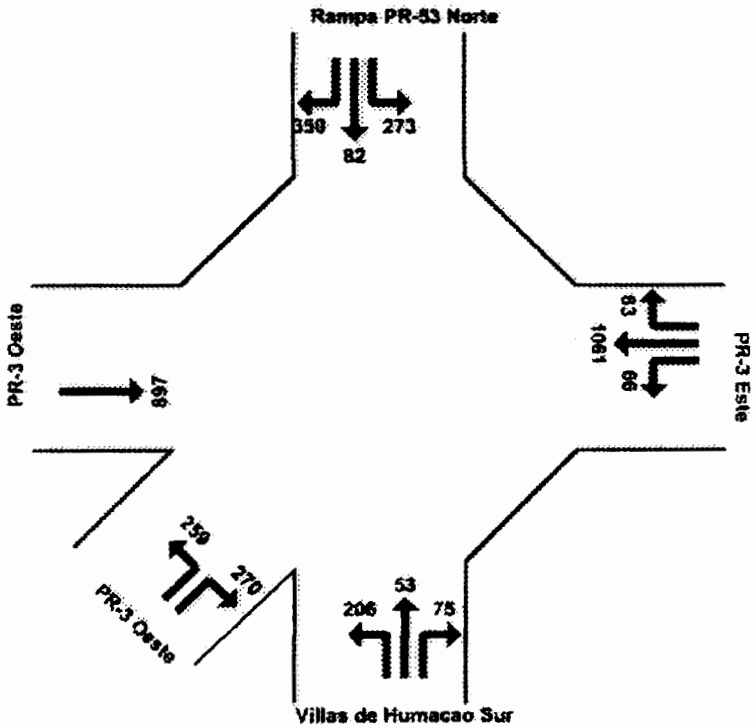

Int. PR-3, PR-925 & Rampa PR-53

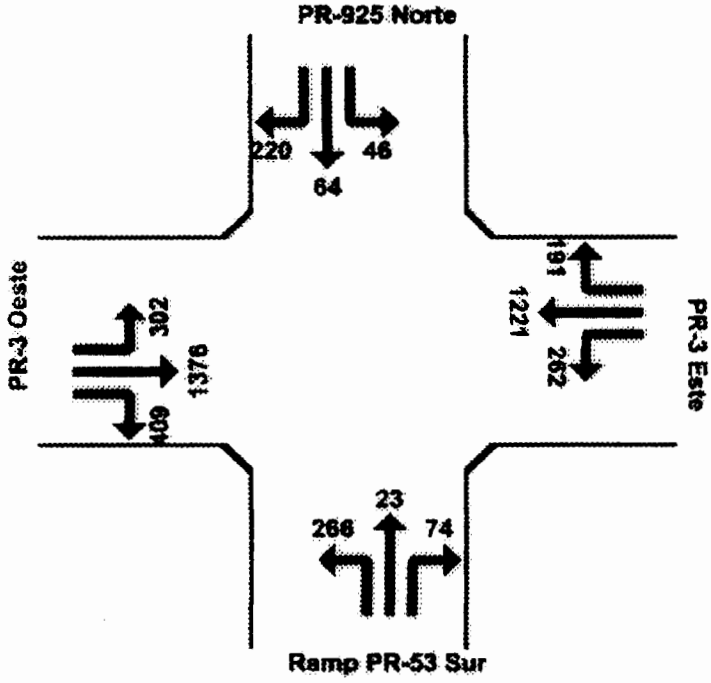

SECCION 3.0

GENERACION DE VIAJES

El tránsito que generará el proyecto propuesto se estimó mediante el uso del programa de "Trip Generation" desarrollado por "Institute of Transportation Engineers" (ver Anejo 2). La Tabla Núm. 1 muestra los viajes a ser generados por el desarrollo propuesto.

Tabla Núm. 1
Viajes Generados

	Hora Pico AM		Hora Pico PM		Total Diario
Uso Residencial	Entran	Salen	Entran	Salen	
Sea View I					
210 unidades Tipos "Walk-UP"	17	90	88	44	1392
92 unidades unifamiliares	18	55	63	36	960
Sea View II					
720 unidades Tipo "Cluster"	58	302	274	137	4450
Total	93	447	425	217	6802

Las figura 6 y 7 muestran la distribución porcentual del tránsito generado por el proyecto.

El tránsito proyectado en las intersecciones, para las horas pico AM y PM se muestra en las figuras 8 y 9 respectivamente.

FIGURA NUM. 6: Distribución porcentual viajes que generado por proyecto, Hora Pico AM

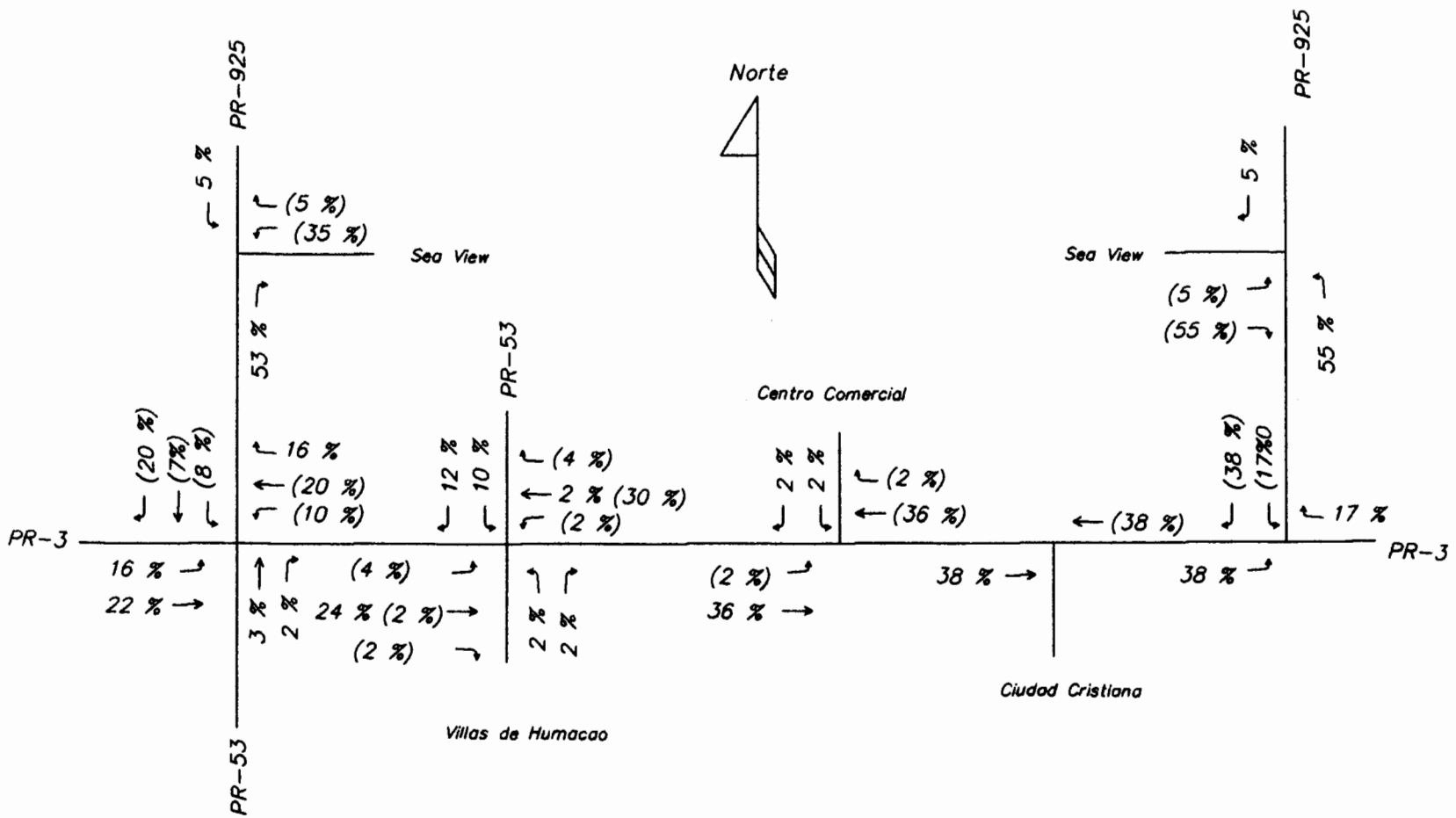

Leyenda

30 % Vehiculos que entran al desarrollo

(30 %) Vehiculos que salen del desarrollo

Dirección del flujo vehicular

FIGURA NUM. 7: Distribución porcentual viajes que generado por proyecto, Hora Pico PM

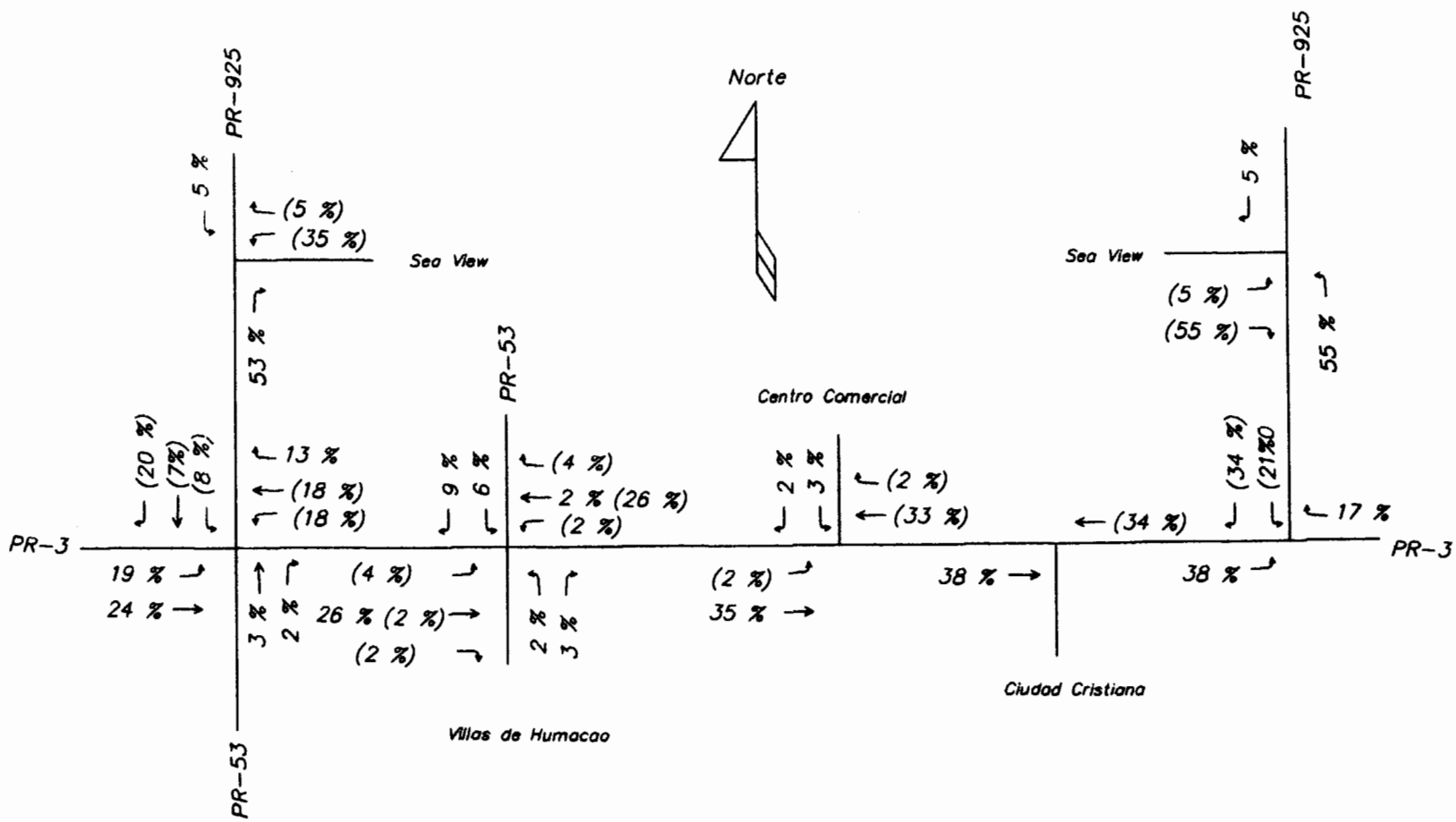

Leyenda

30 % Vehiculos que entran al desarrollo

(30 %) Vehiculos que salen del desarrollo

Dirección del flujo vehicular

Figura Núm. 8: Volúmenes de Tránsito de Hora Pico AM, 2011 Con Proyecto

Intersección PR-925 & PR-3

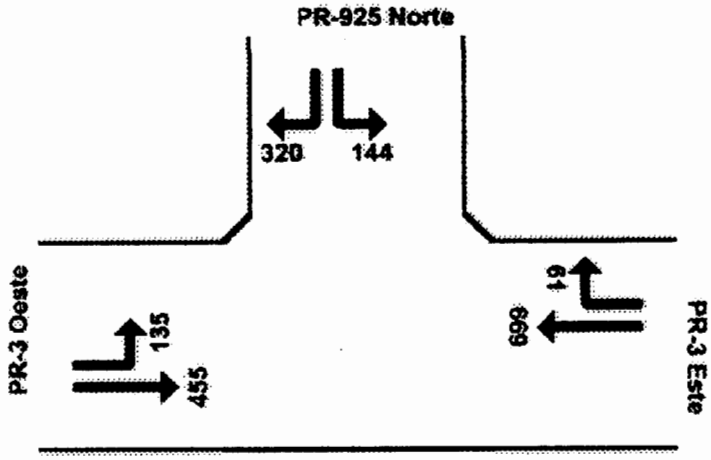

Intersección PR-3 & acceso Ciudad Cristiana

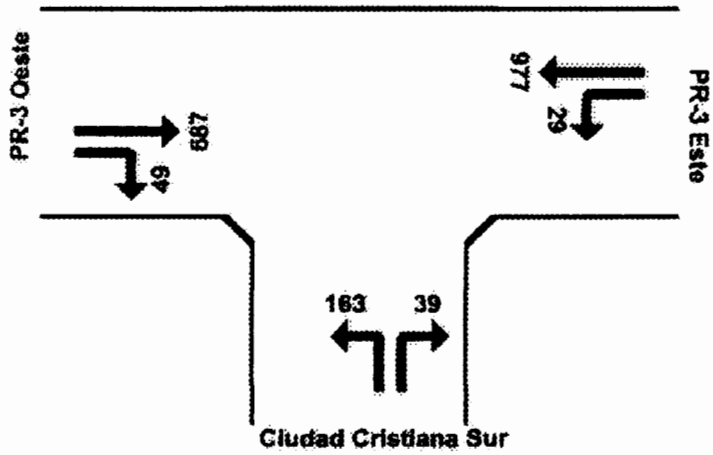

Int. PR-3 & Acceso a Centro Comercial

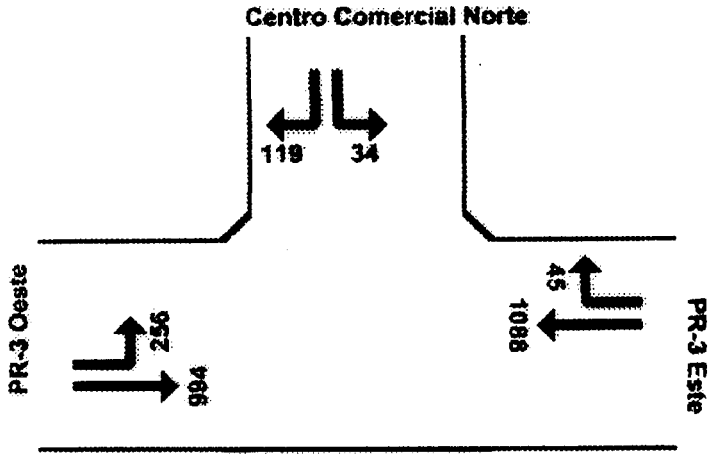

Int. PR-3, Rampa PR-53 & Acceso Villas de Humacao

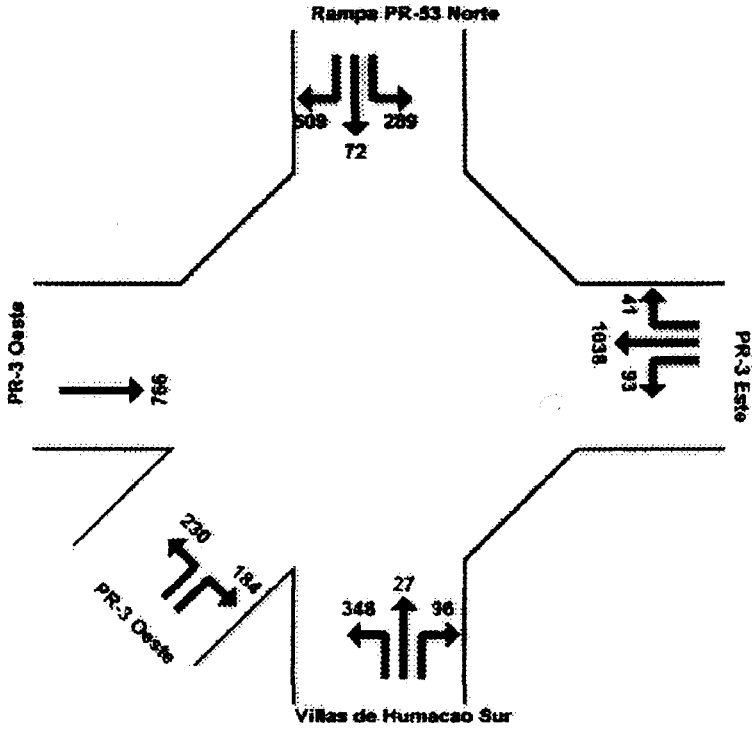

Int. PR-3, PR-925 & Rampa PR-53

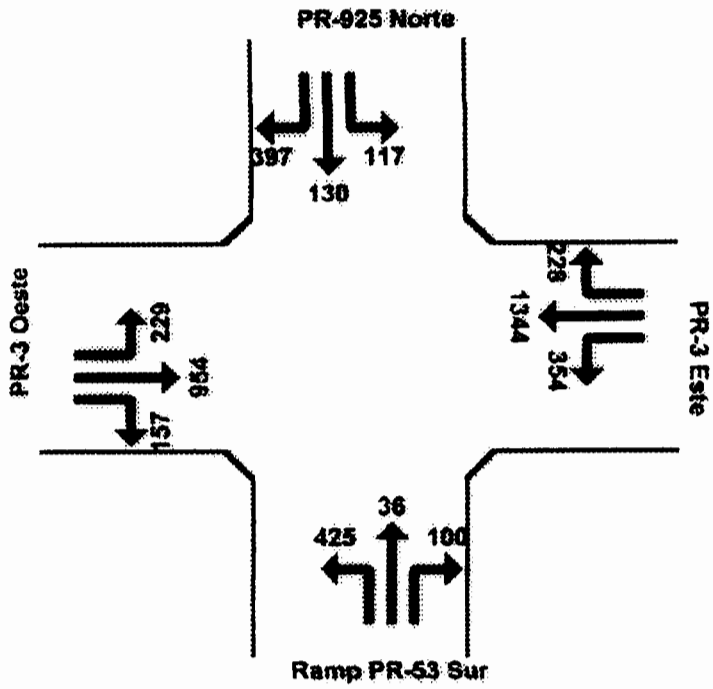

Acceso Este

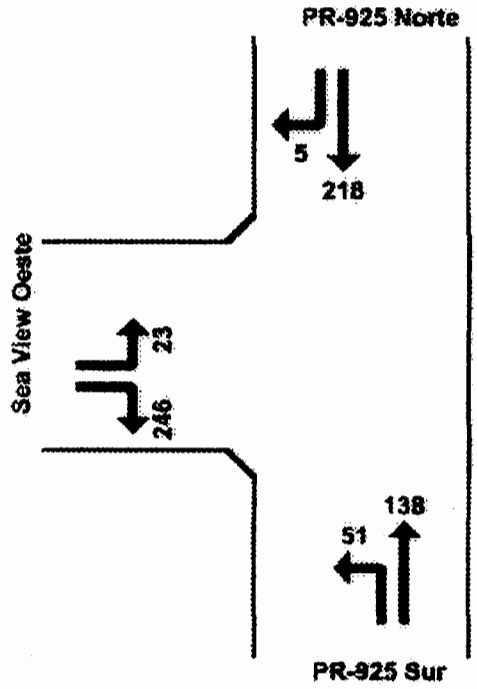

Acceso Oeste

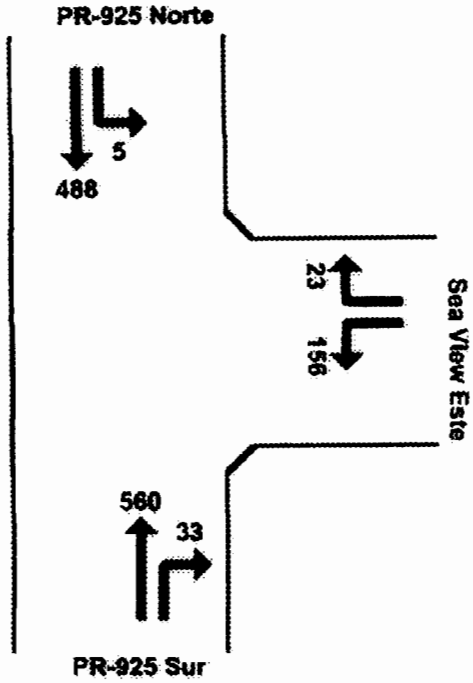

Figura Núm. 9: Volúmenes de Tránsito de Hora Pico PM, 2011 Con Proyecto

Intersección PR-925 & PR-3

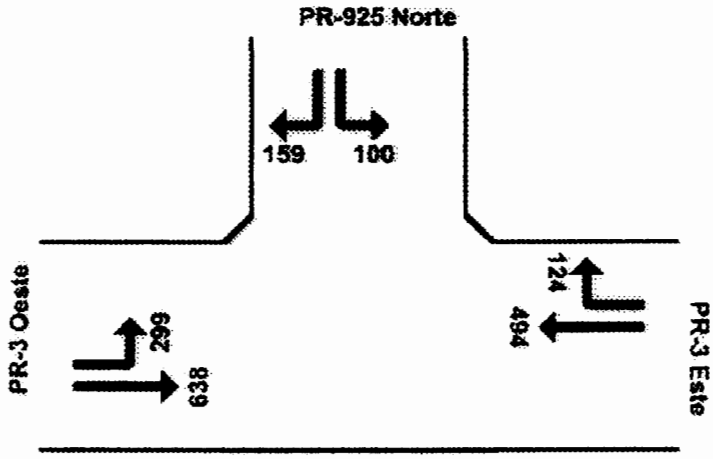

Intersección PR-3 & acceso Ciudad Cristiana

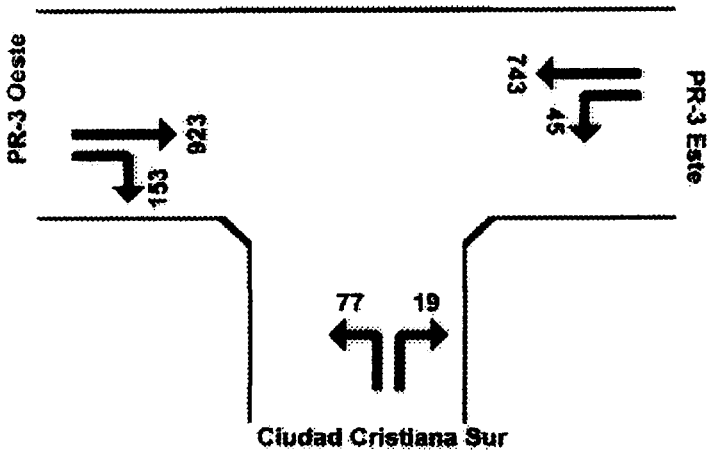

Int. PR-3 & Acceso a Centro Comercial

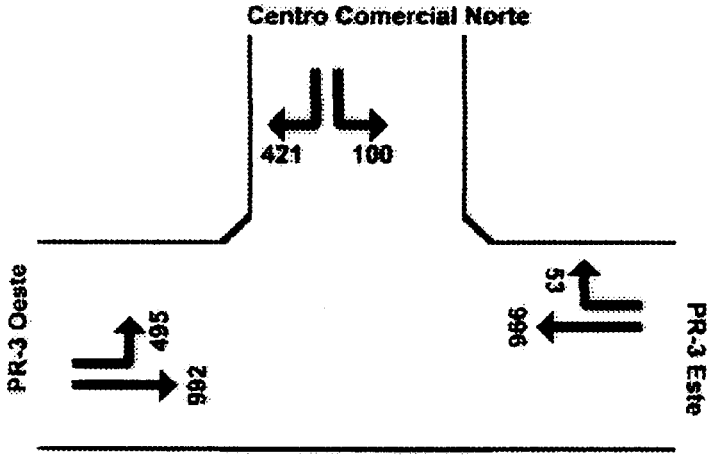

Int. PR-3, Rampa PR-53 & Acceso Villas de Humacao

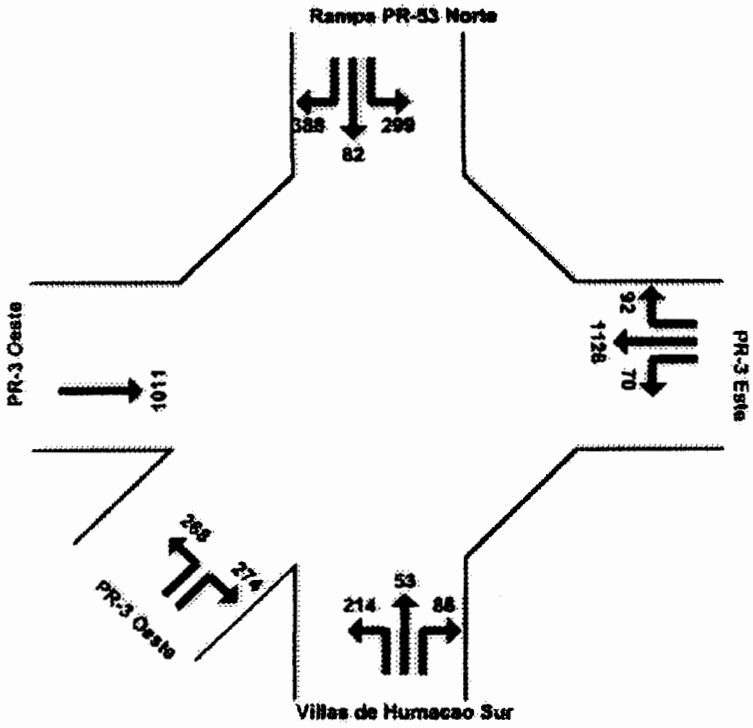

Int. PR-3, PR-925 & Rampa PR-53

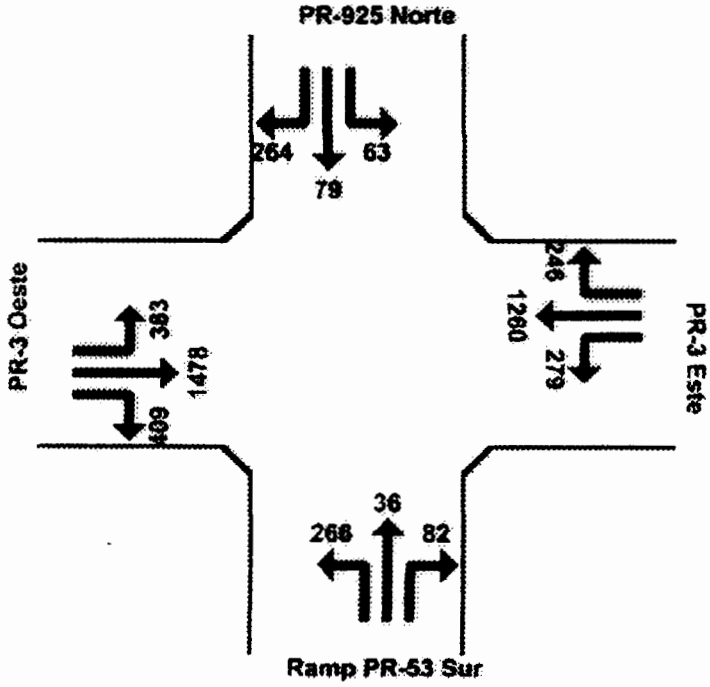

Acceso Este

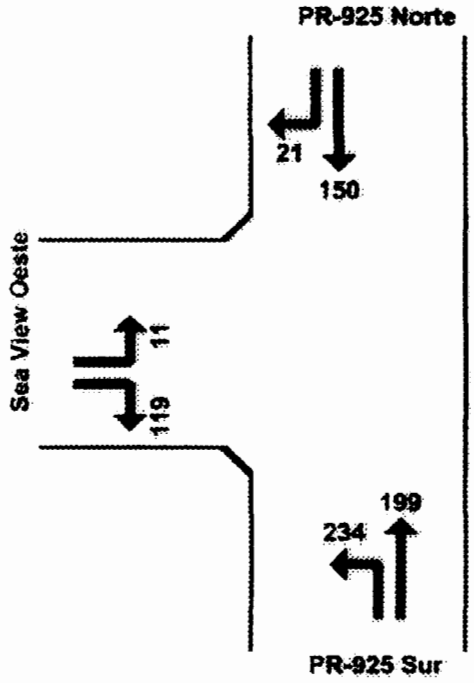

Acceso Oeste

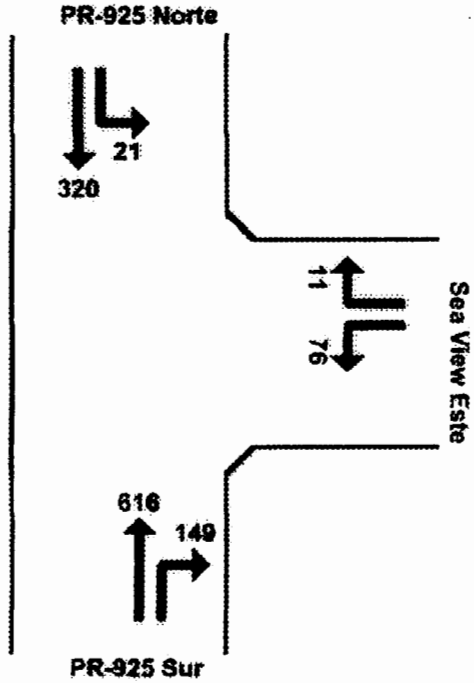

SECCION 4.0

ANALISIS DE TRANSITO

Las condiciones de operación de una carretera o intersección esta representada por su Nivel de Servicio. Los parámetros considerados para determinar Los Niveles de Servicio son el volumen vehicular, la velocidad operacional, y la demora promedio de los vehículos. Los Niveles de Servicio se definen de la siguiente manera:

Nivel de Servicio "A": Excelente

Condición de flujo libre, con bajos volúmenes de tránsito y altas velocidades. Los conductores tienen poca restricción para maniobrar y pueden mantener la velocidad deseada con poca demora.

Nivel de Servicio "B": Muy Bueno

Las velocidades de operación están un poco restringidas por las condiciones del tránsito. Los conductores mantienen una considerable libertad para maniobrar y mantener la velocidad deseada con poca demora.

Nivel de Servicio "C": Bueno

Volúmenes de tránsito más altos controlan las velocidades y la posibilidad de maniobrar. Los conductores tienen restricciones para cambiar de carril, rebasar y mantener la velocidad deseada. Se producen demoras de bajas magnitudes.

Servicios Técnicos Integrados,. Saturno 2070, Urb. Apolo, Guaynabo PR 00969. Tel (787) 790-3854

Nivel de Servicio "D": **Aceptable**

La condición de flujo se acerca a la inestabilidad, con velocidades tolerables mantenidas pero afectadas por los cambios operacionales del tránsito. Los conductores tienen poca libertad para maniobrar. Demoras de magnitudes aceptables.

Nivel de Servicio "E": **Capacidad**

Condición de flujo inestable, con altos volúmenes de tránsito y bajas velocidades. Los conductores tienen muy poca libertad para maniobrar y el flujo puede tener interrupciones momentáneas. Demoras considerables.

Nivel de Servicio "F": **Malo**

Condición de flujo congestionado, la velocidad operacional es muy baja causando grandes demoras.

El Nivel de Servicio de una intersección, esta dado por la demora promedio que sufren los vehículos a causa de la misma.

	Demora promedio (segundos)	
Nivel de Servicio	Sin semáforo	Con semáforo
A	< 10	< 10
B	10.1 – 15	10.1 - 20
C	15.1 – 25	20.1 - 35
D	25.1 – 35	35.1 - 55
E	35.1 – 50	55.1 - 80
F	> 50	> 80

Para evaluar el funcionamiento de la intersecciones afectadas se utilizó el programa "Signalized and Unsignalized Design and Research Aid" (aaSIDRA 2.0). En el análisis se modelaron las intersecciones para las condiciones existentes y proyectadas (ver anejos 3 y 4).

La Tabla Núm. 2 resume los resultados arrojados por el análisis de tránsito, para el año 2009.

Tabla Núm. 2
Resultados Análisis de Tránsito, 2009

Intersecciones	Hora Pico	Demora Promedio [s]	Nivel de Servicio
PR-3, PR-925 & Rampa Oeste de PR-53	AM	42.4	D
	PM	48.5	D
PR-3, Villas de Humacao & Rampa Este de PR-53	AM	55.9	E
	AM	51.0	D
PR-3 & Acceso a Centro Comercial	AM	11.8	B
	PM	17.6	B
PR-3 & Acceso a Ciudad Cristiana	AM	22.5	C
	PM	9.9	A
PR-3 & PR-925	AM	32.0	D
	PM	8.8	A
PR-925 & Acceso Este al Desarrollo	AM	NA	NA
	PM	NA	NA
PR-925 & Acceso Oeste al Desarrollo	AM	NA	NA
	PM	NA	NA

Las figuras 10 y 11 muestran los Niveles de Servicios y las Demoras Promedio de las intersecciones durante las Horas Pico AM y PM del respectivamente, para el año 2009.

La Tabla Núm. 2Aresume los resultados arrojados por el análisis de tránsito, para el año 2011 .

Tabla Núm. 2A Resultados Análisis de Tránsito, 2011					
		Demoras		Niveles de Servicio	
Intersecciones	Hora Pico	Sin Proyecto [s]	Con Proyecto [s]	Sin Proyecto [s]	Con Proyecto [s]
PR-3, PR-925 & Rampa oeste de PR-53	AM	56.7	51.9	E	D
	PM	52.2	64.1	D	E
PR-3, Villas de Humacao & Rampa Este de PR-53	AM	60.0	64.3	E	E
	AM	53.6	61.0	D	E
PR-3 & Acceso a Centro Comercial	AM	11.8	13.0	B	B
	PM	18.9	20.0	B	B
PR-3 & Acceso a Ciudad Cristiana	AM	22.5	22.1	C	C
	PM	7.3	9.7	A	A
PR-3 & PR-925	AM	38.9	11.3	E	B
	PM	10.0	13.3	A	B
PR-925 & Acceso Este al Desarrollo	AM	NA	5.3	NA	A
	PM	NA	5.3	NA	A
PR-925 & Acceso Oeste al Desarrollo	AM	NA	9.5	NA	A
	PM	NA	4.4	NA	A

Las figuras 12 y 13 muestran los Niveles de Servicios y las Demoras Promedio de las intersecciones durante las Horas Pico AM y PM del respectivamente, para el año 2011 sin proyecto.

Las figuras 14 y 15 muestran los Niveles de Servicios y las Demoras Promedio de las intersecciones durante las Horas Pico AM y PM del respectivamente, para el año 2011 sin proyecto.

Figura Núm. 10: Niveles de Servicio y Demoras Promedio. Hora Pico AM, 2009

Intersección PR-925 & PR-3

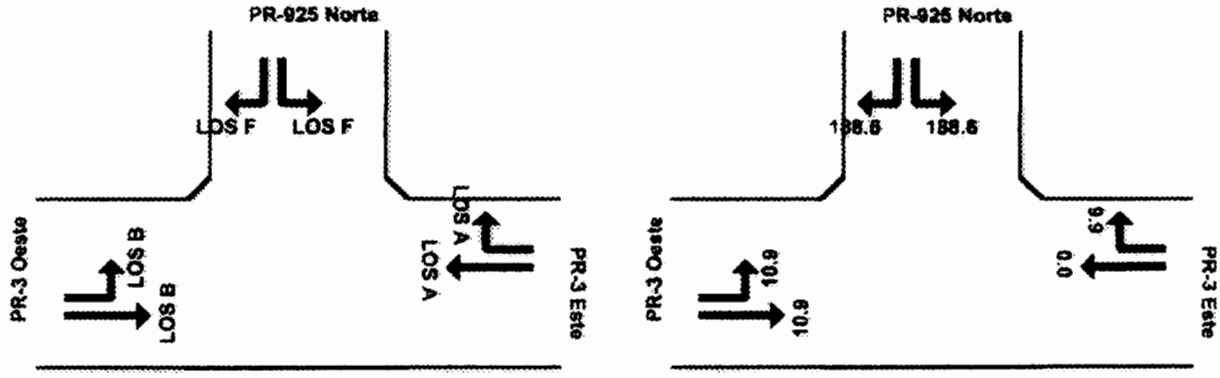

Intersección PR-3 & acceso Ciudad Cristiana

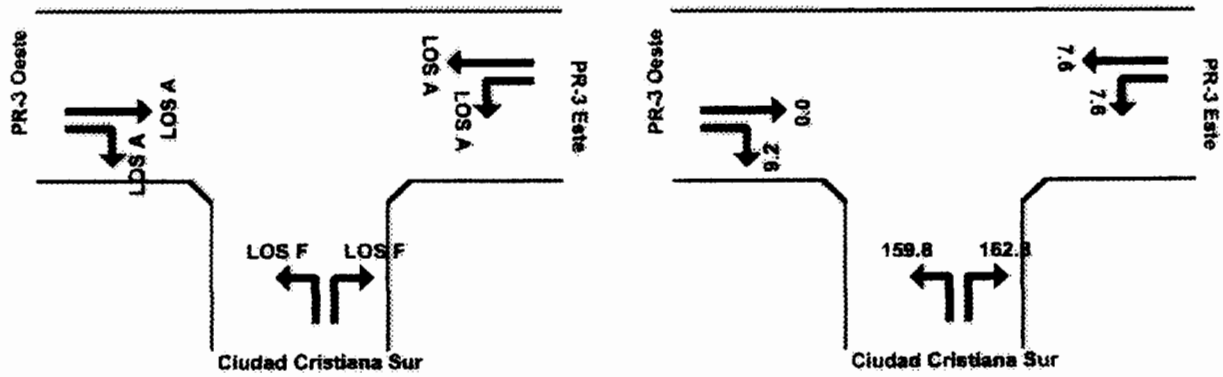

Int. PR-3 & Acceso a Centro Comercial

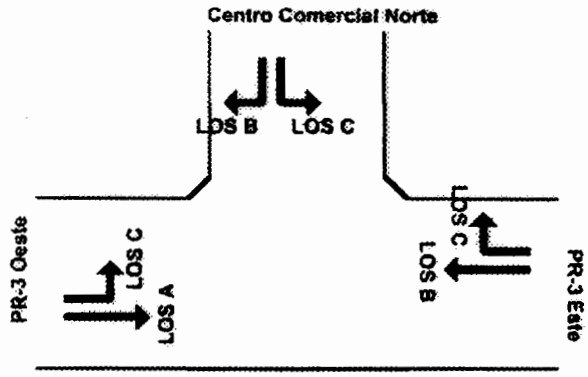

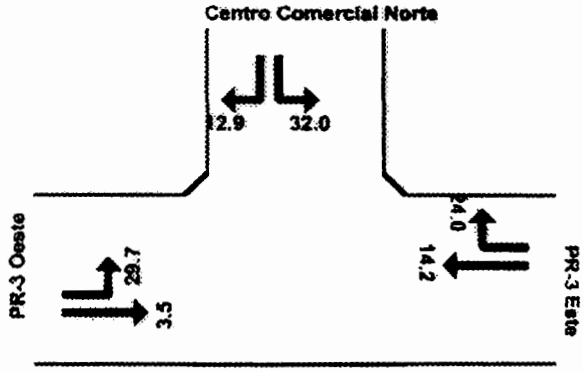

Int. PR-3, Rampa PR-53 & Acceso Villas de Humacao

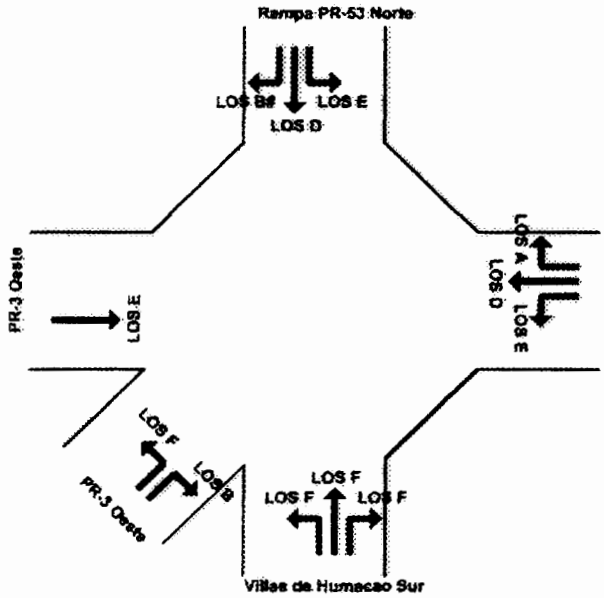

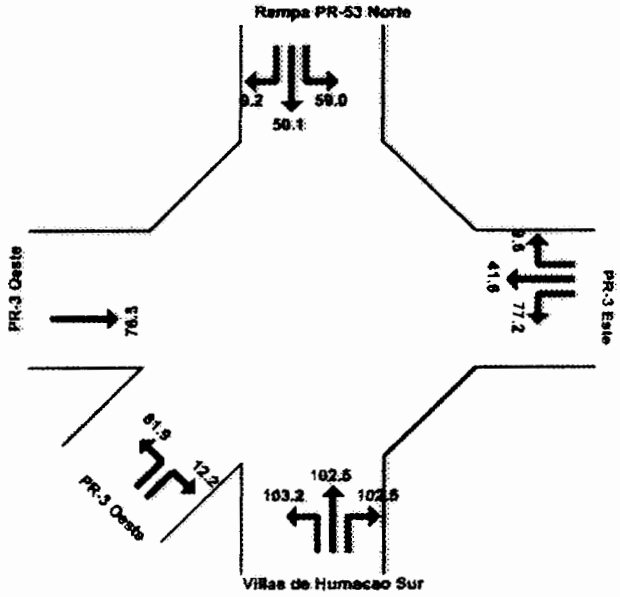

Int. PR-3, PR-925 & Rampa PR-53

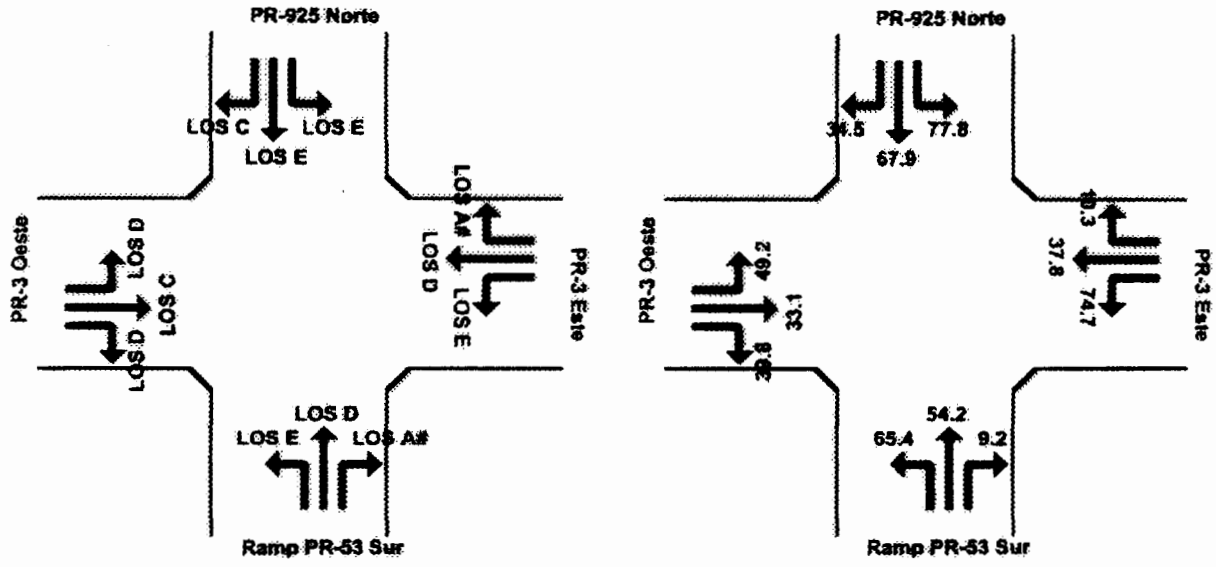

Figura Núm. 11: Niveles de Servicio y Demoras Promedio. Hora Pico PM, 2009

Intersección PR-925 & PR-3

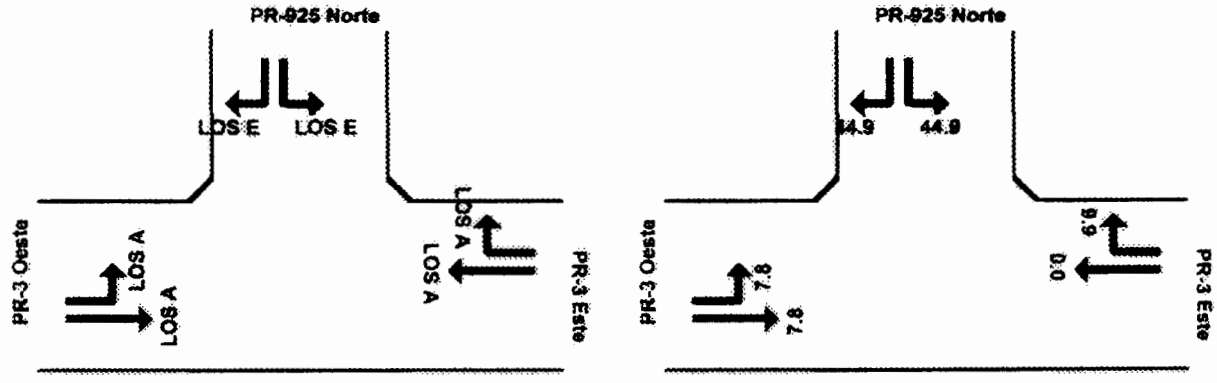

Intersección PR-3 & acceso Ciudad Cristiana

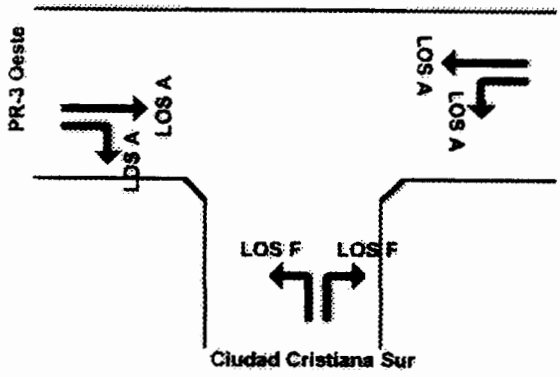

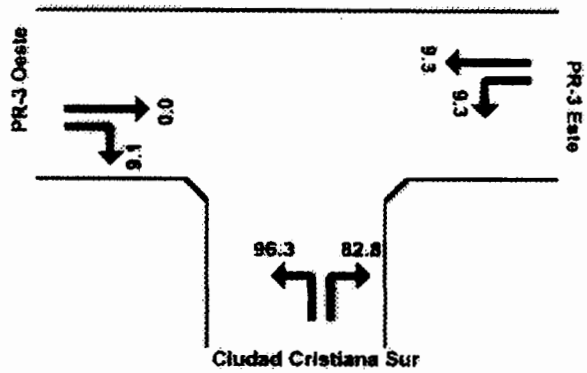

Int. PR-3 & Acceso a Centro Comercial

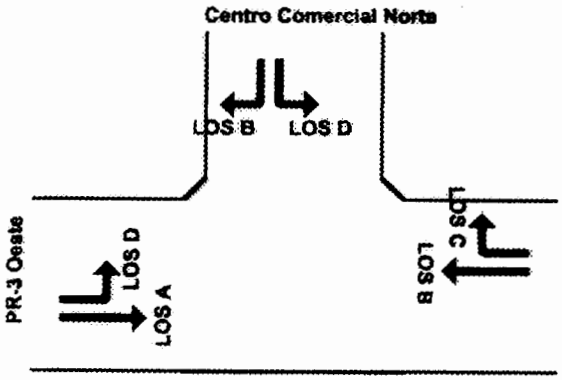

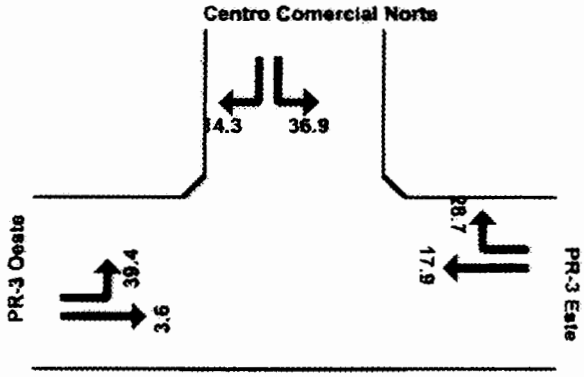

Int. PR-3, Rampa PR-53 & Acceso Villas de Humacao

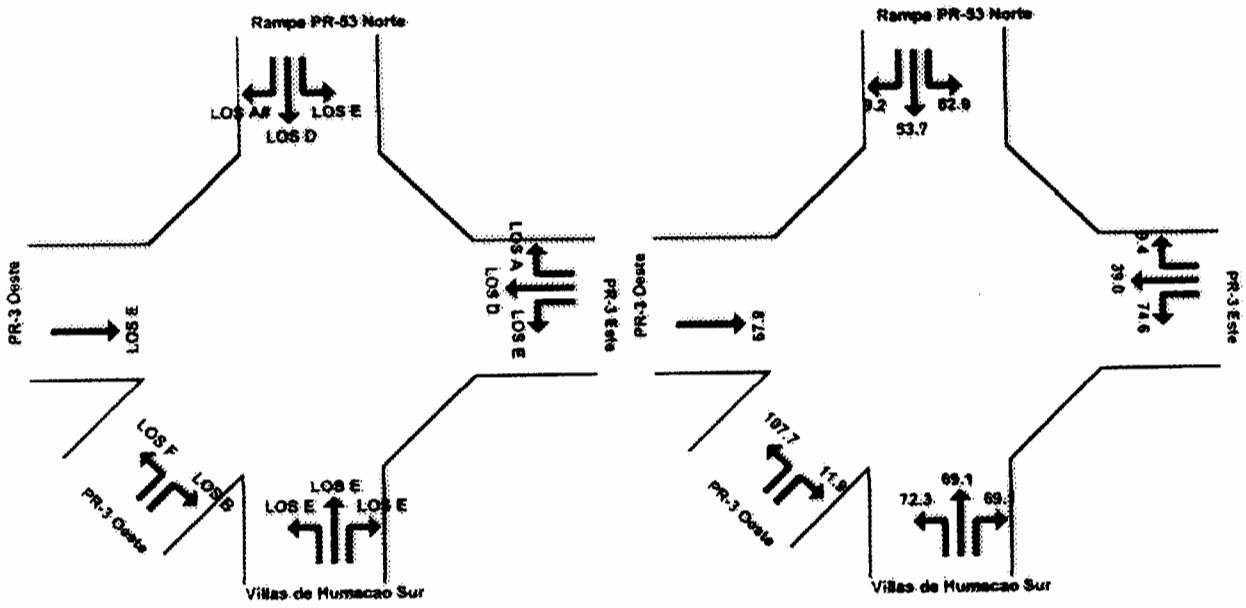

Int. PR-3, PR-925 & Rampa PR-53

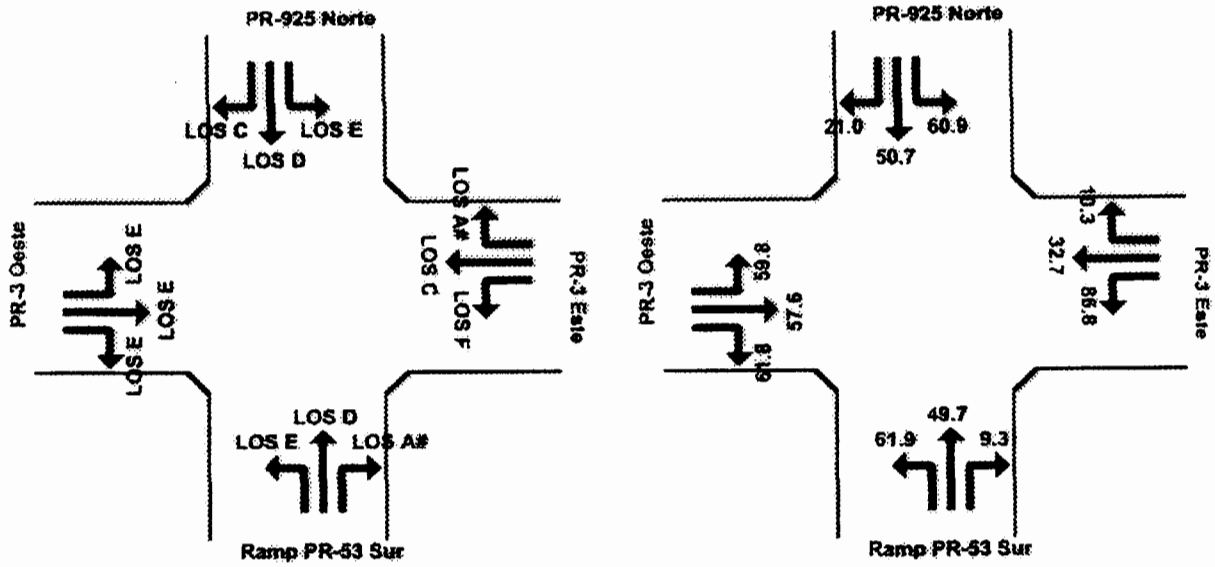

Figura Núm. 12: Niveles de Servicio. y Demoras Promedio Hora Pico AM, 2011 Sin proyecto.

Intersección PR-925 & PR-3

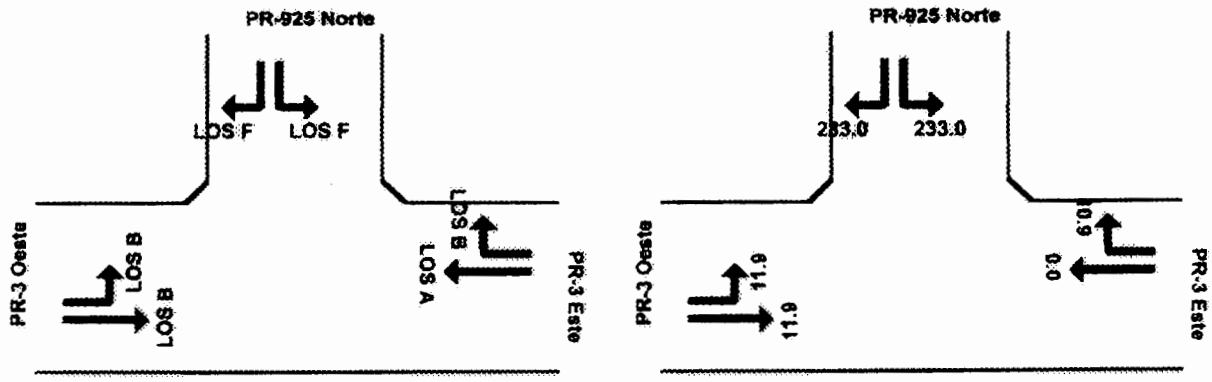

Intersección PR-3 & acceso Ciudad Cristiana

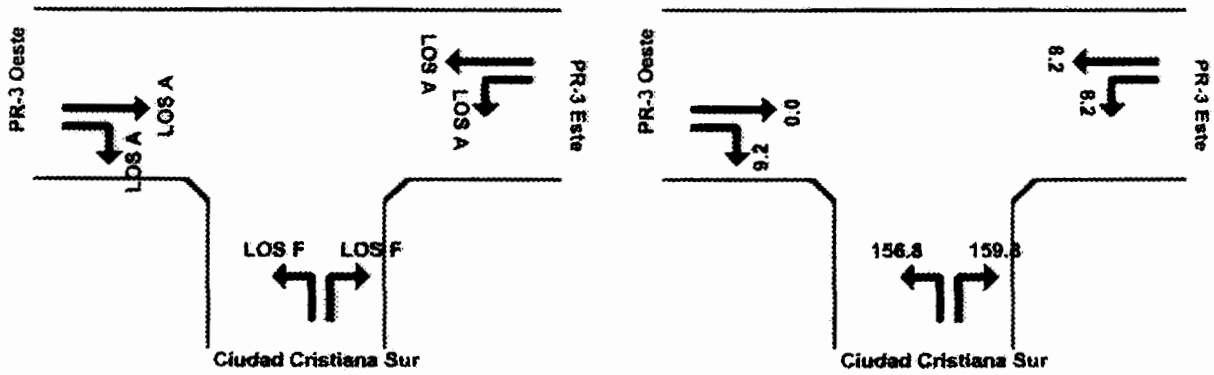

Int. PR-3 & Acceso a Centro Comercial

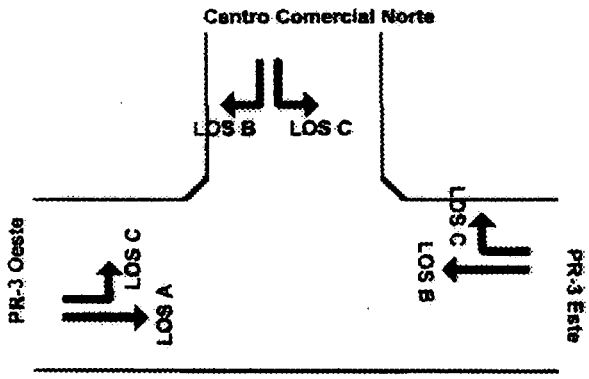

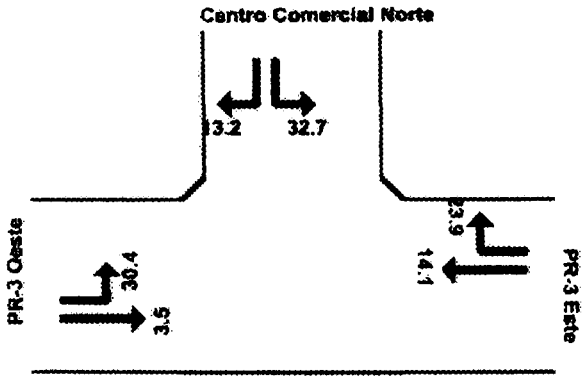

Int. PR-3, Rampa PR-53 & Acceso Villas de Humacao

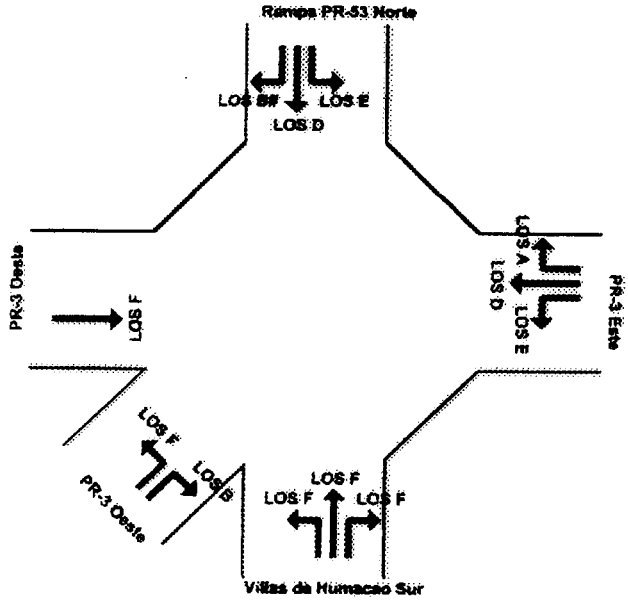

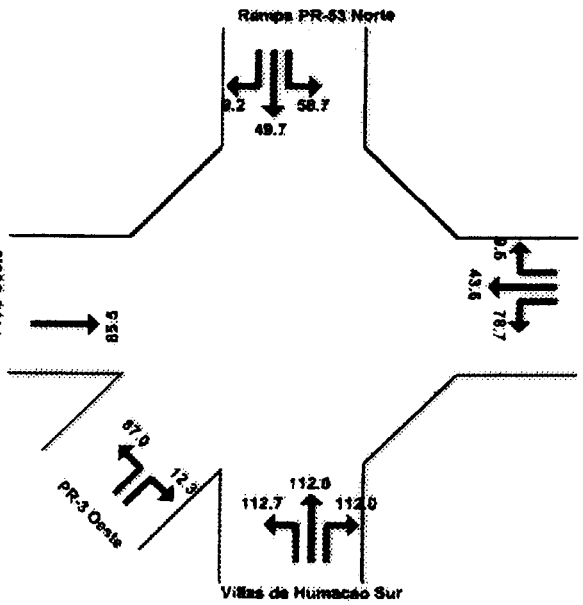

Int. PR-3, PR-925 & Rampa PR-53

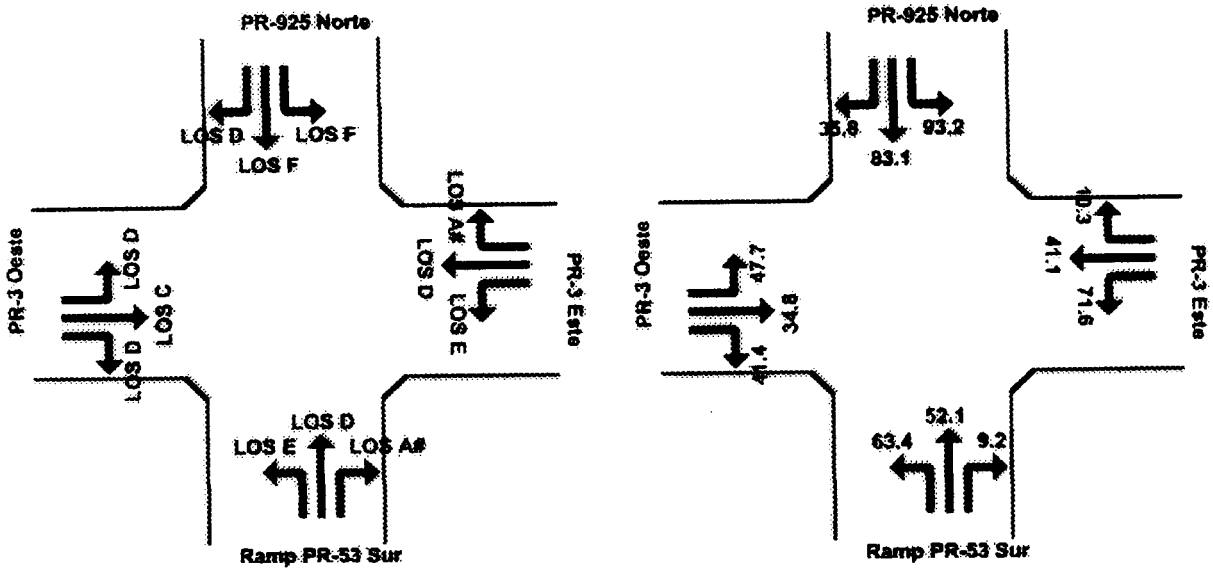

Figura Núm. 13: Niveles de Servicio y Demoras Promedio. Hora Pico PM, 2011 Sin Proyecto

Intersección PR-925 & PR-3

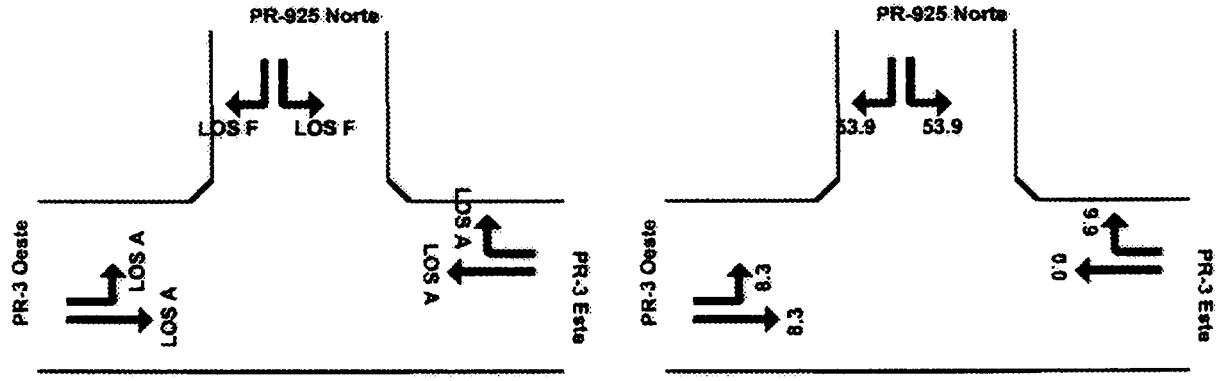

Intersección PR-3 & acceso Ciudad Cristiana

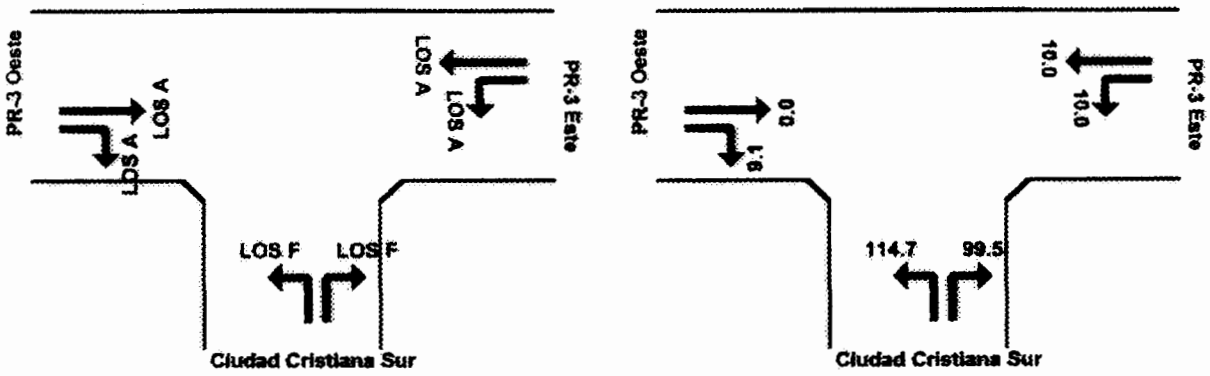

Int. PR-3 & Acceso a Centro Comercial

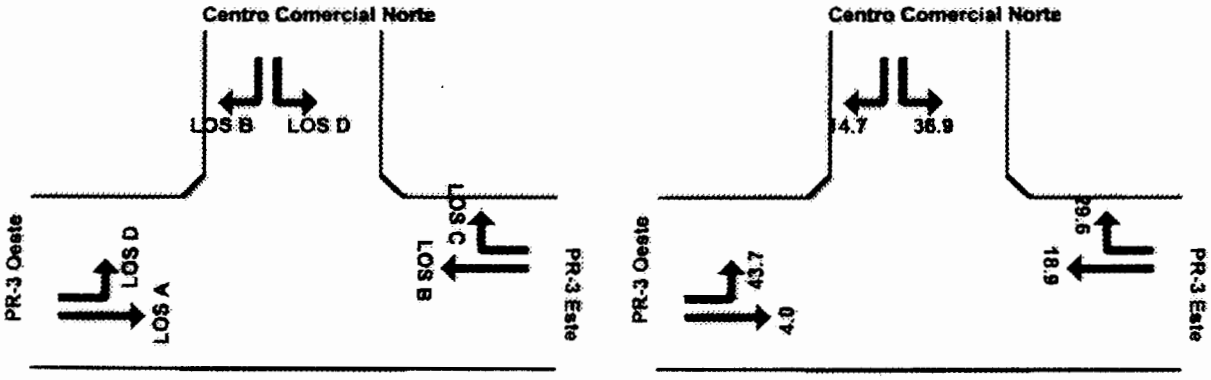

Int. PR-3, Rampa PR-53 & Acceso Villas de Humacao

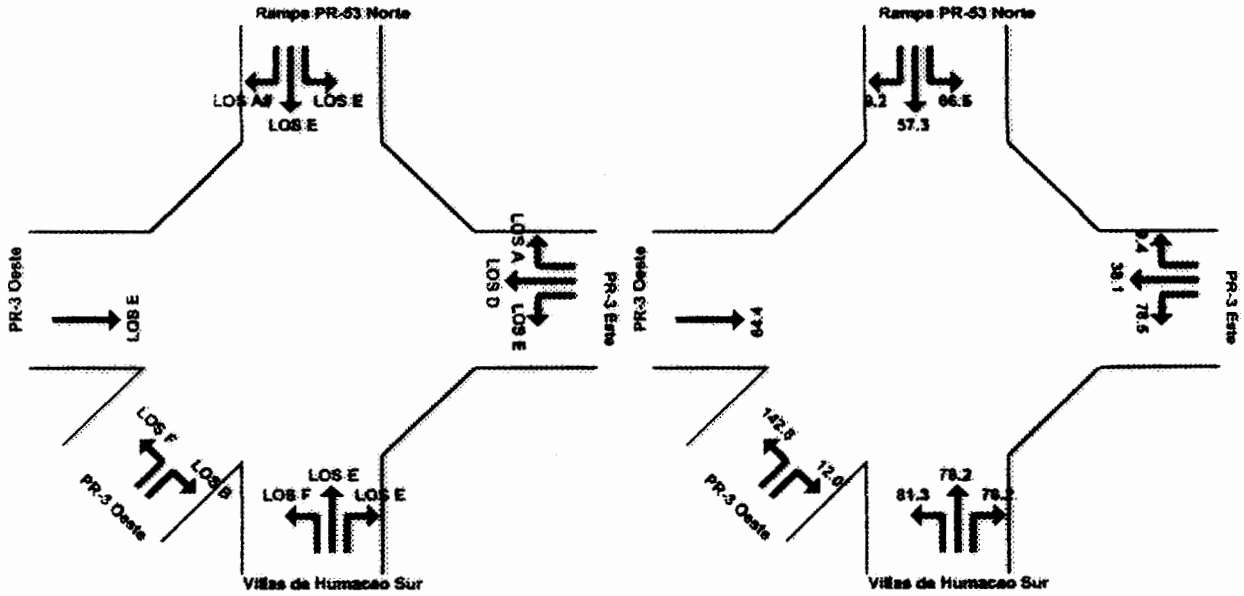

Int. PR-3, PR-925 & Rampa PR-53

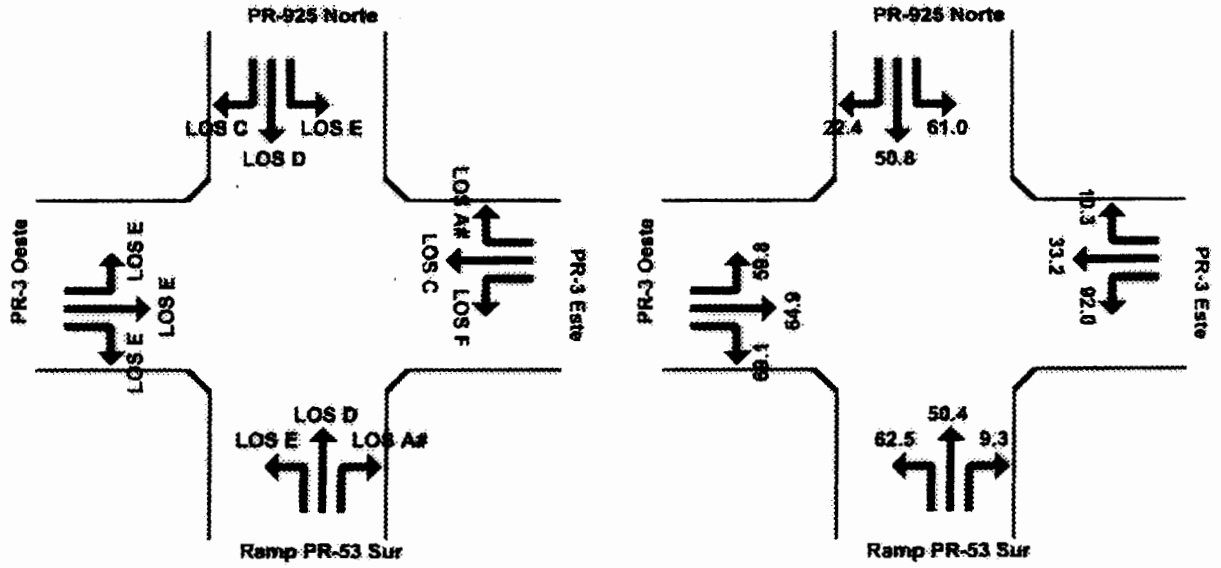

Figura Núm. 14: Niveles de Servicio. y Demoras Promedio Hora Pico AM, 2011 Con proyecto

Intersección PR-925 & PR-3

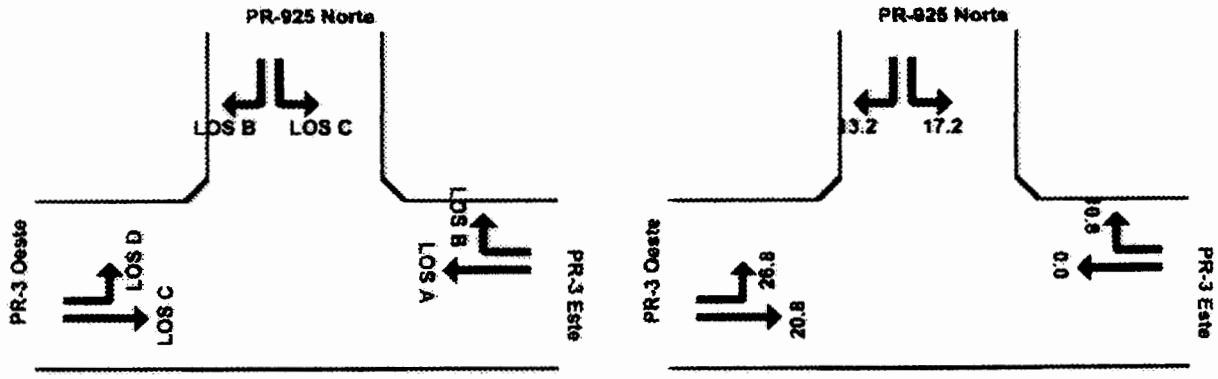

Intersección PR-3 & acceso Ciudad Cristiana

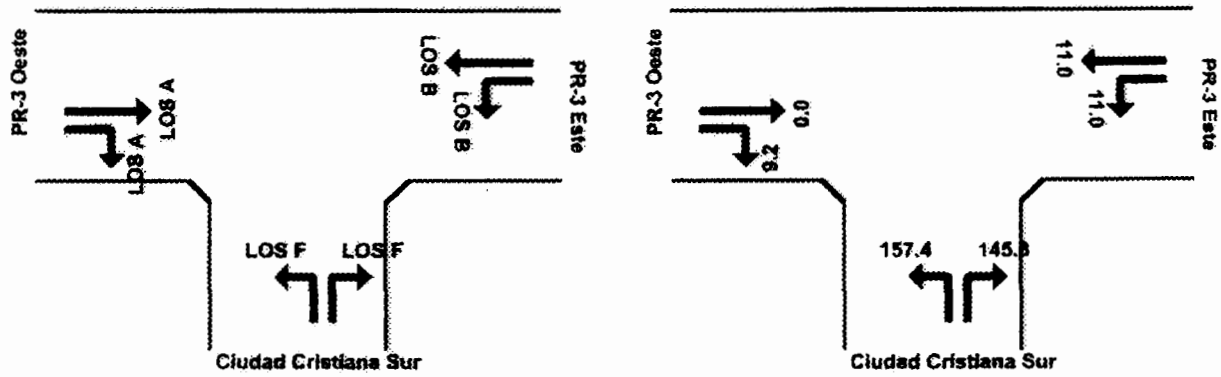

Int. PR-3 & Acceso a Centro Comercial

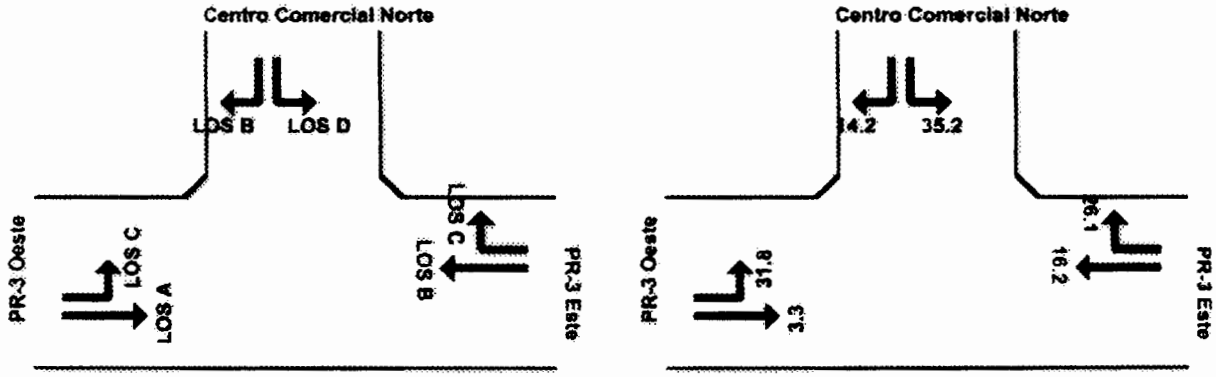

Int. PR-3, Rampa PR-53 & Acceso Villas de Humacao

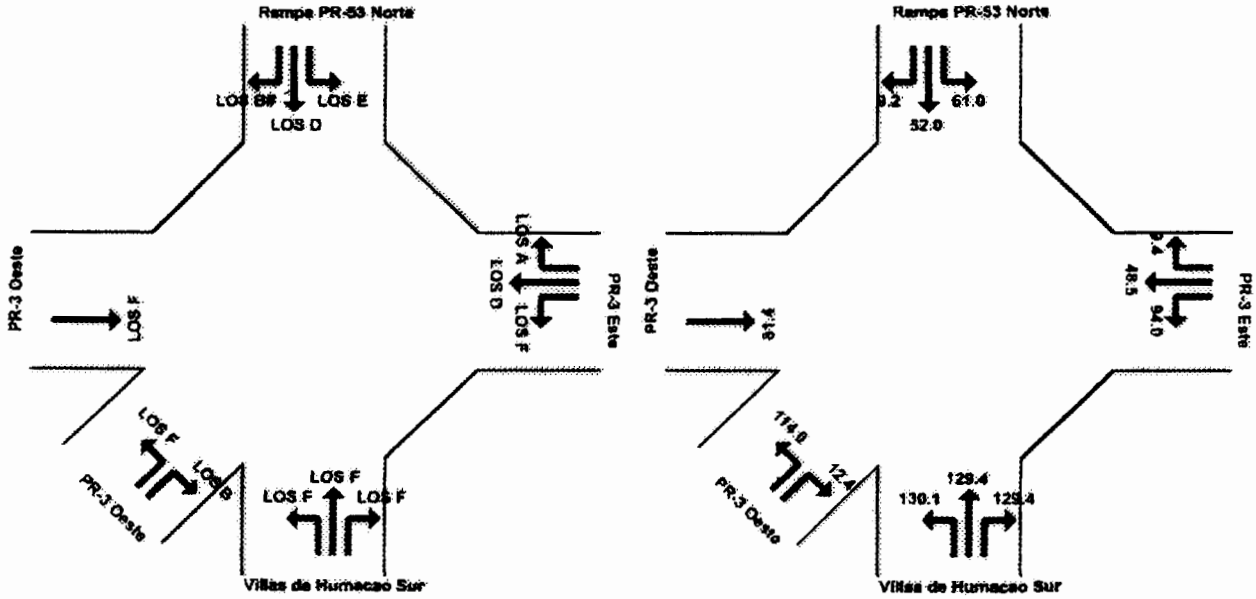

Int. PR-3, PR-925 & Rampa PR-53

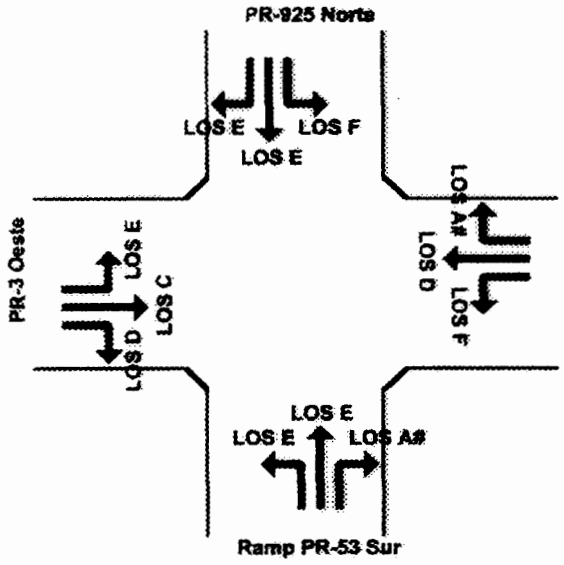

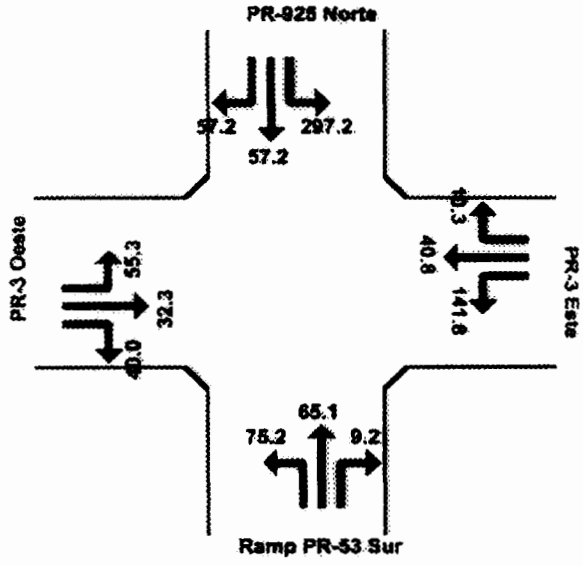

Acceso Este

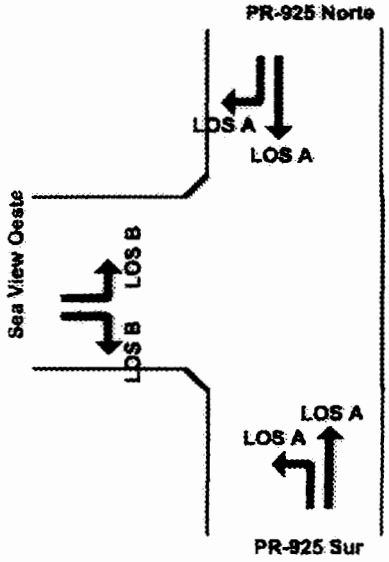

Acceso Oeste

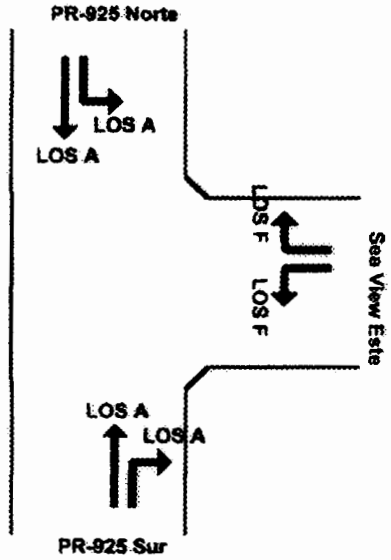

Figura Núm. 15: Niveles de Servicio y Demoras Promedio. Hora Pico PM, 2011 Con Proyecto

Intersección PR-925 & PR-3

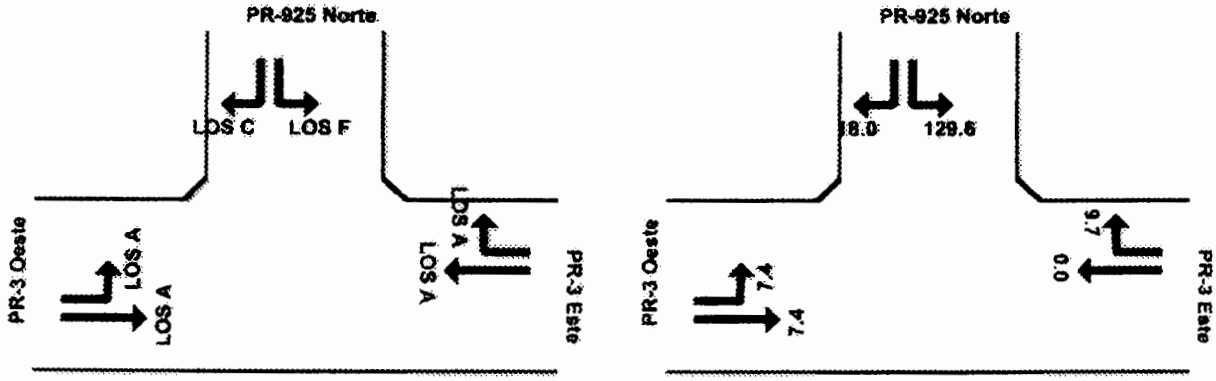

Intersección PR-3 & acceso Ciudad Cristiana

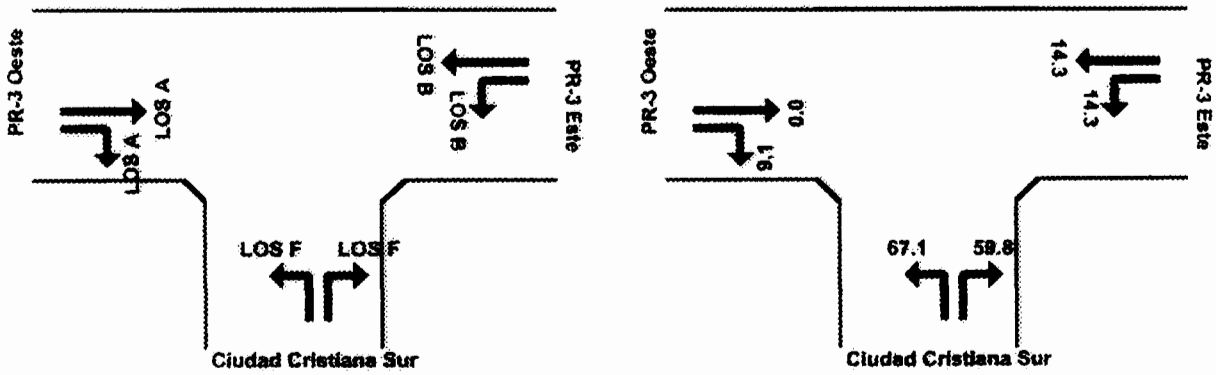

Int. PR-3 & Acceso a Centro Comercial

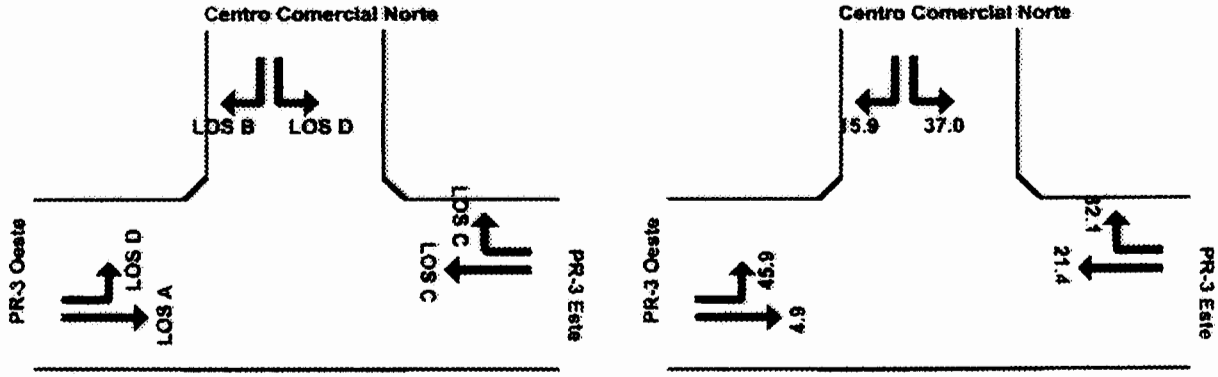

Int. PR-3, Rampa PR-53 & Acceso Villas de Humacao

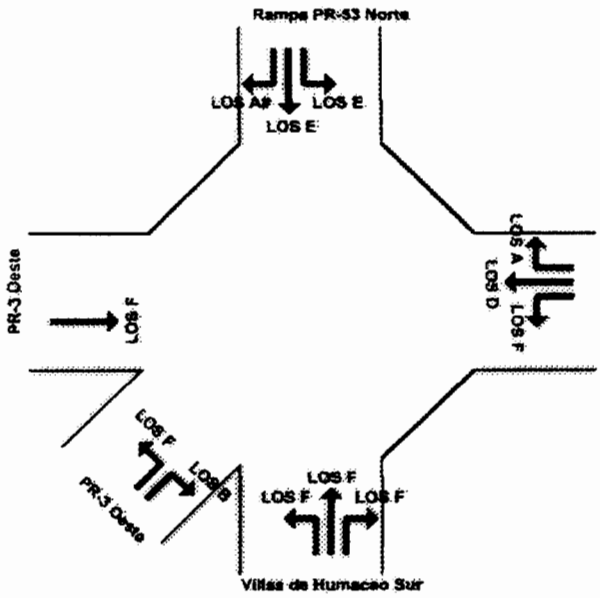

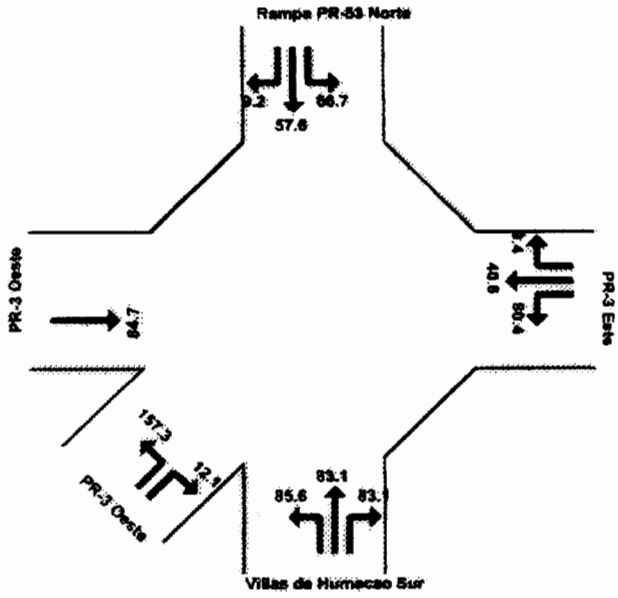

Int. PR-3, PR-925 & Rampa PR-53

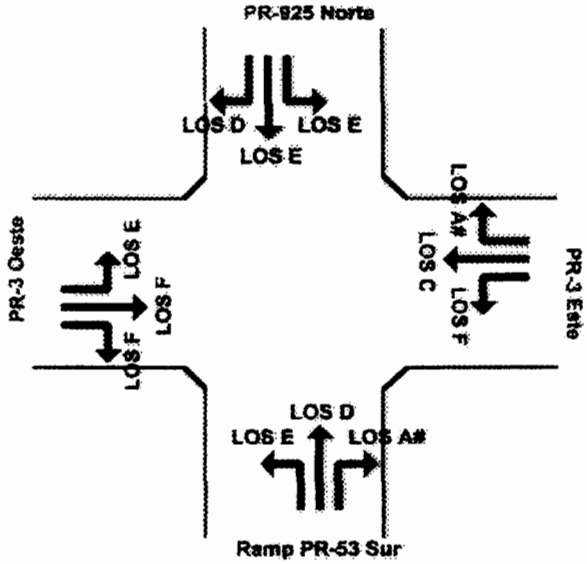

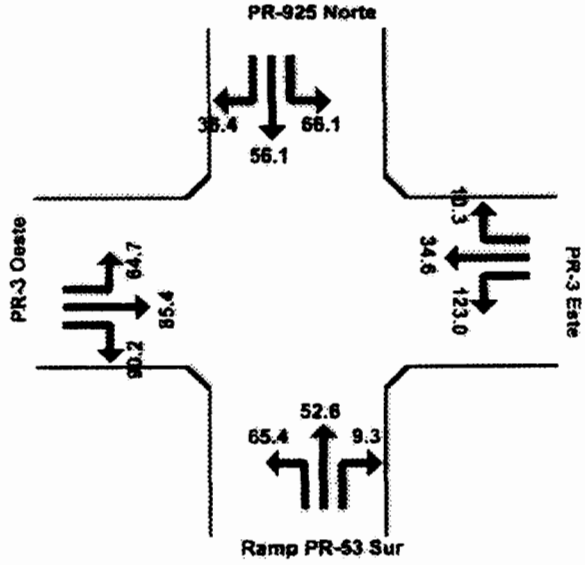

Acceso Este

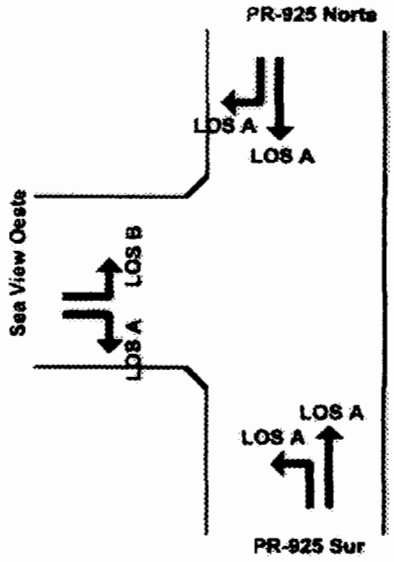

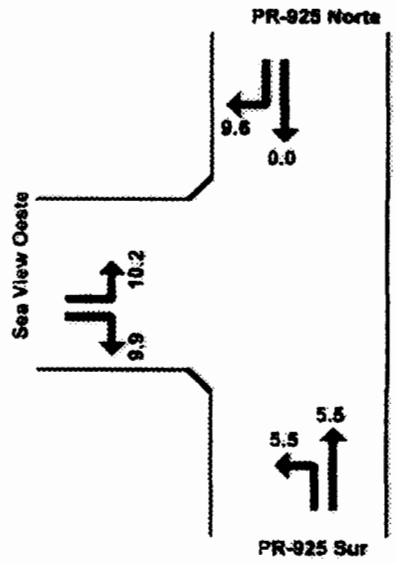

Acceso Oeste

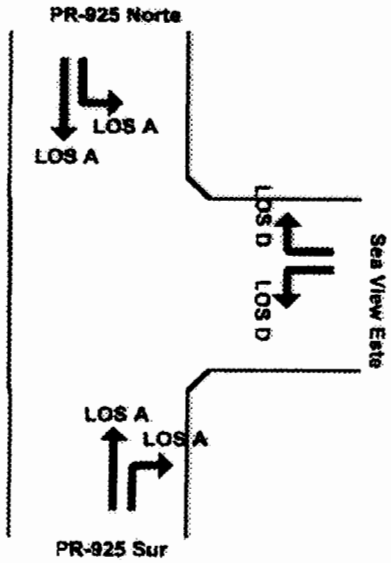

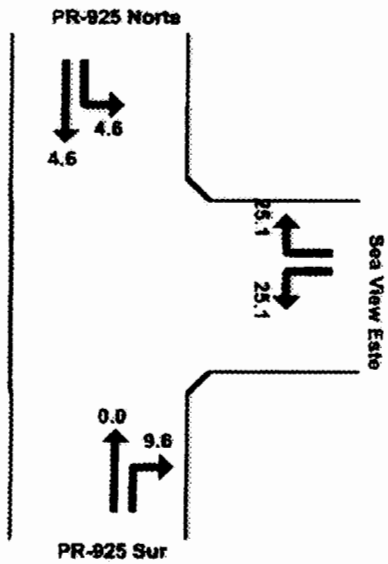

SECCION 5.0

CONCLUSIONES

Basándonos en los resultados obtenidos de este estudio se puede llegar a las siguientes conclusiones:

1- El tránsito que generará el proyecto propuesto, no impactará de forma significativa el funcionamiento de las carreteras estatales PR-3 & PR-925.

2- Las vías e intersecciones estudiadas mantendrán niveles de servicio similares a los actuales, a excepción de la intersección de las carreteras PR-3 & PR-925 a la cual deberán realizárseles mejoras para mitigar el impacto del desarrollo propuesto.

3- El aumento en las demoras de la carretera PR-3 a causa del tránsito generado por el proyecto propuesto no es significativo.

4- La intersecciones propuestas de acceso al desarrollo son apropiadas ya que las mismas funcionarán a Niveles de Servicio "A" durante las horas pico AM y PM.

Por lo tanto el desarrollo propuesto no tendrá impacto significativo en el tránsito vehicular del área y recomendamos la construcción de los accesos al proyecto según propuestos y las mejoras propuestas a la intersección de las carreteras PR-3 & PR-925.

Francisco Reyes
Planificador Urbano
Licencia Núm. 336

Servicios Técnicos Integrados,. Saturno 2070, Urb. Apolo, Guaynabo PR 00969. Tel (787) 790-3854

ANEJOS

ANEJO 1
CONTEOS DE TRANSITO

Sa... ..ew II
Conteo Vehicular (12 Horas)

FECHA: 23-Mar-09
INTERSECCION: PR-3, Rampa PR-53 & PR-925
NOMBRE: F. REYES

HORA	PR-925 NORTE IZQUIERDA LIVIANOS	PR-925 NORTE IZQUIERDA PESADOS	PR-925 NORTE RECTO LIVIANOS	PR-925 NORTE RECTO PESADOS	PR-925 NORTE DERECHA LIVIANOS	PR-925 NORTE DERECHA PESADOS	PR-3 ESTE IZQUIERDA LIVIANOS	PR-3 ESTE IZQUIERDA PESADOS	PR-3 ESTE RECTO LIVIANOS	PR-3 ESTE RECTO PESADOS	PR-3 ESTE DERECHA LIVIANOS	PR-3 ESTE DERECHA PESADOS	RAMPA PR-53 SUR IZQUIERDA LIVIANOS	RAMPA PR-53 SUR IZQUIERDA PESADOS	RAMPA PR-53 SUR RECTO LIVIANOS	RAMPA PR-53 SUR RECTO PESADOS	RAMPA PR-53 SUR DERECHA LIVIANOS	RAMPA PR-53 SUR DERECHA PESADOS	PR-3 OESTE IZQUIERDA LIVIANOS	PR-3 OESTE IZQUIERDA PESADOS	PR-3 OESTE RECTO LIVIANOS	PR-3 OESTE RECTO PESADOS	PR-3 OESTE DERECHA LIVIANOS	PR-3 OESTE DERECHA PESADOS	SUMA TOTAL LIVIANOS	SUMA TOTAL PESADOS	SUMA TOTAL LIVIANOS	SUMA TOTAL PESADOS
3:00 - 3:15	7	1	15	0	58	0	64	4	226	4	39	1	74	0	7	1	16	0	56	4	316	4	79	2	957	21	3516	54
3:15 - 3:30	12	0	14	0	62	1	71	4	299	7	52	1	74	2	5	1	25	2	60	6	319	2	78	6	1071	32	3725	75
3:30 - 3:45	10	0	18	1	50	0	88	1	350	0	52	0	82	0	6	1	13	2	83	11	375	7	97	1	1224	24	4057	88
3:45 - 4:00	9	0	14	0	50	0	63	3	274	5	40	0	55	1	3	0	15	0	70	2	306	4	112	2	1011	17	4263	94
4:00 - 4:15	13	2	17	0	57	0	62	0	284	2	46	0	50	2	7	0	17	0	62	8	363	0	112	1	1090	15	4396	88
4:15 - 4:30	14	2	21	0	42	0	97	0	275	1	45	1	59	0	7	0	20	2	71	2	319	2	75	0	1045	10	4370	66
4:30 - 4:45	22	0	18	1	53	0	98	1	288	4	33	0	62	2	6	1	27	2	74	0	324	1	84	1	1089	13	4235	55
4:45 - 5:00	19	0	21	0	44	0	100	1	296	1	64	2	55	2	0	0	15	0	73	4	349	6	107	0	1143	16	4367	54
5:00 - 5:15	28	0	33	0	65	1	116	5	246	4	41	1	57	0	7	0	28	1	76	0	326	4	118	0	1141	16	4418	55
5:15 - 5:30	13	0	15	1	48	0	65	3	282	1	29	1	55	1	8	0	6	2	68	0	298	2	94	0	981	11	4354	56
5:30 - 5:45	28	1	27	0	63	0	85	1	256	3	34	1	46	1	1	0	19	0	76	0	375	4	90	1	1100	12	4365	55
5:45 - 6:00	25	0	24	0	60	0	73	2	273	3	29	0	49	2	3	0	14	1	50	1	320	1	64	0	984	10	4206	49
HORA PICO 7:15 - 8:15	80	1	96	3	308	2	288	11	1233	22	211	2	422	3	32	1	96	2	211	3	901	33	155	1	TOTALES HORA PICO		4041	84
																									FACTOR HORA PICO (PHF)		0.88	
HORA PICO 3:15 - 4:15	44	2	63	1	219	1	284	8	1207	14	190	1	261	5	21	2	70	4	276	27	1363	13	399	10	TOTALES HORA PICO		4396	88
																									FACTOR HORA PICO (PHF)		0.90	
HORA PICO 11:45 - 12:45	49	0	51	3	227	3	212	7	878	7	111	2	303	0	17	1	80	1	194	7	1088	11	257	4	TOTALES HORA PICO		3467	46
																									FACTOR HORA PICO (PHF)		0.97	

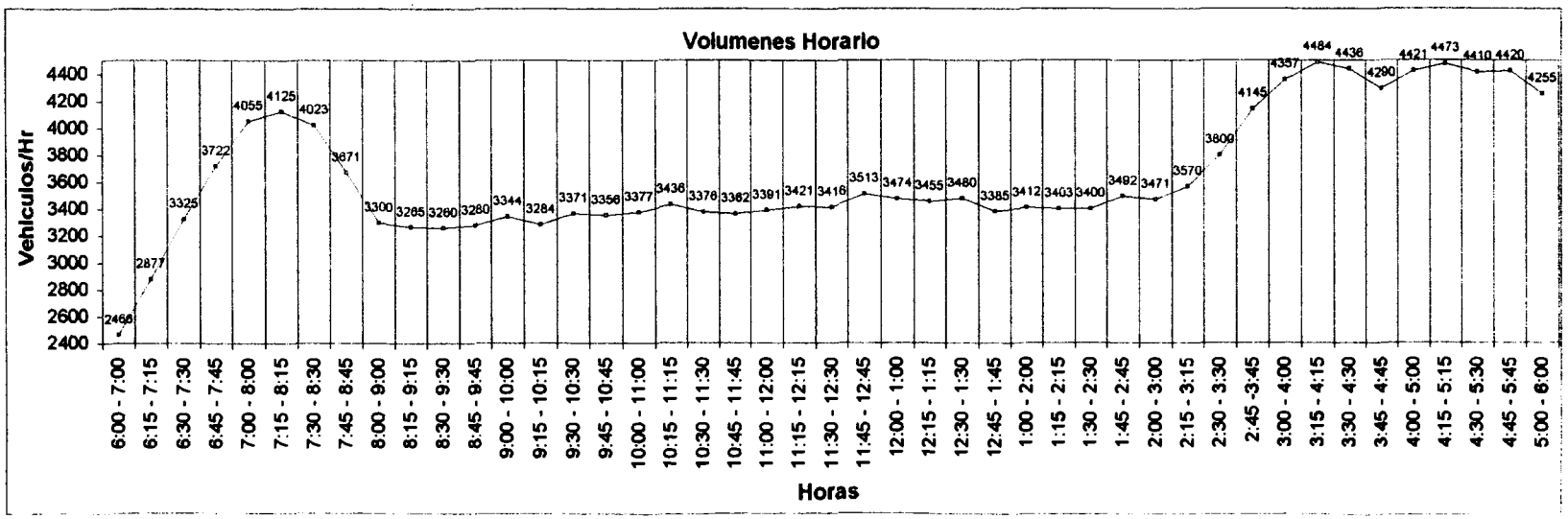

Sa... ...rew II
Conteo Vehicular (12 Horas)

FECHA: 23-Mar-09
INTERSECCION: PR-3, Rampa PR-53 & PR-925
NOMBRE: F. REYES

	PR-925 NORTE						PR-3 ESTE						RAMPA PR-53 SUR						PR-3 OESTE									
	IZQUIERDA		RECTO		DERECHA		IZQUIERDA		RECTO		DERECHA		IZQUIERDA		RECTO		DERECHA		IZQUIERDA		RECTO		DERECHA		1 HORA (7:45 - 8:45)		2 HORAS (7:45 - 9:45)	
HORA	VEHICULOS	PEATONES	VEHICULOS	PEATONES	VEHICULOS	PEATONES	VEHICULOS	PEATONES	VEHICULOS	PEATONES	VEHICULOS	PEATONES	VEHICULOS	PEATONES	VEHICULOS	PEATONES	VEHICULOS	PEATONES	VEHICULOS	PEATONES	VEHICULOS	PEATONES	VEHICULOS	PEATONES	VEHICULOS	PEATONES	VEHICULOS	PEATONES
6:00 - 6:15	9	0	9	0	37	2	26	0	112	2	19	1	28	0	2	0	14	0	31	4	120	1	15	0	422	10		
6:15 - 6:30	6	0	4	0	37	0	31	0	143	0	15	0	49	1	7	1	17	1	24	0	136	0	14	2	483	5		
6:30 - 6:45	15	0	16	1	51	1	62	2	202	1	26	0	36	0	7	1	14	0	140	1	178	7	14	-2	761	12		
6:45 - 7:00	26	0	14	1	56	0	57	0	238	2	40	2	56	0	4	1	31	1	36	1	183	4	18	2	759	14	2425	41
7:00 - 7:15	18	0	24	1	57	1	96	2	254	1	41	1	77	0	6	1	16	0	41	1	171	5	29	0	830	13	2833	44
7:15 - 7:30	15	1	27	1	73	1	85	2	299	3	52	0	87	1	5	0	20	0	38	0	182	5	39	0	922	14	3272	53
7:30 - 7:45	26	0	20	1	90	1	86	2	331	4	68	0	125	1	8	0	23	0	65	1	259	14	45	0	1146	24	3657	65
7:45 - 8:00	16	0	26	1	82	0	73	4	340	8	56	2	121	0	13	0	30	1	64	0	229	8	32	0	1082	24	3980	75
8:00 - 8:15	23	0	23	0	61	0	54	3	263	7	35	0	89	1	6	1	23	1	44	2	231	6	39	1	891	22	4041	84
8:15 - 8:30	15	0	3	1	52	1	45	2	256	7	35	3	81	3	10	0	15	1	49	0	217	11	27	0	805	29	3924	99
8:30 - 8:45	9	0	7	0	42	0	51	0	259	7	29	3	71	1	1	0	20	0	37	1	234	5	40	1	800	18	3578	93
8:45 - 9:00	13	0	10	1	56	1	42	0	215	5	17	0	81	0	3	0	27	1	37	1	186	5	33	1	720	15	3216	84
9:00 - 9:15	8	0	15	1	56	0	47	4	226	0	32	1	74	0	4	0	24	0	47	0	294	0	44	1	871	7	3196	69
9:15 - 9:30	9	0	13	1	58	0	55	3	221	5	32	1	78	0	3	0	18	0	55	0	211	0	66	0	819	10	3210	50
9:30 - 9:45	8	0	15	1	56	0	46	3	224	4	34	1	78	0	3	1	26	1	38	2	231	2	63	1	822	16	3232	48
9:45 - 10:00	9	1	15	1	58	1	56	1	220	0	19	0	80	0	3	0	20	1	44	2	210	5	52	1	786	13	3298	46
10:00 - 10:15	8	1	13	0	57	0	52	3	222	4	30	0	79	0	3	0	27	0	49	0	225	3	40	2	805	13	3232	52
10:15 - 10:30	13	0	11	0	56	1	47	1	221	2	19	0	78	0	7	1	25	0	50	3	306	5	70	0	903	13	3316	55
10:30 - 10:45	11	1	11	0	58	0	57	0	224	3	27	0	74	0	5	1	17	0	44	0	220	0	70	0	818	5	3312	44
10:45 - 11:00	13	0	13	0	56	0	43	0	226	2	34	0	80	0	6	0	22	0	54	3	199	0	68	1	814	6	3340	37
11:00 - 11:15	12	1	12	0	58	1	63	1	216	2	27	1	74	0	6	0	22	1	54	2	245	4	74	1	863	14	3398	38
11:15 - 11:30	10	1	13	0	58	1	53	1	218	0	19	1	81	0	3	1	23	1	46	0	292	0	33	1	849	7	3344	32
11:30 - 11:45	13	0	13	0	58	1	51	2	216	1	31	0	79	0	5	0	16	1	46	2	201	4	67	2	796	13	3322	40
11:45 - 12:00	13	0	14	1	56	1	42	1	220	3	18	1	74	0	4	0	21	1	38	3	259	3	75	1	834	15	3342	49
12:00 - 12:15	11	0	12	1	57	0	57	0	219	3	38	0	81	0	6	1	18	0	56	0	299	1	45	2	899	8	3378	43
12:15 - 12:30	12	0	15	0	58	1	50	3	224	0	30	0	74	0	4	0	23	0	52	2	237	3	62	1	841	10	3370	46
12:30 - 12:45	13	0	10	1	56	1	63	3	215	1	25	1	74	0	3	0	18	0	48	2	293	4	75	0	893	13	3467	46
12:45 - 1:00	9	0	14	0	56	0	52	1	224	0	27	1	80	0	7	1	24	1	54	3	206	0	48	2	801	9	3434	40
1:00 - 1:15	12	1	12	0	57	1	59	4	219	0	30	0	76	0	8	1	27	0	54	3	284	2	39	1	875	13	3410	45
1:15 - 1:30	12	1	14	1	58	1	59	1	218	2	27	0	79	0	7	0	16	1	52	0	258	2	67	0	867	9	3436	44
1:30 - 1:45	8	0	12	0	57	1	53	3	215	2	20	1	79	0	7	0	23	1	55	0	222	4	47	1	798	13	3341	44
1:45 - 2:00	8	0	14	1	56	1	64	2	225	0	20	1	81	0	3	1	16	0	48	2	253	1	40	0	828	9	3368	44
2:00 - 2:15	10	0	10	0	57	0	56	1	218	2	26	0	80	0	5	1	23	1	41	0	272	3	71	2	869	10	3362	41
2:15 - 2:30	12	1	10	0	56	0	49	3	220	3	22	0	76	0	4	0	23	0	52	3	264	0	74	1	862	11	3357	43
2:30 - 2:45	10	0	13	0	56	1	61	3	217	1	39	1	81	0	3	0	19	0	52	2	291	1	50	2	892	11	3451	41
2:45 - 3:00	10	0	14	1	56	0	45	1	221	1	29	0	80	0	7	0	24	0	49	2	223	4	47	2	805	11	3428	43

Sea View II
Conteo Vehicular (12 Horas)

FECHA: 23-Mar-09
INTERSECCION: PR-3, RAMPA PR-53 & Villa Humacao
NOMBRE: F. REYES

	RAMPA PR-53 NORTE						PR-3 ESTE						VILLA HUMACAO SUR						PR-3 OESTE									
	IZQUIERDA		RECTO		DERECHA		IZQUIERDA		RECTO		DERECHA		IZQUIERDA		RECTO		DERECHA		IZQUIERDA		RECTO		DERECHA		SUBTOTAL (15 MIN)		SUBTOTAL (1 HORA)	
HORA	UNIDADES	PEATONES	UNIDADES	PEATONES	UNIDADES	PEATONES	UNIDADES	PEATONES	UNIDADES	PEATONES	UNIDADES	PEATONES	UNIDADES	PEATONES	UNIDADES	PEATONES	UNIDADES	PEATONES	UNIDADES	PEATONES	UNIDADES	PEATONES	UNIDADES	PEATONES	UNIDADES	PEATONES	UNIDADES	PEATONES
6:00 - 6:15	39	5	4	1	24	2	3	5	114	4	9	2	22	1	6	0	7	0	44	2	103	0	6	5	381	27		
6:15 - 6:30	27	0	5	0	32	5	5	0	141	2	7	0	23	1	1	1	3	0	36	4	103	6	9	0	392	19		
6:30 - 6:45	60	2	6	3	57	2	10	3	201	8	7	1	34	4	11	1	7	1	39	5	157	4	26	0	815	34		
6:45 - 7:00	78	14	15	0	73	0	12	4	173	4	5	0	55	5	9	5	8	0	35	6	188	9	13	3	664	50	2052	130
7:00 - 7:15	60	5	17	3	73	2	14	1	218	7	2	0	74	6	9	0	7	0	44	2	149	6	24	2	691	34	2362	137
7:15 - 7:30	46	6	8	1	103	0	12	4	201	1	5	0	93	5	3	1	12	3	54	0	120	7	20	3	677	31	2647	149
7:30 - 7:45	72	0	22	4	122	5	13	0	248	6	4	0	64	0	11	0	28	0	38	0	200	16	58	0	880	31	2912	146
7:45 - 8:00	87	0	20	2	161	5	32	8	247	8	7	3	91	4	7	3	24	0	47	5	169	11	53	6	945	55	3193	151
8:00 - 8:15	69	0	12	3	101	1	15	0	186	5	4	0	86	3	2	0	24	3	63	5	203	9	33	2	798	31	3300	148
8:15 - 8:30	58	4	15	4	103	5	9	2	137	9	5	2	35	3	4	1	12	1	48	5	166	8	11	5	603	49	3226	166
8:30 - 8:45	41	0	5	5	95	0	5	1	187	5	4	0	37	5	7	0	7	7	37	3	192	9	25	3	642	38	2988	173
8:45 - 9:00	32	2	7	0	64	4	4	7	149	0	4	8	29	5	9	3	9	3	41	6	160	2	25	0	533	38	2576	156
9:00 - 9:15	45	1	9	0	64	2	4	4	156	5	2	1	46	2	8	2	15	1	69	2	175	3	38	0	631	23	2409	148
9:15 - 9:30	50	0	8	0	70	4	10	7	179	4	4	0	32	0	9	0	15	3	49	5	198	7	31	0	655	30	2461	129
9:30 - 9:45	47	0	12	0	67	2	5	1	166	3	4	1	31	0	9	0	10	2	58	2	163	5	38	0	610	16	2429	107
9:45 - 10:00	42	0	14	0	72	3	7	7	187	1	3	0	51	5	8	1	14	1	47	4	194	3	38	0	677	25	2573	94
10:00 - 10:15	42	1	12	0	65	2	6	1	210	1	5	1	47	2	9	0	12	1	70	0	161	5	37	0	676	14	2618	85
10:15 - 10:30	47	1	10	0	67	4	7	4	169	1	6	1	51	2	8	3	17	2	64	2	189	7	33	0	668	27	2631	82
10:30 - 10:45	32	1	12	0	71	2	4	7	151	3	4	2	43	3	8	0	12	0	62	1	204	2	33	0	636	21	2657	87
10:45 - 11:00	36	1	12	0	68	0	8	0	186	2	8	0	35	1	9	1	16	2	44	2	185	3	36	0	642	12	2622	74
11:00 - 11:15	36	2	8	0	67	1	8	7	167	5	11	0	39	0	9	0	10	1	52	5	182	6	36	0	625	27	2571	87
11:15 - 11:30	32	2	7	0	71	1	5	4	183	1	6	0	45	2	8	3	14	1	43	4	160	7	34	0	608	25	2511	85
11:30 - 11:45	44	2	13	0	72	2	8	3	176	4	8	0	45	4	9	0	14	0	49	4	161	6	33	0	632	25	2507	89
11:45 - 12:00	50	2	9	0	67	3	5	0	202	1	9	0	49	0	8	2	14	3	42	6	202	4	32	0	689	21	2554	98
12:00 - 12:15	49	2	14	0	69	0	4	3	204	0	6	0	50	5	8	2	16	1	69	6	160	6	27	0	676	25	2605	96
12:15 - 12:30	46	2	10	0	65	0	8	2	193	4	9	0	48	1	9	1	12	1	53	0	206	2	31	0	690	13	2687	84
12:30 - 12:45	47	1	8	0	67	4	4	1	152	5	10	0	45	4	9	3	10	2	68	5	186	5	39	0	645	30	2700	89
12:45 - 1:00	36	0	7	0	66	3	5	3	176	4	10	1	33	4	8	1	12	1	66	1	204	4	37	0	660	22	2671	90
1:00 - 1:15	52	1	7	0	66	3	8	1	172	4	8	0	38	2	8	2	15	1	46	1	177	6	36	0	633	21	2628	86
1:15 - 1:30	36	2	7	0	64	0	8	2	154	3	9	0	49	3	8	2	15	2	53	3	177	6	35	0	615	23	2553	96
1:30 - 1:45	48	1	12	0	72	3	6	1	153	5	6	0	50	2	8	0	12	0	56	1	171	7	28	0	622	20	2530	86
1:45 - 2:00	46	1	8	0	68	3	8	3	207	1	7	0	35	0	8	3	14	1	44	4	167	5	37	0	649	21	2519	85
2:00 - 2:15	42	1	12	0	64	2	7	3	157	0	8	0	36	2	8	2	14	3	46	2	193	7	38	0	625	22	2511	86
2:15 - 2:30	32	1	12	0	65	3	7	0	172	2	9	0	37	4	9	0	12	3	68	0	197	3	30	0	650	16	2546	79
2:30 - 2:45	34	1	9	0	65	0	9	2	155	3	8	1	43	5	8	1	11	0	51	1	207	4	40	0	640	18	2564	77
2:45 - 3:00	51	2	8	0	68	1	7	2	150	0	9	1	34	5	9	1	12	2	61	1	196	8	40	0	645	23	2560	79

Se... ...ew II

Conteo Vehicular (12 Horas)

FECHA: 23-Mar-09

INTERSECCION: PR-3, RAMPA PR-53 & Villa Humacao

NOMBRE: F. REYES

	RAMPA PR-53 NORTE						PR-3 ESTE						VILLA HUMACAO SUR						PR-3 OESTE									
	IZQUIERDA		RECTO		DERECHA		IZQUIERDA		RECTO		DERECHA		IZQUIERDA		RECTO		DERECHA		IZQUIERDA		RECTO		DERECHA					
HORA	VEHICULOS	PEATONES	VEHICULOS	PEATONES	VEHICULOS	PEATONES	VEHICULOS	PEATONES	VEHICULOS	PEATONES	VEHICULOS	PEATONES	VEHICULOS	PEATONES	VEHICULOS	PEATONES	VEHICULOS	PEATONES	VEHICULOS	PEATONES	VEHICULOS	PEATONES	VEHICULOS	PEATONES	VEHICULOS	PEATONES	VEHICULOS	PEATONES
3:00 - 3:15	52	0	14	0	72	0	10	0	215	5	12	1	51	2	8	3	17	2	70	4	209	8	42	0	772	25	2707	82
3:15 - 3:30	72	2	21	4	106	0	9	0	221	8	17	0	53	0	10	1	21	2	64	0	204	4	60	0	858	21	2915	87
3:30 - 3:45	80	2	16	5	83	2	18	0	345	3	38	1	39	0	12	2	15	3	55	4	228	11	41	1	970	34	3245	103
3:45 - 4:00	63	6	18	0	79	13	8	3	258	8	18	2	44	0	4	0	16	1	79	1	252	2	35	1	874	37	3474	117
4:00 - 4:15	65	0	12	3	89	0	12	0	201	4	33	1	45	0	6	0	5	2	75	1	246	3	56	3	845	17	3547	109
4:15 - 4:30	66	5	8	0	76	5	8	1	208	6	20	3	33	1	11	0	14	1	66	0	195	12	48	3	753	37	3442	125
4:30 - 4:45	60	5	19	5	90	0	10	3	283	9	15	2	48	0	6	2	16	3	58	3	219	2	55	3	879	37	3351	128
4:45 - 5:00	73	0	19	0	104	4	14	4	228	0	12	2	47	3	20	0	10	0	67	3	220	7	73	2	887	25	3364	116
5:00 - 5:15	72	2	16	0	68	1	16	3	248	7	28	0	48	0	16	0	26	1	56	0	212	9	69	0	875	23	3394	122
5:15 - 5:30	62	6	18	5	80	3	14	2	284	2	22	2	55	5	9	0	19	0	70	2	227	1	68	0	928	28	3569	113
5:30 - 5:45	57	2	16	2	74	3	14	0	211	0	10	4	55	1	19	4	19	0	65	0	253	2	73	7	866	25	3556	101
5:45 - 6:00	48	0	17	4	72	1	8	0	255	7	24	4	51	0	16	3	18	0	70	2	204	5	54	2	837	28	3506	104
HORA PICO 7:15 - 8:15	274	8	62	10	487	11	72	12	882	20	20	3	234	12	23	4	88	8	202	10	692	43	194	11	TOTALES HORA PICO		3300	148
																									FACTOR HORA PICO (PHF)		0.86	
HORA PICO 4:30 - 5:30	267	13	72	10	342	8	54	12	1043	18	77	6	198	8	51	2	71	4	251	8	878	19	285	5	TOTALES HORA PICO		3569	113
																									FACTOR HORA PICO (PHF)		0.96	
HORA PICO 11:45 - 12:45	192	7	41	0	268	7	21	8	751	10	34	0	192	10	34	8	52	7	232	17	754	17	129	0	TOTALES HORA PICO		2700	89
																									FACTOR HORA PICO (PHF)		0.98	

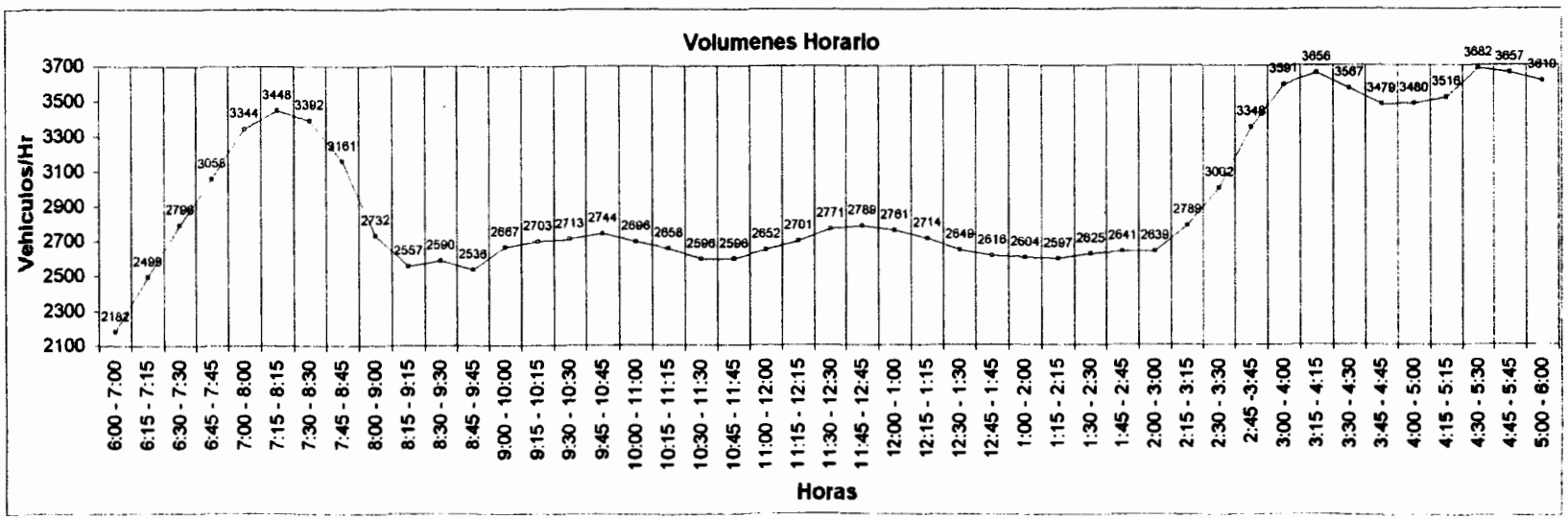

Sec. View II
Conteo Vehicular (12 Horas)

FECHA: 23-Mar-09
INTERSECCION: PR-3 & Centro Comercial
NOMBRE: F. REYES

	CENTRO COMERCIAL NORTE						PR-3 ESTE						ACCESO SUR						PR-3 OESTE									
	IZQUIERDA		RECTO		DERECHA		IZQUIERDA		RECTO		DERECHA		IZQUIERDA		RECTO		DERECHA		IZQUIERDA		RECTO		DERECHA		SUB TOTAL		SUMA TOTAL	
HORA	VEHICULOS	PEATONES	VEHICULOS	PEATONES	VEHICULOS	PEATONES	VEHICULOS	PEATONES	VEHICULOS	PEATONES	VEHICULOS	PEATONES	VEHICULOS	PEATONES	VEHICULOS	PEATONES	VEHICULOS	PEATONES	VEHICULOS	PEATONES	VEHICULOS	PEATONES	VEHICULOS	PEATONES	VEHICULOS	PEATONES	VEHICULOS	PEATONES
6:00 - 6:15	3	4			11	1			100	0	4	0							15	2	110	1			243	8		
6:15 - 6:30	5	2			13	4			119	8	0	0							15	6	131	5			283	25		
6:30 - 6:45	2	2			18	0			172	4	6	3							25	2	167	8			390	19		
6:45 - 7:00	3	2			21	2			184	7	11	2							34	0	231	6			484	19	1400	71
7:00 - 7:15	3	5			17	0			230	7	8	3							39	5	174	13			471	33	1628	96
7:15 - 7:30	5	4			22	0			241	9	12	2							44	4	182	5			506	24	1851	95
7:30 - 7:45	7	2			20	2			256	5	2	0							52	1	230	8			567	18	2028	94
7:45 - 8:00	9	0			33	5			230	6	6	1							71	1	283	16			632	29	2176	104
8:00 - 8:15	6	0			31	4			168	12	11	2							72	2	222	15			510	35	2215	106
8:15 - 8:30	3	5			29	8			127	10	7	2							73	3	153	15			392	43	2101	125
8:30 - 8:45	11	0			52	6			139	10	14	3							79	1	131	17			426	37	1960	144
8:45 - 9:00	9	3			58	0			116	14	11	3							102	5	127	9			423	34	1751	149
9:00 - 9:15	17	2			67	4			143	12	14	3							112	2	134	4			487	27	1728	141
9:15 - 9:30	10	3			59	2			138	11	14	0							107	2	149	4			477	22	1813	120
9:30 - 9:45	9	2			67	4			146	5	13	2							105	4	131	2			471	19	1858	102
9:45 - 10:00	20	2			59	2			145	1	11	2							103	2	147	4			485	13	1920	81
10:00 - 10:15	12	0			70	4			134	11	13	2							106	2	162	9			497	28	1930	82
10:15 - 10:30	12	0			60	1			131	7	14	1							113	2	136	0			466	11	1919	71
10:30 - 10:45	13	0			59	3			124	1	12	3							114	3	159	3			481	13	1929	65
10:45 - 11:00	19	2			66	0			141	12	11	3							115	1	145	6			497	24	1941	76
11:00 - 11:15	13	2			64	1			134	10	12	2							105	3	144	1			472	19	1916	67
11:15 - 11:30	16	0			66	1			150	9	11	1							113	2	169	3			525	16	1975	72
11:30 - 11:45	10	0			69	3			123	7	13	2							110	1	160	0			485	13	1979	72
11:45 - 12:00	14	0			61	4			144	11	12	2							114	3	152	8			497	28	1979	76
12:00 - 12:15	16	2			59	5			155	11	14	1							105	3	147	9			496	31	2003	88
12:15 - 12:30	13	3			68	5			158	13	12	2							115	2	150	0			516	25	1994	97
12:30 - 12:45	14	1			59	6			155	13	12	0							104	3	129	3			473	26	1982	110
12:45 - 1:00	14	1			64	4			151	8	12	3							113	2	169	2			523	20	2008	102
1:00 - 1:15	16	2			61	2			144	2	12	1							114	4	151	0			498	11	2010	82
1:15 - 1:30	12	2			69	4			160	8	11	1							105	3	139	6			496	24	1990	81
1:30 - 1:45	10	0			62	6			145	13	11	0							103	3	149	0			480	22	1997	77
1:45 - 2:00	16	1			66	1			159	2	12	3							105	2	155	5			513	14	1987	71
2:00 - 2:15	17	2			65	5			150	4	11	0							104	1	158	3			505	15	1994	75
2:15 - 2:30	13	3			67	2			137	7	13	2							112	2	131	2			473	18	1971	69
2:30 - 2:45	20	0			68	3			127	11	11	2							102	2	149	0			477	18	1968	65
2:45 - 3:00	9	2			66	1			127	11	11	0							112	2	147	4			472	20	1927	71

S... View II
Conteo Vehicular (12 Horas)

FECHA: 23-Mar-09
INTERSECCION: PR-3 & Centro Comercial
NOMBRE: F. REYES

HORA	CENTRO COMERCIAL NORTE						PR-3 ESTE						ACCESO SUR						PR-3 OESTE						SUMA TOTAL (12 HORAS)		SUMA PICO (1 HORA)	
	IZQUIERDA		RECTO		DERECHA		IZQUIERDA		RECTO		DERECHA		IZQUIERDA		RECTO		DERECHA		IZQUIERDA		RECTO		DERECHA					
	VEHICULOS	PEATONES	VEHICULOS	PEATONES	VEHICULOS	PEATONES	VEHICULOS	PEATONES	VEHICULOS	PEATONES	VEHICULOS	PEATONES	VEHICULOS	PEATONES	VEHICULOS	PEATONES	VEHICULOS	PEATONES	VEHICULOS	PEATONES	VEHICULOS	PEATONES	VEHICULOS	PEATONES	VEHICULOS	PEATONES	VEHICULOS	PEATONES
3:00 - 3:15	20	3			91	6			209	7	14	3							115	0	231	7			680	26	2102	82
3:15 - 3:30	16	2			103	6			217	5	13	1							109	3	225	11			683	28	2312	92
3:30 - 3:45	17	0			94	0			234	8	5	2							138	3	214	4			702	17	2537	91
3:45 - 4:00	11	5			91	4			203	3	12	2							113	1	211	11			641	26	2706	97
4:00 - 4:15	15	0			93	5			214	10	2	2							115	0	204	9			643	26	2669	97
4:15 - 4:30	11	2			92	4			172	7	5	3							100	4	196	8			576	28	2562	97
4:30 - 4:45	23	1			104	0			229	7	19	0							107	5	198	10			680	23	2540	103
4:45 - 5:00	18	5			100	1			202	9	3	0							131	3	202	8			656	26	2555	103
5:00 - 5:15	22	5			111	0			293	7	14	5							139	2	211	10			790	29	2702	106
5:15 - 5:30	13	3			94	3			149	2	12	3							100	3	184	4			552	18	2678	96
5:30 - 5:45	25	0			90	0			193	6	20	1							110	0	182	9			620	16	2618	89
5:45 - 6:00	20	5			91	2			184	11	6	2							102	2	177	6			580	28	2542	91
HORA PICO 7:15 - 8:15	27	8	0	0	108	11	0	0	895	32	31	5	0	0	0	0	0	0	239	8	917	44	0	0	TOTALES HORA PICO		2215	106
																									FACTOR HORA PICO (FHP)		0.86	
HORA PICO 4:15 - 5:15	74	13	0	0	407	5	0	0	896	30	41	8	0	0	0	0	0	0	477	14	807	36	0	0	TOTALES HORA PICO		2702	106
																									FACTOR HORA PICO (FHP)		0.88	
HORA PICO 12:00 - 1:00	57	7	0	0	250	20	0	0	819	45	50	6	0	0	0	0	0	0	437	10	596	14	0	0	TOTALES HORA PICO		2008	102
																									FACTOR HORA PICO (FHP)		0.97	

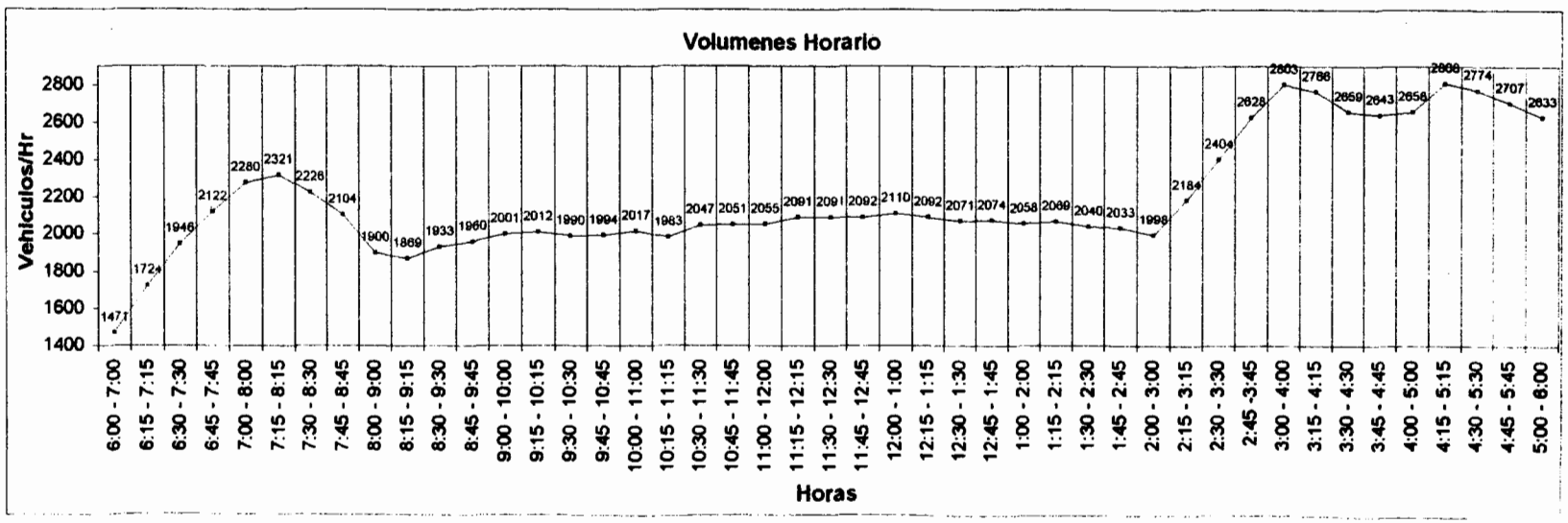

View II

Conteo Vehicular (12 Horas)

FECHA: 23-Mar-09
INTERSECCION: PR-3 & CIUDAD CRISTIANA
NOMBRE: F. REYES

	ACCESO NORTE						PR-3 ESTE						CIUDAD CRISRIANA SUR						PR-3 OESTE									
	IZQUIERDA		RECTO		DERECHA		IZQUIERDA		RECTO		DERECHA		IZQUIERDA		RECTO		DERECHA		IZQUIERDA		RECTO		DERECHA					
HORA	LIVIANOS	PESADOS	LIVIANOS	PESADOS	LIVIANOS	PESADOS	LIVIANOS	PESADOS	LIVIANOS	PESADOS	LIVIANOS	PESADOS	LIVIANOS	PESADOS	LIVIANOS	PESADOS	LIVIANOS	PESADOS	LIVIANOS	PESADOS	LIVIANOS	PESADOS	LIVIANOS	PESADOS	LIVIANOS	PESADOS	LIVIANOS	PESADOS
6:00 - 6:15							3	0	79	4			16	0			8	0			56	4	8	0	170	8		
6:15 - 6:30							3	1	109	1			20	0			5	0			89	7	5	0	231	9		
6:30 - 6:45							9	0	159	1			14	0			2	0			76	1	13	0	273	2		
6:45 - 7:00							1	0	153	6			30	0			5	0			105	5	5	0	299	11	973	30
7:00 - 7:15							5	0	192	9			37	0			11	0			100	6	10	0	355	15	1158	37
7:15 - 7:30							9	0	212	7			51	0			10	0			141	6	7	1	430	14	1357	42
7:30 - 7:45							8	0	220	3			49	0			9	0			163	5	11	0	460	8	1544	48
7:45 - 8:00							2	0	205	6			45	0			13	0			145	9	14	1	424	16	1669	53
8:00 - 8:15							10	0	147	7			18	0			7	0			177	7	15	0	374	14	1688	52
8:15 - 8:30							9	0	133	5			19	0			2	0			100	6	18	0	281	11	1539	49
8:30 - 8:45							0	0	162	4			13	0			8	0			105	7	16	0	304	11	1383	52
8:45 - 9:00							5	0	9	4			14	0			7	0			98	5	8	0	141	9	1100	45
9:00 - 9:15							8	0	134	5			19	0			4	0			125	4	20	0	310	9	1036	40
9:15 - 9:30							10	0	10	2			15	0			4	0			152	1	12	0	203	3	958	32
9:30 - 9:45							9	0	208	3			15	0			5	0			155	0	26	0	418	3	1072	24
9:45 - 10:00							6	0	120	3			14	0			4	0			170	2	32	0	346	5	1277	20
10:00 - 10:15							5	0	16	3			16	0			7	0			122	2	14	0	180	5	1147	16
10:15 - 10:30							9	0	43	0			18	0			6	0			112	6	25	0	213	6	1157	19
10:30 - 10:45							6	0	192	4			17	0			4	0			125	7	36	0	380	11	1119	27
10:45 - 11:00							10	0	132	0			17	0			3	0			149	0	17	0	328	0	1101	22
11:00 - 11:15							10	0	57	5			19	0			3	0			133	2	27	0	249	7	1170	24
11:15 - 11:30							8	0	88	3			16	0			4	0			174	4	20	0	310	7	1267	25
11:30 - 11:45							6	0	19	4			14	0			7	0			148	5	20	0	214	9	1101	23
11:45 - 12:00							11	0	172	2			18	0			3	0			144	5	27	0	375	7	1148	30
12:00 - 12:15							10	0	152	5			14	0			5	0			106	1	14	0	301	6	1200	29
12:15 - 12:30							6	0	176	0			16	0			6	0			181	3	33	0	418	3	1308	25
12:30 - 12:45							6	0	34	1			16	0			6	0			138	5	25	0	225	6	1319	22
12:45 - 1:00							12	0	166	6			15	0			5	0			104	4	33	0	335	10	1279	25
1:00 - 1:15							7	0	205	1			17	0			6	0			150	1	10	0	395	2	1373	21
1:15 - 1:30							6	0	66	2			18	0			4	0			106	4	31	0	231	6	1186	24
1:30 - 1:45							7	0	198	0			18	0			7	0			115	10	17	0	362	10	1323	28
1:45 - 2:00							10	0	197	4			19	0			3	0			118	3	22	0	369	7	1357	25
2:00 - 2:15							11	0	134	3			14	0			4	0			125	9	23	0	311	12	1273	35
2:15 - 2:30							10	0	35	2			16	0			4	0			130	1	26	0	221	3	1263	32
2:30 - 2:45							5	0	121	5			19	0			6	0			143	5	20	0	314	10	1215	32
2:45 - 3:00							11	0	152	0			15	0			3	0			119	0	14	0	314	0	1160	25

Sea View II

Conteo Vehicular (12 Horas)

FECHA: 23-Mar-09

INTERSECCION: PR-3 & CIUDAD CRISTIANA

NOMBRE: F. REYES

HORA	ACCESO NORTE						PR-3 ESTE						CIUDAD CRISRIANA SUR						PR-3 OESTE									
	IZQUIERDA		RECTO		DERECHA		IZQUIERDA		RECTO		DERECHA		IZQUIERDA		RECTO		DERECHA		IZQUIERDA		RECTO		DERECHA		TOTALES		TOTALES	
	LIVIANOS	PESADOS	LIVIANOS	PESADOS	LIVIANOS	PESADOS	LIVIANOS	PESADOS	LIVIANOS	PESADOS	LIVIANOS	PESADOS	LIVIANOS	PESADOS	LIVIANOS	PESADOS	LIVIANOS	PESADOS	LIVIANOS	PESADOS	LIVIANOS	PESADOS	LIVIANOS	PESADOS	LIVIANOS	PESADOS	LIVIANOS	PESADOS
3:00 - 3:15							12	0	180	6			19	0			3	0			182	5	36	0	432	11	1281	24
3:15 - 3:30							11	0	157	6			12	0			5	0			176	8	43	1	404	15	1464	36
3:30 - 3:45							11	0	158	5			20	0			8	0			193	6	32	0	422	11	1572	37
3:45 - 4:00							11	0	153	4			26	0			3	0			188	3	40	1	421	8	1679	45
4:00 - 4:15							3	0	137	4			18	0			1	0			154	3	38	0	351	7	1598	41
4:15 - 4:30							3	0	150	6			30	0			6	0			191	1	24	0	404	7	1598	33
4:30 - 4:45							13	0	139	0			13	0			4	0			174	3	29	0	372	3	1548	25
4:45 - 5:00							11	0	153	4			25	0			2	0			187	2	30	0	408	6	1535	23
5:00 - 5:15							6	0	152	5			23	0			0	0			193	5	25	0	399	10	1583	26
5:15 - 5:30							5	0	134	6			28	0			5	0			197	4	28	0	397	10	1576	29
5:30 - 5:45							0	0	168	7			17	0			8	0			168	5	35	0	396	12	1600	38
5:45 - 6:00							8	0	141	4			21	0			7	0			146	4	31	0	354	8	1546	40
HORA PICO 7:15 - 8:15	0	0	0	0	0	0	29	0	784	23	0	0	163	0	0	0	39	0	0	0	626	27	47	2	TOTALES HORA PICO		1688	52
																									FACTOR HORA PICO (PHF)		0.93	
HORA PICO 3:00 - 4:00	0	0	0	0	0	0	45	0	648	21	0	0	77	0	0	0	19	0	0	0	739	22	151	2	TOTALES HORA PICO		1679	45
																									FACTOR HORA PICO (PHF)		0.97	
HORA PICO 12:15 - 1:15	0	0	0	0	0	0	31	0	561	8	0	0	64	0	0	0	23	0	0	0	573	13	101	0	TOTALES HORA PICO		1373	21
																									FACTOR HORA PICO (PHF)		0.83	

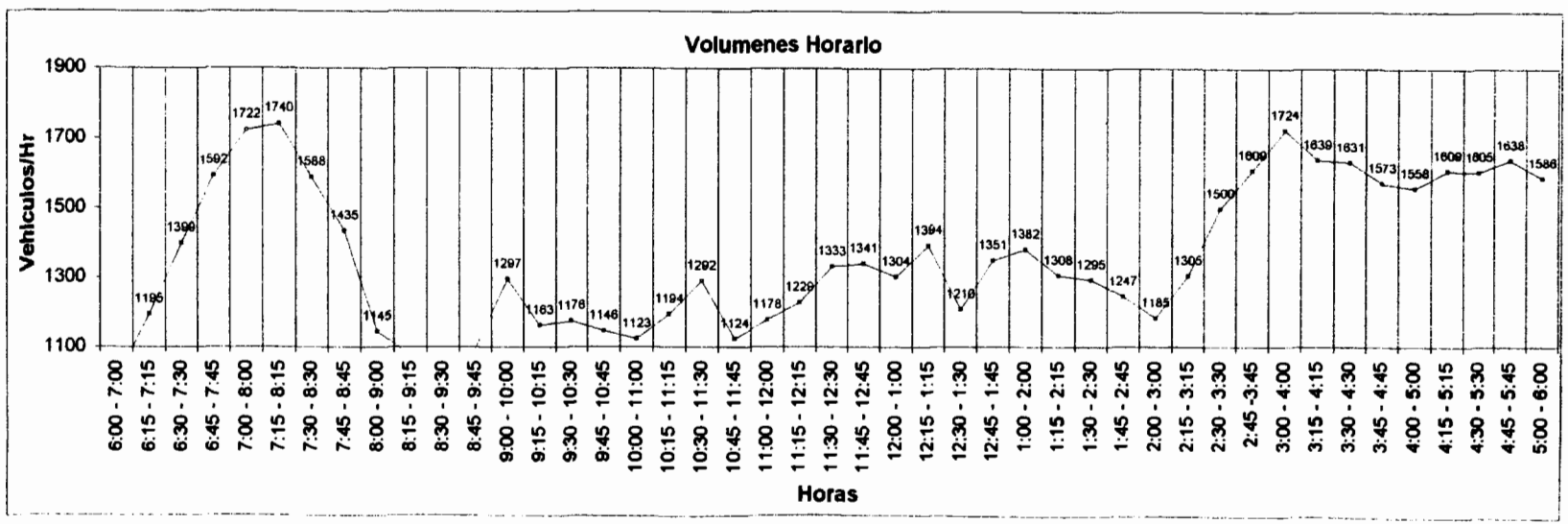

Sec. view II
Conteo Vehicular (12 Horas)

FECHA: 23-Mar-09
INTERSECCION: PR-3 & PR-825
NOMBRE: F. REYES

	PR-825 NORTE						PR-3 ESTE						ACCESO SUR						PR-3 OESTE									
	IZQUIERDA		RECTO		DERECHA		IZQUIERDA		RECTO		DERECHA		IZQUIERDA		RECTO		DERECHA		IZQUIERDA		RECTO		DERECHA		[illegible]		[illegible]	
HORA	LIVIANOS	PESADOS	LIVIANOS	PESADOS	LIVIANOS	PESADOS	LIVIANOS	PESADOS	LIVIANOS	PESADOS	LIVIANOS	PESADOS	LIVIANOS	PESADOS	LIVIANOS	PESADOS	LIVIANOS	PESADOS	LIVIANOS	PESADOS	LIVIANOS	PESADOS	LIVIANOS	PESADOS	LIVIANOS	PESADOS	LIVIANOS	PESADOS
6:00 - 6:15	5	3			21	3			74	4	4	0							3	3	37	2			144	15		
6:15 - 6:30	6	2			23	4			89	0	5	0							6	1	57	0			186	7		
6:30 - 6:45	5	0			25	3			120	5	1	0							12	1	44	2			207	11		
6:45 - 7:00	12	1			34	0			131	4	6	1							15	0	70	4			268	10	805	43
7:00 - 7:15	12	3			25	4			167	3	7	0							12	0	69	7			292	17	953	45
7:15 - 7:30	12	2			30	0			185	2	8	1							16	0	95	5			346	10	1113	48
7:30 - 7:45	23	0			37	3			191	2	14	0							30	6	117	8			412	19	1318	56
7:45 - 8:00	15	1			34	4			174	3	14	2							24	0	103	4			364	14	1414	60
8:00 - 8:15	13	2			41	1			109	3	6	0							24	0	120	3			313	9	1435	52
8:15 - 8:30	7	0			15	4			104	0	5	0							8	2	74	11			213	17	1302	59
8:30 - 8:45	1	3			20	4			117	3	5	2							11	1	76	8			230	21	1120	61
8:45 - 9:00	9	1			17	4			97	2	8	3							15	2	66	3			212	15	968	62
9:00 - 9:15	9	1			18	2			101	0	0	0							16	2	107	0			251	5	906	58
9:15 - 9:30	15	3			19	3			102	1	14	1							16	0	94	5			260	13	953	54
9:30 - 9:45	12	2			18	1			96	6	9	0							20	0	116	3			273	12	996	45
9:45 - 10:00	16	2			18	0			102	1	9	0							18	0	123	3			286	6	1070	36
10:00 - 10:15	14	1			18	5			136	3	8	0							20	1	115	0			311	10	1130	41
10:15 - 10:30	17	1			17	2			117	22	14	2							18	0	142	5			325	32	1195	60
10:30 - 10:45	11	0			17	0			106	0	12	1							15	1	74	4			235	6	1157	54
10:45 - 11:00	13	3			21	0			131	2	12	2							15	0	96	0			288	7	1159	55
11:00 - 11:15	9	3			22	2			148	4	9	3							21	2	96	0			305	14	1153	59
11:15 - 11:30	10	2			21	3			99	5	10	0							17	0	84	4			241	14	1069	41
11:30 - 11:45	13	2			21	0			108	4	13	1							20	0	141	2			316	9	1150	44
11:45 - 12:00	14	3			22	2			99	2	14	0							15	0	83	3			247	10	1109	47
12:00 - 12:15	16	3			21	0			139	2	12	2							16	1	125	4			329	12	1133	45
12:15 - 12:30	13	2			20	3			115	0	10	3							15	1	143	5			316	14	1208	45
12:30 - 12:45	16	3			22	0			116	6	11	2							16	1	140	4			321	16	1213	52
12:45 - 1:00	16	0			19	2			104	5	8	1							20	1	95	3			262	12	1228	54
1:00 - 1:15	9	3			20	2			109	3	9	1							15	2	96	4			258	15	1157	57
1:15 - 1:30	14	0			19	3			123	2	12	1							19	2	135	3			322	11	1163	54
1:30 - 1:45	17	0			20	1			105	3	12	2							15	0	69	0			238	6	1080	44
1:45 - 2:00	14	3			17	3			146	2	14	0							16	1	122	3			329	12	1147	44
2:00 - 2:15	16	3			20	3			106	2	13	2							19	1	140	2			314	13	1203	42
2:15 - 2:30	13	2			20	3			132	3	9	0							21	1	66	5			261	14	1142	45
2:30 - 2:45	16	3			19	1			111	1	9	2							21	2	69	4			245	13	1149	52
2:45 - 3:00	10	3			18	0			135	1	12	2							19	0	77	2			271	8	1091	48

Sea ..iew II
Conteo Vehicular (12 Horas)

FECHA: 23-Mar-09
INTERSECCION: PR-3 & PR-925
NOMBRE: F. REYES

	PR-925 NORTE						PR-3 ESTE						ACCESO SUR						PR-3 OESTE									
	IZQUIERDA		RECTO		DERECHA		IZQUIERDA		RECTO		DERECHA		IZQUIERDA		RECTO		DERECHA		IZQUIERDA		RECTO		DERECHA		SUMATORIA (15 MIN)		SUMATORIA (1 HR)	
HORA	LIVIANOS	PESADOS	LIVIANOS	PESADOS	LIVIANOS	PESADOS	LIVIANOS	PESADOS	LIVIANOS	PESADOS	LIVIANOS	PESADOS	LIVIANOS	PESADOS	LIVIANOS	PESADOS	LIVIANOS	PESADOS	LIVIANOS	PESADOS	LIVIANOS	PESADOS	LIVIANOS	PESADOS	LIVIANOS	PESADOS	LIVIANOS	PESADOS
3:00 - 3:15	17	2			22	3			152	3	14	2							21	0	143	5			369	15	1146	50
3:15 - 3:30	11	2			13	0			109	4	16	1							24	5	137	5			310	17	1195	53
3:30 - 3:45	15	2			18	0			117	1	5	1							51	0	173	3			379	7	1329	47
3:45 - 4:00	5	1			26	3			103	5	23	0							36	0	166	6			359	15	1417	54
4:00 - 4:15	8	2			15	2			115	0	10	0							33	3	131	0			312	7	1360	46
4:15 - 4:30	2	3			9	0			116	0	7	0							29	5	147	1			310	9	1380	38
4:30 - 4:45	11	0			19	2			93	2	12	1							38	1	155	1			328	7	1309	38
4:45 - 5:00	3	2			15	0			117	3	10	2							35	5	162	5			342	17	1292	40
5:00 - 5:15	4	0			17	2			88	3	20	2							28	3	165	0			322	10	1302	43
5:15 - 5:30	16	1			11	1			87	2	8	1							44	5	154	3			320	13	1312	47
5:30 - 5:45	17	3			18	0			113	2	5	0							31	0	147	3			331	8	1315	48
5:45 - 6:00	13	2			16	3			103	6	8	0							20	4	113	4			273	19	1246	50

HORA PICO 7:15 - 8:15	63	5	0	0	142	8	0	0	659	10	42	3	0	0	0	0	0	0	94	6	435	20	0	0	TOTALES HORA PICO	1435	52
																									FACTOR HORA PICO (PHF)		0.86
HORA PICO 3:00 - 4:00	48	7	0	0	79	6	0	0	481	13	58	4	0	0	0	0	0	0	132	5	619	19	0	0	TOTALES HORA PICO	1417	54
																									FACTOR HORA PICO (PHF)		0.95
HORA PICO 12:00 - 1:00	61	8	0	0	82	5	0	0	474	13	41	8	0	0	0	0	0	0	67	4	503	16	0	0	TOTALES HORA PICO	1228	54
																									FACTOR HORA PICO (PHF)		0.94

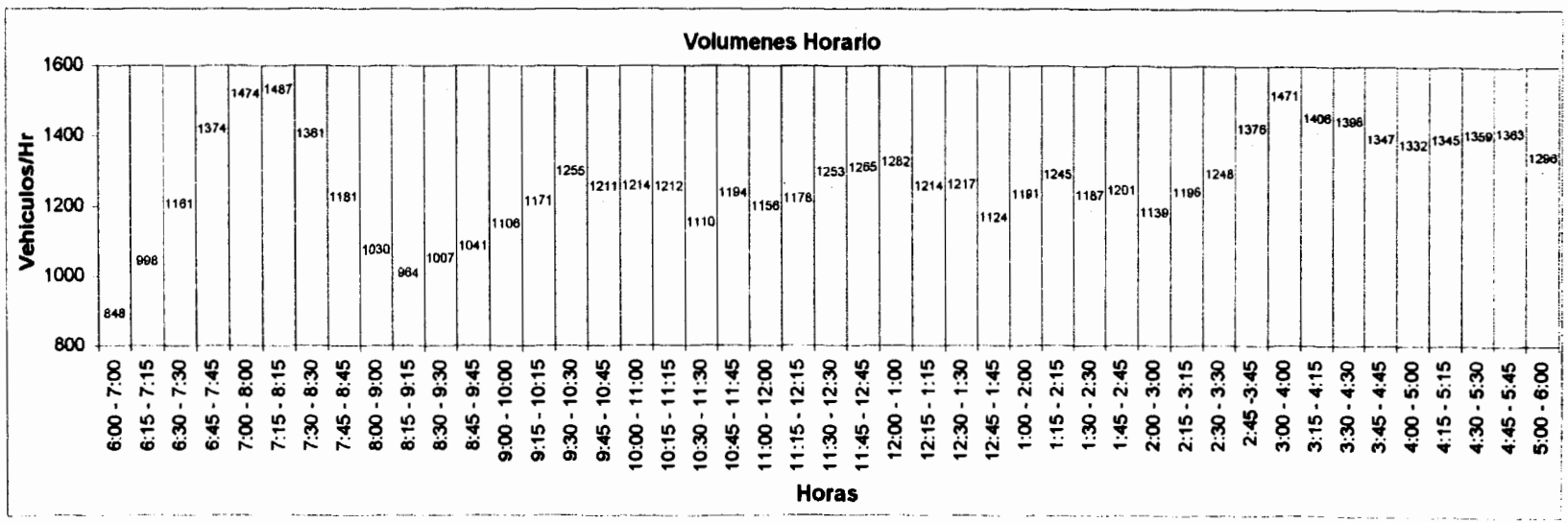

ANEJO 2
GENERACION DE VIAJES

Sea View II
Summary of Multi-Use Trip Generation
Average Weekday Driveway Volumes
marzo 24, 2009

Land Use	Size	24 Hour Two-Way Volume	AM Pk Hour Enter	AM Pk Hour Exit	PM Pk Hour Enter	PM Pk Hour Exit
Apartments	210 Dwelling Units	1392	17	90	88	44
Single Family Detached Housing	92 Dwelling Units	960	18	55	63	36
Apartments	720 Dwelling Units	4450	58	302	274	137
Total		6802	93	447	425	217

Note: A zero indicates no data available.

TRIP GENERATION BY MICROTRANS

ANEJO 3
ANALISI DE TRANSITO 2009
AASIDRA 2.0

Akcelik & Associates Pty Ltd - aaSIDRA 2.0.0.205

Servicios Técnicos Integrados
Francisco J. Reyes Registered User No. 50310
Licence Type: Professional, Single Computer

Time and Date of Analysis 2:42 AM, May 4,2009

Filename: F:\My Documents\Francisco\Consultores\April\Humacao\Sea View II\Sidra\53-VH-3-09AM.OUT

Sea View II
InT. PR-3, Rampa PR-53 & Villas de Humacao, Hora Pico AM, 2009
Intersection ID: 4

aaTraffic SIDRA US Highway Capacity Manual (2000) Version

RUN INFORMATION

Parameter sensitivity run: "Optimum" Maximum Green = 60.0 %

* Basic Parameters:
  Intersection Type: Signalised - Actuated Isolated
  For fully-actuated signal timings, the following specifications will be ignored:
    Any maximum cycle time specification
    Any user-given cycle time (unless phase times also given)
    User-given cycle and phase times (if variable flow scale run)
    Any variable cycle time specification
    Any green split priority specification
  Driving on the right-hand side of the road
  Input data specified in US units
  Default Values File No. 11
  Peak flow period (for performance): 15 minutes
  Unit time (for volumes): 60 minutes (Total Flow Period)
  Delay definition: Control delay
                Geometric delay included
  HCM Delay and Queue Models option selected
  Level of Service based on: Delay (HCM method)
  Queue definition: Back of queue, 95th Percentile

* No. of Main (Timing-Capacity) Iterations = 3
  Comparison of last two iterations:
    Difference in intersection degree of satn = 0.0 %
    Difference in total vehicle capacity = 0.0 %
    Largest difference in eff. green times = 0 secs
    (max. value for stopping = 0 secs)

Sea View II
InT. PR-3, Rampa PR-53 & Villas de Humacao, Hora Pico AM, 2009
Intersection ID: 4
Actuated Isolated Signals, Cycle Time = 123

Table S.3 - INTERSECTION PARAMETERS

Critical Movements: 53(1st), 22, 11, 41, 32

L= 87 Y= 0.111 U= 0.210 T= 112.9

Cycle Time:

Minimum	Maximum	Practical	Chosen
70	NA	111	123

Intersection Level of Service	=	E
Worst movement Level of Service	=	F
Average intersection delay (s)	=	55.9
Largest average movement delay (s)	=	103.2
Largest back of queue, 95% (ft)	=	854
Performance Index	=	253.89
Degree of saturation (highest)	=	0.934
Practical Spare Capacity (lowest)	=	-4 %
Total vehicle capacity, all lanes (veh/h)	=	8186
Total vehicle flow (veh/h)	=	4011
Total person flow (pers/h)	=	4813
Total vehicle delay (veh-h/h)	=	62.29
Total person delay (pers-h/h)	=	74.75
Total effective vehicle stops (veh/h)	=	3397
Total effective person stops (pers/h)	=	4076
Total vehicle travel (veh-mi/h)	=	1670.0
Total cost ($/h)	=	1171.36
Total fuel (ga/h)	=	110.0
Total CO2 (kg/h)	=	1042.50

Sea View II
InT. PR-3, Rampa PR-53 & Villas de Humacao, Hora Pico AM, 2009
Intersection ID: 4
Actuated Isolated Signals, Cycle Time = 123

Table S.4 - PHASE INFORMATION

Phase Change Times: 0, 23, 38, 71, 100
Phase Green Times: 20, 12, 30, 26, 20

Current Phase Sequence No.: 1
Input phase sequence: A B C D E
Output phase sequence: A B C D E

Sea View II
InT. PR-3, Rampa PR-53 & Villas de Humacao, Hora Pico AM, 2009
Intersection ID: 4
Actuated Isolated Signals, Cycle Time = 123

Table S.6 - INTERSECTION PERFORMANCE

Total Flow	Deg. Satn	Total Delay	Total Delay	Aver. Delay	Prop. Queued	Eff. Stop	Longest Queue	Perf. Index	Aver. Speed

(veh/h)	x	(veh-h/h)	(pers-h/h)	(sec)		Rate	(ft)	(mph)
INTERSECTION (persons):								
4813	0.934	74.75	55.9	0.774	0.85		253.89	25.8

Queue values in this table are 95% back of queue (feet).

Sea View II
InT. PR-3, Rampa PR-53 & Villas de Humacao, Hora Pico AM, 2009
Intersection ID: 4
Actuated Isolated Signals, Cycle Time = 123

Table S.7 - LANE PERFORMANCE

Lane No.	Mov No.	Effective Red and Green Times (sec) R1	G1	R2	G2	Dem Flow (veh /h)	Cap (veh /h)	Deg. Satn x	Aver. Delay (sec)	Eff. Stop Rate	Queue 95% Back (vehs)	(ft)	Shrt Lane (ft)
West: PR-3 Oeste													
1 T	11	93	30	0	0	428	461	0.928	76.5	0.99	32.6	854	
2 T	11	93	30	0	0	428	461	0.928	76.5	0.99	32.6	854	
SouthWest: PR-3 Oeste													
1 L	52	103	20	0	0	247	296	0.834	81.9	0.90	19.5	505	
2 R	53	3	20	14	86	204	1068	0.191	12.2	0.76	2.5	67	
South: Villas de Humacao Sur													
1 L	32	103	20	0	0	280	300	0.934	102.7	0.98	23.5	604	
2 LTR	32, 33	103	20	0	0	263	282	0.934	103.4	0.98	22.4	587	
East: PR-3 Este													
1 L	22	111	12	0	0	98	164	0.597	77.2	0.78	7.9*	221	160
2 T	21	78	45	0	0	525	716	0.733	41.6	0.81	31.5	802	
3 T	21	78	45	0	0	525	716	0.733	41.6	0.81	31.5	802	
4 R	23	3	45	3	72	26	1271	0.020	9.6	0.65	0.1	2	160
North: Rampa PR-53 Norte													
1 L	42	97	26	0	0	208	394	0.527	59.0	0.82	14.0	356	
2 LT	42, 41	97	26	0	0	202	384	0.527	55.5	0.79	13.7	362	
3 R	43	0	123	0	0	579	1674	0.346	9.2	0.65	14.8#		60

\# Density (passenger cars per km or mile)
* Queue length exceeds short lane length due to specification of a percentile queue in the aaSIDRA Configuration File. For calculation of this statistic, you may specify the lane with full length.

Sea View II
InT. PR-3, Rampa PR-53 & Villas de Humacao, Hora Pico AM, 2009
Intersection ID: 4
Actuated Isolated Signals, Cycle Time = 123

Table S.10 - MOVEMENT CAPACITY AND PERFORMANCE SUMMARY

Mov No.	Mov Typ	Dem Flow (veh /h)	Total Cap. (veh /h)	Lane Util (%)	Deg. Satn x	Eff. Grn 1st Grn	Eff. Grn 2nd Grn	Aver. Delay (sec)	Eff. Stop Rate	95% Back of Queue (veh)	Perf. Index
West: PR-3 Oeste											
11	T	855	922	100	0.928	30*		76.5	0.99	32.6	70.01
SouthWest: PR-3 Oeste											
52	L	247	296	100	0.835	20		81.9	0.90	19.5	20.02
53	R (Un2)	204	1068	100	0.191	20*	86	12.2	0.76	2.5	4.92
South: Villas de Humacao Sur											
32	L	402	430	100	0.934*	20*		103.2	0.98	23.5	36.78
33	TR (Un1)	141	151	100	0.933	20		102.5	0.98	22.4	12.90
East: PR-3 Este											
22	L	98	164	100	0.596	12*		77.2	0.78	7.9	7.56
21	T	1049	1432	100	0.733	45		41.6	0.81	31.5	64.48
23	R (Und)	26	1271<	100	0.020	45	72	9.6	0.65	0.1	0.48
North: Rampa PR-53 Norte											
42	L	326	618	100	0.527	26		59.0	0.82	14.0	21.79
41	T	84	159	100	0.527	26*		50.1	0.76	13.7	5.38
43	R (Con)	579	1674	100	0.346	123		9.2	0.65	14.8 #	9.58

< Reduced capacity due to a short lane effect
* Maximum degree of saturation, or critical green periods
# Largest density (passenger cars per km or mile) for any lane

Sea View II
InT. PR-3, Rampa PR-53 & Villas de Humacao, Hora Pico AM, 2009
Intersection ID: 4
Actuated Isolated Signals, Cycle Time = 123

Table S.14 - SUMMARY OF INPUT AND OUTPUT DATA

Lane No.	Demand Flow (veh/h) L	T	R	Tot	%HV	Adj. Basic Satf.	Eff Grn (secs) 1st	2nd	Deg Sat x	Aver. Delay (sec)	Longest Queue (ft)	Shrt Lane (ft)
West: PR-3 Oeste												
1 T		428		428	6	2000	30		0.928	76.5	854	
2 T		428		428	6	2000	30		0.928	76.5	854	
	0	855	0	855	6				0.928	76.5	854	
SouthWest: PR-3 Oeste												
1 L	247			247	5	2000	20		0.834	81.9	505	
2 R			204	204	6	2000	20	86	0.191	12.2	67	
	247	0	204	451	6				0.834	50.3	505	

South: Villas de Humacao Sur												
1 L	280			280	3	2000	20		0.934	102.7	604	
2 LTR	122	32	109	263	6	2000	20		0.934	103.4	587	
	402	32	109	543	5				0.934	103.1	604	
East: PR-3 Este												
1 L	98			98	14	2000	12		0.597	77.2	221*	160
2 T		525		525	2	2000	45		0.733	41.6	802	
3 T		525		525	2	2000	45		0.733	41.6	802	
4 R			26	26	12	2000	45	72	0.020	9.6	2	160
	98	1049	26	1173	3				0.733	43.8	802	
North: Rampa PR-53 Norte												
1 L	208			208	2	2000	26		0.527	59.0	356	
2 LT	118	84		202	7	2000	26		0.527	55.5	362	
3 R			579	579	2	2000	123		0.346	9.2		60
	326	84	579	989	3				0.527	29.1	362	

ALL VEHICLES	Total Flow	% HV	Cycle Time	Max X	Aver. Delay	Max Queue
	4011	4	123	0.934	55.9	854

Total flow period = 60 minutes. Peak flow period = 15 minutes.

Queue values in this table are 95% back of queue (feet).

Note: Basic Saturation Flows (in through car units) have been adjusted for grade, lane widths, parking manoeuvres and bus stops.

* Queue length exceeds short lane length due to specification of a percentile queue in the aaSIDRA Configuration File. For calculation of this statistic, you may specify the lane with full length.

Sea View II
InT. PR-3, Rampa PR-53 & Villas de Humacao, Hora Pico AM, 2009
Intersection ID: 4
Actuated Isolated Signals, Cycle Time = 123

Table S.15 - CAPACITY AND LEVEL OF SERVICE

Mov No.	Mov Typ	Green Ratio (g/C) 1st grn	Green Ratio (g/C) 2nd grn	Total Flow (veh /h)	Total Cap. (veh /h)	Deg. of Satn (v/c)	Aver. Delay (sec)	LOS
West: PR-3 Oeste								
11	T	0.244*		855	922	0.928	76.5	E
				855	922	0.928	76.5	E

SouthWest: PR-3 Oeste							
52 L		0.163		247	296	0.835	81.9	F
53 R	(Un2)	0.163*	0.699	204	1068	0.191	12.2	B
				451	1364	0.835	50.3	D
South: Villas de Humacao Sur								
32 L		0.163*		402	430	0.934*	103.2	F
33 TR	(Un1)	0.163		141	151	0.933	102.5	F
				543	581	0.934	103.0	F
East: PR-3 Este								
22 L		0.098*		98	164	0.596	77.2	E
21 T		0.366		1049	1432	0.733	41.6	D
23 R	(Und)	0.366	0.585	26	1271<	0.020	9.6	A
				1173	2867	0.733	43.8	D
North: Rampa PR-53 Norte								
42 L		0.211		326	618	0.527	59.0	E
41 T		0.211*		84	159	0.527	50.1	D
43 R	(Con)	1.000		579	1674	0.346	9.2	B#
				989	2452	0.527	29.1	C
ALL VEHICLES:				4011	8186	0.934	55.9	E
INTERSECTION (persons):				4813	8186	0.934	55.9	

Level of Service calculations are based on
average control delay including geometric delay (HCM criteria),
independent of the current delay definition used.
For the criteria, refer to the "Level of Service" topic in the
aaSIDRA Output Guide or the Output section of the on-line help.

\# Level Of Service for continuous movements based on density
< Reduced capacity due to a short lane effect
* Maximum v/c ratio, or critical green periods

Sea View II
InT. PR-3, Rampa PR-53 & Villas de Humacao, Hora Pico AM, 2009
Intersection ID: 4

Table S.23 - SENSITIVITY ANALYSIS RESULTS

Performance Measure	Smallest Value	Param Scale
Degree of Satn	0.934	60
Average Delay	55.9	60
Stop Rate	0.80	115
Max. Queue for Any Movement	31.8	80
Perf. Index	253.9	60

Cost total	1171.4	60

Performance Measure	Largest Value	Param Scale
Total Vehicle Cap.	8473	100
Prac. Spare Cap.	-4	60

Sea View II
InT. PR-3, Rampa PR-53 & Villas de Humacao, Hora Pico AM, 2009
Intersection ID: 4
Actuated Isolated Signals, Cycle Time = 123

Table D.5 - PROGRESSION FACTORS & ACTUATED SIGNAL PARAMETERS

Mov No.	Control	Coord.	Arrival Type	Delay Prog. Factor	Queue Prog. Factor	Gap Settings es	Gap Settings eh	Disp. Grn. Settings 1st Grn Gmin	1st Grn Gmax	2nd Grn Gmin	2nd Grn Gmax
West: PR-3 Oeste											
11	VA	No	3	1.000	1.000	2.5	3.1	5	30		
SouthWest: PR-3 Oeste											
52	VA	No	3	1.000	1.000	2.0	2.6	20	15		
53	VA	No	3	1.000	1.000	2.5	3.1	20	15	6	30
South: Villas de Humacao Sur											
32	VA	No	3	1.000	1.000	2.0	2.6	20	15		
33	VA	No	3	1.000	1.000	2.5	3.1	20	15		
East: PR-3 Este											
22	VA	No	3	1.000	1.000	2.0	2.6	5	12		
21	VA	No	3	1.000	1.000	2.5	3.1	5	30		
23	VA	No	3	1.000	1.000	2.5	3.1	5	30	6	30
North: Rampa PR-53 Norte											
42	VA	No	3	1.000	1.000	2.0	2.6	5	12		
41	VA	No	3	1.000	1.000	2.5	3.1	5	30		
43	VA	No	3	1.000	1.000	2.5	3.1	6	30		

Sea View II
InT. PR-3, Rampa PR-53 & Villas de Humacao, Hora Pico AM, 2009
Intersection ID: 4

Scaled sensitivity parameter: Maximum Green

Table V.23 - INTERSECTION SUMMARY FOR VARIABLE PARAMETER SCALE

Param Scale (%)	Cycle Time (sec)	Total Veh. Cap.	Intersn Deg. of Satn	Prac. Spare Cap.	Aver. Delay (sec)	Stop Rate	Longest Queue (veh)	Perf. Index	Cost Total $/h

50	115	8013	1.041	-14	60.3	0.90	35.6	259.6	1226.0
55	120	8116	0.970	-7	57.2	0.86	33.7	255.6	1188.2
60	123	8186	0.934	-4	55.9	0.85	32.6	253.9	1171.4
65	128	8251	0.972	-7	56.4	0.84	32.0	257.0	1175.2
70	132	8297	1.002	-10	57.9	0.83	32.0	261.8	1191.0
75	137	8366	1.040	-13	59.8	0.83	31.9	267.5	1210.1
80	140	8411	1.063	-15	61.0	0.82	31.8	270.9	1222.5
85	147	8451	1.063	-15	62.4	0.82	32.6	277.5	1236.8
90	156	8441	1.030	-13	63.5	0.81	34.5	286.0	1247.8
95	162	8455	1.025	-12	64.8	0.81	35.4	292.1	1261.1
100	167	8473	1.014	-11	65.4	0.81	36.1	296.0	1266.8
105	172	8467	1.005	-10	66.5	0.80	37.1	301.5	1278.0
110	180	8461	0.976	-8	67.2	0.80	38.7	308.2	1284.8
115	185	8455	0.969	-7	68.3	0.80	39.7	313.7	1295.9
120	189	8432	0.957	-6	69.3	0.80	40.9	318.7	1306.2

--- End of aaSIDRA Output ---

Akcelik & Associates Pty Ltd - aaSIDRA 2.0.0.205

Servicios Técnicos Integrados
Francisco J. Reyes Registered User No. 50310
Licence Type: Professional, Single Computer

Time and Date of Analysis 3:04 AM, May 4,2009

Filename: F:\My Documents\Francisco\Consultores\April\Humacao\Sea View II\Sidra\53-VH-3-09PM.OUT

Sea View II
InT. PR-3, Rampa PR-53 & Villas de Humacao, Hora Pico PM, 2009
Intersection ID: 4

aaTraffic SIDRA US Highway Capacity Manual (2000) Version

RUN INFORMATION

Parameter sensitivity run: "Optimum" Maximum Green = 70.0 s

* Basic Parameters:
  Intersection Type: Signalised - Actuated Isolated
  For fully-actuated signal timings, the following specifications will be ignored:
    Any maximum cycle time specification
    Any user-given cycle time (unless phase times also given)
    User-given cycle and phase times (if variable flow scale run)
    Any variable cycle time specification
    Any green split priority specification
  Driving on the right-hand side of the road
  Input data specified in US units
  Default Values File No. 11
  Peak flow period (for performance): 15 minutes
  Unit time (for volumes): 60 minutes (Total Flow Period)
  Delay definition: Control delay
                Geometric delay included
  HCM Delay and Queue Models option selected
  Level of Service based on: Delay (HCM method)
  Queue definition: Back of queue, 95th Percentile

* No. of Main (Timing-Capacity) Iterations = 4
  Comparison of last two iterations:
    Difference in intersection degree of satn = 0.0 %
    Difference in total vehicle capacity = 0.0 %
    Largest difference in eff. green times = 0 secs
    (max. value for stopping = 0 secs)

Sea View II
InT. PR-3, Rampa PR-53 & Villas de Humacao, Hora Pico PM, 2009
Intersection ID: 4
Actuated Isolated Signals, Cycle Time = 130

Table S.3 - INTERSECTION PARAMETERS

Critical Movements: 53(1st), 22, 11, 41, 32

L= 100 Y= 0.103 U= 0.199 T= 125.9

Cycle Time:

Minimum	Maximum	Practical	Chosen
70	NA	125	130

Intersection Level of Service	=	D
Worst movement Level of Service	=	F
Average intersection delay (s)	=	51.0
Largest average movement delay (s)	=	107.7
Largest back of queue, 95% (ft)	=	890
Performance Index	=	238.06
Degree of saturation (highest)	=	0.945
Practical Spare Capacity (lowest)	=	-5 %
Total vehicle capacity, all lanes (veh/h)	=	8405
Total vehicle flow (veh/h)	=	3826
Total person flow (pers/h)	=	4591
Total vehicle delay (veh-h/h)	=	54.23
Total person delay (pers-h/h)	=	65.08
Total effective vehicle stops (veh/h)	=	3145
Total effective person stops (pers/h)	=	3775
Total vehicle travel (veh-mi/h)	=	1593.9
Total cost ($/h)	=	1051.14
Total fuel (ga/h)	=	99.4
Total CO2 (kg/h)	=	941.63

Sea View II
InT. PR-3, Rampa PR-53 & Villas de Humacao, Hora Pico PM, 2009
Intersection ID: 4
Actuated Isolated Signals, Cycle Time = 130

Table S.4 - PHASE INFORMATION

Phase Change Times: 0, 23, 40, 78, 107
Phase Green Times: 20, 14, 35, 26, 20

Current Phase Sequence No.: 1
Input phase sequence: A B C D E
Output phase sequence: A B C D E

Sea View II
InT. PR-3, Rampa PR-53 & Villas de Humacao, Hora Pico PM, 2009
Intersection ID: 4
Actuated Isolated Signals, Cycle Time = 130

Table S.6 - INTERSECTION PERFORMANCE

Total	Deg.	Total	Total	Aver.	Prop.	Eff.	Longest	Perf.	Aver.

Flow (veh/h)	Satn x	Delay (veh-h/h)	Delay (pers-h/h)	Delay (sec)	Queued	Stop Rate	Queue (ft)	Index	Speed (mph)
INTERSECTION (persons):									
4591	0.945		65.08	51.0	0.775	0.82		238.06	27.3

Queue values in this table are 95% back of queue (feet).

Sea View II
InT. PR-3, Rampa PR-53 & Villas de Humacao, Hora Pico PM, 2009
Intersection ID: 4
Actuated Isolated Signals, Cycle Time = 130

Table S.7 - LANE PERFORMANCE

Lane No.	Mov No.	Effective Red and Green Times (sec) R1	G1	R2	G2	Dem Flow (veh /h)	Cap (veh /h)	Deg. Satn x	Aver. Delay (sec)	Eff. Stop Rate	Queue 95% Back (vehs)	(ft)	Shrt Lane (ft)
West: PR-3 Oeste													
1 T	11	95	35	0	0	468	527	0.887	67.9	0.94	35.0	890	
2 T	11	95	35	0	0	468	527	0.887	67.9	0.94	35.0	890	
SouthWest: PR-3 Oeste													
1 L	52	110	20	0	0	269	285	0.945	107.7	0.97	24.0	614	
2 R	53	3	20	13	94	281	1092	0.257	11.9	0.76	3.6	90	
South: Villas de Humacao Sur													
1 L	32	110	20	0	0	177	283	0.625	72.2	0.81	13.7	353	
2 LTR	32, 33	110	20	0	0	170	272	0.625	69.9	0.81	13.3	343	
East: PR-3 Este													
1 L	22	116	14	0	0	69	141	0.489	74.6	0.77	5.7*	164	160
2 T	21	78	52	0	0	553	786	0.703	39.0	0.78	33.1	838	
3 T	21	78	52	0	0	553	786	0.703	39.0	0.78	33.1	838	
4 R	23	3	52	3	72	86	1311	0.066	9.4	0.65	0.3	8	160
North: Rampa PR-53 Norte													
1 L	42	104	26	0	0	185	361	0.514	62.9	0.81	13.3	349	
2 LT	42, 41	104	26	0	0	185	359	0.514	58.8	0.79	13.3	355	
3 R	43	0	130	0	0	364	1674	0.217	9.2	0.65	9.3#		60

\# Density (passenger cars per km or mile)
* Queue length exceeds short lane length due to specification of a percentile queue in the aaSIDRA Configuration File. For calculation of this statistic, you may specify the lane with full length.

Sea View II
InT. PR-3, Rampa PR-53 & Villas de Humacao, Hora Pico PM, 2009
Intersection ID: 4
Actuated Isolated Signals, Cycle Time = 130

Table S.10 - MOVEMENT CAPACITY AND PERFORMANCE SUMMARY

Mov No.	Mov Typ	Dem Flow (veh /h)	Total Cap. (veh /h)	Lane Util (%)	Deg. Satn x	Eff. Grn 1st Grn	Eff. Grn 2nd Grn	Aver. Delay (sec)	Eff. Stop Rate	95% Back of Queue (veh)	Perf. Index
West: PR-3 Oeste											
11	T	935	1054	100	0.887	35*		67.9	0.94	35.0	73.69
SouthWest: PR-3 Oeste											
52	L	269	285	100	0.945*	20		107.7	0.97	24.0	25.72
53	R (Un2)	281	1093	100	0.257	20*	94	11.9	0.76	3.6	6.80
South: Villas de Humacao Sur											
32	L	214	342	100	0.625	20*		72.3	0.81	13.7	16.22
33	TR (Un1)	133	213	100	0.626	20		69.1	0.80	13.3	9.97
East: PR-3 Este											
22	L	69	141<	100	0.489	14*		74.6	0.77	5.7	5.28
21	T	1105	1573	100	0.703	52		39.0	0.78	33.1	67.12
23	R (Und)	86	1310<	100	0.066	52	72	9.4	0.65	0.3	1.58
North: Rampa PR-53 Norte											
42	L	285	555	100	0.514	26		62.9	0.81	13.3	19.95
41	T	85	165	100	0.514	26*		53.7	0.76	13.3	5.71
43	R (Con)	364	1674	100	0.217	130		9.2	0.65	9.3 #	6.02

< Reduced capacity due to a short lane effect
* Maximum degree of saturation, or critical green periods
# Largest density (passenger cars per km or mile) for any lane

---

Sea View II
InT. PR-3, Rampa PR-53 & Villas de Humacao, Hora Pico PM, 2009
Intersection ID: 4
Actuated Isolated Signals, Cycle Time = 130

Table S.14 - SUMMARY OF INPUT AND OUTPUT DATA

Lane No.	Demand Flow (veh/h) L	T	R	Tot	%HV	Adj. Basic Satf.	Eff Grn (secs) 1st	2nd	Deg Sat x	Aver. Delay (sec)	Longest Queue (ft)	Shrt Lane (ft)
West: PR-3 Oeste												
1 T		468		468	2	2000	35		0.887	67.9	890	
2 T		468		468	2	2000	35		0.887	67.9	890	
	0	935	0	935	2				0.887	67.9	890	
SouthWest: PR-3 Oeste												
1 L	269			269	3	2000	20		0.945	107.7	614	
2 R			281	281	2	2000	20	94	0.257	11.9	90	

	269	0	281	550	2				0.945	58.7	614	
South: Villas de Humacao Sur												
1 L	177			177	4	2000	20		0.625	72.2	353	
2 LTR	37	55	78	170	4	2000	20		0.625	69.9	343	
	214	55	78	347	4				0.625	71.1	353	
East: PR-3 Este												
1 L	69			69	19	2000	14		0.489	74.6	164*	160
2 T		553		553	2	2000	52		0.703	39.0	838	
3 T		553		553	2	2000	52		0.703	39.0	838	
4 R			86	86	7	2000	52	72	0.066	9.4	8	160
	69	1105	86	1260	3				0.703	38.9	838	
North: Rampa PR-53 Norte												
1 L	185			185	6	2000	26		0.514	62.9	349	
2 LT	100	85		185	9	2000	26		0.514	58.8	355	
3 R			364	364	2	2000	130		0.217	9.2		60
	285	85	364	734	5				0.514	35.2	355	

ALL VEHICLES	Total Flow	% HV	Cycle Time	Max X	Aver. Delay	Max Queue
	3826	3	130	0.945	51.0	890

Total flow period = 60 minutes. Peak flow period = 15 minutes.

Queue values in this table are 95% back of queue (feet).

Note: Basic Saturation Flows (in through car units) have been adjusted for grade, lane widths, parking manoeuvres and bus stops.

* Queue length exceeds short lane length due to specification of a percentile queue in the aaSIDRA Configuration File. For calculation of this statistic, you may specify the lane with full length.

Sea View II
InT. PR-3, Rampa PR-53 & Villas de Humacao, Hora Pico PM, 2009
Intersection ID: 4
Actuated Isolated Signals, Cycle Time = 130

Table S.15 - CAPACITY AND LEVEL OF SERVICE

Mov No.	Mov Typ	Green Ratio 1st grn	Green Ratio 2nd grn	Total Flow (veh /h)	Total Cap. (veh /h)	Deg. of Satn (v/c)	Aver. Delay (sec)	LOS
West: PR-3 Oeste								
11	T	0.269*		935	1054	0.887	67.9	E
				935	1054	0.887	67.9	E

SouthWest: PR-3 Oeste							
52 L		0.154		269	285	0.945*	107.7	F
53 R	(Un2)	0.154*	0.723	281	1093	0.257	11.9	B
				550	1377	0.945	58.7	E
South: Villas de Humacao Sur								
32 L		0.154*		214	342	0.625	72.3	E
33 TR	(Un1)	0.154		133	213	0.626	69.1	E
				347	555	0.626	71.1	E
East: PR-3 Este								
22 L		0.108*		69	141<	0.489	74.6	E
21 T		0.400		1105	1573	0.703	39.0	D
23 R	(Und)	0.400	0.554	86	1310<	0.066	9.4	A
				1260	3024	0.703	38.9	D
North: Rampa PR-53 Norte								
42 L		0.200		285	555	0.514	62.9	E
41 T		0.200*		85	165	0.514	53.7	D
43 R	(Con)	1.000		364	1674	0.217	9.2	A#
				734	2394	0.514	35.2	D
ALL VEHICLES:				3826	8405	0.945	51.0	D
INTERSECTION (persons):				4591	8405	0.945	51.0	

Level of Service calculations are based on
average control delay including geometric delay (HCM criteria),
independent of the current delay definition used.
For the criteria, refer to the "Level of Service" topic in the
aaSIDRA Output Guide or the Output section of the on-line help.

\# Level Of Service for continuous movements based on density
< Reduced capacity due to a short lane effect
* Maximum v/c ratio, or critical green periods

Sea View II
InT. PR-3, Rampa PR-53 & Villas de Humacao, Hora Pico PM, 2009
Intersection ID: 4

Table S.23 - SENSITIVITY ANALYSIS RESULTS

Performance Measure	Smallest Value	Param Scale
Degree of Satn	0.916	120
Average Delay	51.0	70
Stop Rate	0.79	100
Max. Queue for Any Movement	34.7	75

Perf. Index	238.1	70
Cost total	1050.8	75

Performance Measure	Largest Value	Param Scale
Total Vehicle Cap.	8602	100
Prac. Spare Cap.	-2	120

Sea View II
InT. PR-3, Rampa PR-53 & Villas de Humacao, Hora Pico PM, 2009
Intersection ID: 4
Actuated Isolated Signals, Cycle Time = 130

Table D.5 - PROGRESSION FACTORS & ACTUATED SIGNAL PARAMETERS

Mov No.	Control	Coord.	Arrival Type	Delay Prog. Factor	Queue Prog. Factor	Gap Settings es	Gap Settings eh	Disp. Grn. Settings 1st Grn Gmin	1st Grn Gmax	2nd Grn Gmin	2nd Grn Gmax
West: PR-3 Oeste											
11	VA	No	3	1.000	1.000	2.5	3.1	5	35		
SouthWest: PR-3 Oeste											
52	VA	No	3	1.000	1.000	2.0	2.6	20	18		
53	VA	No	3	1.000	1.000	2.5	3.1	20	18	6	35
South: Villas de Humacao Sur											
32	VA	No	3	1.000	1.000	2.0	2.6	20	18		
33	VA	No	3	1.000	1.000	2.5	3.1	20	18		
East: PR-3 Este											
22	VA	No	3	1.000	1.000	2.0	2.6	5	14		
21	VA	No	3	1.000	1.000	2.5	3.1	5	35		
23	VA	No	3	1.000	1.000	2.5	3.1	5	35	6	35
North: Rampa PR-53 Norte											
42	VA	No	3	1.000	1.000	2.0	2.6	5	14		
41	VA	No	3	1.000	1.000	2.5	3.1	5	35		
43	VA	No	3	1.000	1.000	2.5	3.1	6	35		

Sea View II
InT. PR-3, Rampa PR-53 & Villas de Humacao, Hora Pico PM, 2009
Intersection ID: 4

Scaled sensitivity parameter: Maximum Green

Table V.23 - INTERSECTION SUMMARY FOR VARIABLE PARAMETER SCALE

Param Scale	Cycle Time	Total Veh.	Intersn Deg. of	Prac. Spare	Aver. Delay	Stop Rate	Longest Queue	Perf. Index	Cost Total

(%)	(sec)	Cap.	Satn	Cap.	(sec)		(veh)		$/h
50	114	8107	1.089	-17	62.5	0.93	40.3	254.3	1182.6
55	118	8217	1.006	-11	55.7	0.88	37.4	242.5	1106.6
60	122	8284	0.971	-7	53.9	0.86	36.6	240.8	1085.3
65	127	8352	0.923	-3	51.9	0.83	35.5	238.9	1061.5
70	130	8405	0.945	-5	51.0	0.82	35.0	238.1	1051.1
75	135	8476	0.981	-8	51.1	0.81	34.7	240.2	1050.8
80	139	8517	1.011	-11	51.9	0.80	35.0	243.4	1058.4
85	146	8558	1.011	-11	53.0	0.79	35.8	249.1	1068.2
90	154	8554	0.974	-8	54.6	0.79	37.5	257.2	1083.4
95	161	8589	0.975	-8	55.8	0.79	38.4	263.2	1095.1
100	167	8602	0.971	-7	57.1	0.79	39.4	269.1	1108.1
105	172	8595	0.962	-6	58.5	0.79	40.6	275.1	1122.2
110	180	8589	0.935	-4	60.4	0.79	42.3	283.8	1140.7
115	185	8582	0.928	-3	61.9	0.79	43.5	289.8	1155.4
120	189	8581	0.916	-2	62.8	0.79	44.4	293.9	1164.5

--- End of aaSIDRA Output ---

Akcelik & Associates Pty Ltd - aaSIDRA 2.0.0.205

Servicios Técnicos Integrados
Francisco J. Reyes Registered User No. 50310
Licence Type: Professional, Single Computer

Time and Date of Analysis 2:54 AM, May 4,2009

Filename: F:\My Documents\Francisco\Consultores\April\Humacao\Sea View II\Sidra\925-3-09AM.OUT

Sea View II
Intersecci?n PR-925 & PR-3; Hora Pico AM, 2009
Intersection ID: 1

aaTraffic SIDRA US Highway Capacity Manual (2000) Version

RUN INFORMATION

* Basic Parameters:
  Intersection Type: Unsignalised - Two-Way Stop Control
  Driving on the right-hand side of the road
  Input data specified in US units
  Default Values File No. 11
  Peak flow period (for performance): 15 minutes
  Unit time (for volumes): 60 minutes (Total Flow Period)
  Delay definition: Control delay
  Geometric delay included
  HCM Delay and Queue Models option selected
  Level of Service based on: Delay (HCM method)
  Queue definition: Back of queue, 95th Percentile

Sea View II
Intersecci?n PR-925 & PR-3; Hora Pico AM, 2009
Intersection ID: 1
Stop Sign Controlled Intersection

Table S.3 - INTERSECTION PARAMETERS

Intersection Level of Service	=	D
Worst movement Level of Service	=	F
Average intersection delay (s)	=	32.0
Largest average movement delay (s)	=	188.6
Largest back of queue, 95% (ft)	=	755
Performance Index	=	50.53
Degree of saturation (highest)	=	1.234
Practical Spare Capacity (lowest)	=	-35
Total vehicle capacity, all lanes (veh/h)	=	3578
Total vehicle flow (veh/h)	=	1728
Total person flow (pers/h)	=	2074
Total vehicle delay (veh-h/h)	=	15.35
Total person delay (pers-h/h)	=	18.42

Total effective vehicle stops (veh/h)	=	682
Total effective person stops (pers/h)	=	818
Total vehicle travel (veh-mi/h)	=	719.6
Total cost ($/h)	=	393.07
Total fuel (ga/h)	=	37.9
Total CO2 (kg/h)	=	359.19

Sea View II
Intersecci?n PR-925 & PR-3; Hora Pico AM, 2009
Intersection ID: 1
Stop Sign Controlled Intersection

Table S.6 - INTERSECTION PERFORMANCE

Total Flow (veh/h)	Deg. Satn x	Total Delay (veh-h/h)	Total Delay (pers-h/h)	Aver. Delay (sec)	Prop. Queued	Eff. Stop Rate	Longest Queue (ft)	Perf. Index	Aver. Speed (mph)
INTERSECTION (persons):									
2074	1.234		18.42	32.0	0.520	0.39		50.53	34.4

Queue values in this table are 95% back of queue (feet).

Sea View II
Intersecci?n PR-925 & PR-3; Hora Pico AM, 2009
Intersection ID: 1
Stop Sign Controlled Intersection

Table S.7 - LANE PERFORMANCE

Lane No.	Mov No.	Dem Flow (veh /h)	Cap (veh /h)	Deg. Satn x	Aver. Delay (sec)	Eff. Stop Rate	Queue 95% Back (vehs)	Queue 95% Back (ft)	Short Lane (ft)
West: PR-3 Oeste									
1 LT	12	645	1429	0.451	10.9	0.20	8.0	207	
East: PR-3 Este									
1 TR	22, 23	830	1945	0.427	0.6	0.04	0.0	0	
North: PR-925 Norte									
1 LR	42, 43	253	204	1.238	188.6	2.04	28.8	755	

Sea View II
Intersecci?n PR-925 & PR-3; Hora Pico AM, 2009
Intersection ID: 1
Stop Sign Controlled Intersection

Table S.10 - MOVEMENT CAPACITY AND PERFORMANCE SUMMARY

Mov No.	Mov Typ	Dem Flow (veh /h)	Total Cap. (veh /h)	Lane Util (%)	Deg. Satn x	Aver. Delay (sec)	Eff. Stop Rate	95% Back of Queue (veh)	Perf. Index
West: PR-3 Oeste									
12	LT	645	1429	100	0.451	10.9	0.20	8.0	12.04
East: PR-3 Este									
22	T	778	1823	100	0.427	0.0	0.00	0.0	8.12
23	R	52	122	100	0.426	9.9	0.72	0.0	0.89
North: PR-925 Norte									
42	L	79	64	100	1.234*	188.6	1.95	28.8	9.17
43	R	174	141	100	1.234*	188.6	2.08	28.8	20.32

* Maximum degree of saturation

Sea View II
Intersecci?n PR-925 & PR-3; Hora Pico AM, 2009
Intersection ID: 1
Stop Sign Controlled Intersection

Table S.14 - SUMMARY OF INPUT AND OUTPUT DATA

Lane No.	Demand Flow (veh/h) L	T	R	Tot	%HV	Adj. Basic Satf.	Eff Grn (secs) 1st	2nd	Deg Sat x	Aver. Delay (sec)	Longest Queue (ft)	Shrt Lane (ft)
West: PR-3 Oeste												
1 LT	116	529		645	5				0.451	10.9	207	
	116	529	0	645	5				0.451	10.9	207	
East: PR-3 Este												
1 TR		778	52	830	2				0.427	0.6	0	
	0	778	52	830	2				0.427	0.6		
North: PR-925 Norte												
1 LR	79		174	253	6				1.238	188.6	755	
	79	0	174	253	6				1.238	188.6	755	

ALL VEHICLES	Total Flow	% HV	Max X	Aver. Delay	Max Queue
	1728	3	1.234	32.0	755

Total flow period = 60 minutes. Peak flow period = 15 minutes.

Queue values in this table are 95% back of queue (feet).

Note: Basic Saturation Flows are not adjusted at roundabouts or sign-controlled intersections and apply only to continuous lanes.

Sea View II
Intersecci?n PR-925 & PR-3; Hora Pico AM, 2009
Intersection ID: 1
Stop Sign Controlled Intersection

Table S.15 - CAPACITY AND LEVEL OF SERVICE

Mov No.	Mov Typ	Total Flow (veh /h)	Total Cap. (veh /h)	Deg. of Satn (v/c)	Aver. Delay (sec)	LOS
West: PR-3 Oeste						
12	LT	645	1429	0.451	10.9	B
		645	1429	0.451	10.9	B
East: PR-3 Este						
22	T	778	1823	0.427	0.0	A
23	R	52	122	0.426	9.9	A
		830	1945	0.427	0.6	A
North: PR-925 Norte						
42	L	79	64	1.234*	188.6	F
43	R	174	141	1.234*	188.6	F
		253	205	1.234	188.6	F
ALL VEHICLES:		1728	3578	1.234	32.0	D

Level of Service calculations are based on average control delay including geometric delay (HCM criteria), independent of the current delay definition used.
For the criteria, refer to the "Level of Service" topic in the aaSIDRA Output Guide or the Output section of the on-line help.
* Maximum v/c ratio, or critical green periods

--- End of aaSIDRA Output ---

Akcelik & Associates Pty Ltd - aaSIDRA 2.0.0.205

Servicios Técnicos Integrados
Francisco J. Reyes Registered User No. 50310
Licence Type: Professional, Single Computer

Time and Date of Analysis 3:08 AM, May 4,2009

Filename: F:\My Documents\Francisco\Consultores\April\Humacao\Sea View II\Sidra\925-3-09PM.OUT

Sea View II
Intersecci?n PR-925 & PR-3; Hora Pico PM, 2009
Intersection ID: 1

aaTraffic SIDRA US Highway Capacity Manual (2000) Version

RUN INFORMATION

* Basic Parameters:
  Intersection Type: Unsignalised - Two-Way Stop Control
  Driving on the right-hand side of the road
  Input data specified in US units
  Default Values File No. 11
  Peak flow period (for performance): 15 minutes
  Unit time (for volumes): 60 minutes (Total Flow Period)
  Delay definition: Control delay
  Geometric delay included
  HCM Delay and Queue Models option selected
  Level of Service based on: Delay (HCM method)
  Queue definition: Back of queue, 95th Percentile

Sea View II
Intersecci?n PR-925 & PR-3; Hora Pico PM, 2009
Intersection ID: 1
Stop Sign Controlled Intersection

Table S.3 - INTERSECTION PARAMETERS

Intersection Level of Service	=	A
Worst movement Level of Service	=	E
Average intersection delay (s)	=	8.8
Largest average movement delay (s)	=	44.9
Largest back of queue, 95% (ft)	=	239
Performance Index	=	27.10
Degree of saturation (highest)	=	0.640
Practical Spare Capacity (lowest)	=	25
Total vehicle capacity, all lanes (veh/h)	=	3759
Total vehicle flow (veh/h)	=	1548
Total person flow (pers/h)	=	1858
Total vehicle delay (veh-h/h)	=	3.78
Total person delay (pers-h/h)	=	4.54

Total effective vehicle stops (veh/h)	=	385
Total effective person stops (pers/h)	=	462
Total vehicle travel (veh-mi/h)	=	644.7
Total cost ($/h)	=	256.60
Total fuel (ga/h)	=	30.5
Total CO2 (kg/h)	=	289.13

Sea View II
Intersecci?n PR-925 & PR-3; Hora Pico PM, 2009
Intersection ID: 1
Stop Sign Controlled Intersection

Table S.6 - INTERSECTION PERFORMANCE

Total Flow (veh/h)	Deg. Satn x	Total Delay (veh-h/h)	Total Delay (pers-h/h)	Aver. Delay (sec)	Prop. Queued	Eff. Stop Rate	Longest Queue (ft)	Perf. Index	Aver. Speed (mph)
INTERSECTION (persons):									
1858	0.640		4.54	8.8	0.550	0.25		27.10	50.8

Queue values in this table are 95% back of queue (feet).

Sea View II
Intersecci?n PR-925 & PR-3; Hora Pico PM, 2009
Intersection ID: 1
Stop Sign Controlled Intersection

Table S.7 - LANE PERFORMANCE

Lane No.	Mov No.	Dem Flow (veh /h)	Cap (veh /h)	Deg. Satn x	Aver. Delay (sec)	Eff. Stop Rate	Queue 95% Back (vehs)	Queue 95% Back (ft)	Short Lane (ft)
West: PR-3 Oeste									
1 LT	12	816	1624	0.503	7.8	0.19	9.4	239	
East: PR-3 Este									
1 TR	22, 23	585	1906	0.307	1.1	0.08	0.0	0	
North: PR-925 Norte									
1 LR	42, 43	147	230	0.640	44.9	1.23	5.8	156	

Sea View II
Intersecci?n PR-925 & PR-3; Hora Pico PM, 2009
Intersection ID: 1
Stop Sign Controlled Intersection

Table S.10 - MOVEMENT CAPACITY AND PERFORMANCE SUMMARY

Mov No.	Mov Typ	Dem Flow (veh /h)	Total Cap. (veh /h)	Lane Util (%)	Deg. Satn x	Aver. Delay (sec)	Eff. Stop Rate	95% Back of Queue (veh)	Perf. Index
West: PR-3 Oeste									
12	LT	816	1624	100	0.502	7.8	0.19	9.4	14.29
East: PR-3 Este									
22	T	520	1694	100	0.307	0.0	0.00	0.0	5.42
23	R	65	212	100	0.307	9.9	0.72	0.0	1.11
North: PR-925 Norte									
42	L	58	91	100	0.637	44.9	1.20	5.8	2.46
43	R	89	139	100	0.640*	44.9	1.25	5.8	3.81

* Maximum degree of saturation

Sea View II
Intersecci?n PR-925 & PR-3; Hora Pico PM, 2009
Intersection ID: 1
Stop Sign Controlled Intersection

Table S.14 - SUMMARY OF INPUT AND OUTPUT DATA

Lane No.	Demand Flow (veh/h) L	T	R	Tot	%HV	Adj. Basic Satf.	Eff Grn (secs) 1st	2nd	Deg Sat x	Aver. Delay (sec)	Longest Queue (ft)	Shrt Lane (ft)
West: PR-3 Oeste												
1 LT	144	672		816	3				0.503	7.8	239	
	144	672	0	816	3				0.503	7.8	239	
East: PR-3 Este												
1 TR		520	65	585	3				0.307	1.1	0	
	0	520	65	585	3				0.307	1.1		
North: PR-925 Norte												
1 LR	58		89	147	9				0.640	44.9	156	
	58	0	89	147	9				0.640	44.9	156	

ALL VEHICLES	Total Flow	% HV	Max X	Aver. Delay	Max Queue
	1548	4	0.640	8.8	239

Total flow period = 60 minutes. Peak flow period = 15 minutes.

Queue values in this table are 95% back of queue (feet).

Note: Basic Saturation Flows are not adjusted at roundabouts or sign-controlled intersections and apply only to continuous lanes.

Sea View II
Intersecci?n PR-925 & PR-3; Hora Pico PM, 2009
Intersection ID: 1
Stop Sign Controlled Intersection

Table S.15 - CAPACITY AND LEVEL OF SERVICE

Mov No.	Mov Typ	Total Flow (veh /h)	Total Cap. (veh /h)	Deg. of Satn (v/c)	Aver. Delay (sec)	LOS
West: PR-3 Oeste						
12	LT	816	1624	0.502	7.8	A
		816	1624	0.502	7.8	A
East: PR-3 Este						
22	T	520	1694	0.307	0.0	A
23	R	65	212	0.307	9.9	A
		585	1906	0.307	1.1	A
North: PR-925 Norte						
42	L	58	91	0.637	44.9	E
43	R	89	139	0.640*	44.9	E
		147	230	0.640	44.9	E
ALL VEHICLES:		1548	3759	0.640	8.8	A

Level of Service calculations are based on average control delay including geometric delay (HCM criteria), independent of the current delay definition used.
For the criteria, refer to the "Level of Service" topic in the aaSIDRA Output Guide or the Output section of the on-line help.
* Maximum v/c ratio, or critical green periods

--- End of aaSIDRA Output ---

Akcelik & Associates Pty Ltd - aaSIDRA 2.0.0.205

Servicios Técnicos Integrados
Francisco J. Reyes Registered User No. 50310
Licence Type: Professional, Single Computer

Time and Date of Analysis 2:58 AM, May 4,2009

Filename: F:\My Documents\Francisco\Consultores\April\Humacao\Sea View II\Sidra\925-3-53-09AM.OUT

Sea View II
Int. PR-3, PR-925 & Rampa PR-53; Hora Pico AM, 2009
Intersection ID: 5

aaTraffic SIDRA US Highway Capacity Manual (2000) Version

RUN INFORMATION

Parameter sensitivity run: "Optimum" Maximum Green = 60.0 %

* Basic Parameters:
  Intersection Type: Signalised - Actuated Isolated
  For fully-actuated signal timings, the following specifications will be ignored:
    Any maximum cycle time specification
    Any user-given cycle time (unless phase times also given)
    User-given cycle and phase times (if variable flow scale run)
    Any variable cycle time specification
    Any green split priority specification
  Driving on the right-hand side of the road
  Input data specified in US units
  Default Values File No. 11
  Peak flow period (for performance): 15 minutes
  Unit time (for volumes): 60 minutes (Total Flow Period)
  Delay definition: Control delay
                Geometric delay included
  HCM Delay and Queue Models option selected
  Level of Service based on: Delay (HCM method)
  Queue definition: Back of queue, 95th Percentile

* No. of Main (Timing-Capacity) Iterations = 2
  Comparison of last two iterations:
    Difference in intersection degree of satn = 0.0 %
    Difference in total vehicle capacity = 0.0 %
    Largest difference in eff. green times = 0 secs
    (max. value for stopping = 0 secs)

Sea View II
Int. PR-3, PR-925 & Rampa PR-53; Hora Pico AM, 2009
Intersection ID: 5
Actuated Isolated Signals, Cycle Time = 94

Table S.3 - INTERSECTION PARAMETERS

Critical Movements: 12, 21, 43(1st), 31(2nd)

L= 70 Y= 0.146 U= 0.168 T= 85.8

Cycle Time:

Minimum	Maximum	Practical	Chosen
54	NA	85	94

Intersection Level of Service	=	D
Worst movement Level of Service	=	E
Average intersection delay (s)	=	42.4
Largest average movement delay (s)	=	77.8
Largest back of queue, 95% (ft)	=	616
Performance Index	=	245.85
Degree of saturation (highest)	=	0.997
Practical Spare Capacity (lowest)	=	-10 %
Total vehicle capacity, all lanes (veh/h)	=	9034
Total vehicle flow (veh/h)	=	4668
Total person flow (pers/h)	=	5602
Total vehicle delay (veh-h/h)	=	54.96
Total person delay (pers-h/h)	=	65.96
Total effective vehicle stops (veh/h)	=	3878
Total effective person stops (pers/h)	=	4653
Total vehicle travel (veh-mi/h)	=	2034.4
Total cost ($/h)	=	1216.83
Total fuel (ga/h)	=	128.7
Total CO2 (kg/h)	=	1218.97

Sea View II
Int. PR-3, PR-925 & Rampa PR-53; Hora Pico AM, 2009
Intersection ID: 5
Actuated Isolated Signals, Cycle Time = 94

Table S.4 - PHASE INFORMATION

Phase Change Times: 0, 24, 58, 74
Phase Green Times: 20, 30, 12, 16

Current Phase Sequence No.: 1
Input phase sequence: A B C D
Output phase sequence: A B C D

Sea View II
Int. PR-3, PR-925 & Rampa PR-53; Hora Pico AM, 2009
Intersection ID: 5
Actuated Isolated Signals, Cycle Time = 94

Table S.6 - INTERSECTION PERFORMANCE

Total	Deg.	Total	Total	Aver.	Prop.	Eff.	Longest	Perf.	Aver.

Flow (veh/h)	Satn x	Delay (veh-h/h)	Delay (pers-h/h)	Delay (sec)	Queued	Stop Rate	Queue (ft)	Index	Speed (mph)
INTERSECTION (persons):									
5602	0.997		65.96	42.4	0.853	0.83		245.85	31.3

Queue values in this table are 95% back of queue (feet).

Sea View II
Int. PR-3, PR-925 & Rampa PR-53; Hora Pico AM, 2009
Intersection ID: 5
Actuated Isolated Signals, Cycle Time = 94

Table S.7 - LANE PERFORMANCE

Lane No.	Mov No.	Effective Red and Green Times (sec) R1	G1	R2	G2	Dem Flow (veh /h)	Cap (veh /h)	Deg. Satn x	Aver. Delay (sec)	Eff. Stop Rate	Queue 95% Back (vehs)	(ft)	Shrt Lane (ft)
West: PR-3 Oeste													
1 L	12	74	20	0	0	243	244	0.997	49.2r	0.82	12.2*	308	160
2 T	11	64	30	0	0	415	616	0.673	34.2	0.78	20.5	526	
3 T	11	64	30	0	0	415	616	0.673	34.2	0.78	20.5	526	
4 TR	11, 13	58	30	4	2	411	610	0.673	33.8	0.80	19.0	484	
South: Ramp PR-53 Sur													
1 L	32	78	16	0	0	257	322	0.799	66.6	0.88	15.8	396	
2 LT	32, 31	4	1	73	16	263	329	0.799	63.1	0.89	15.8	397	
3 R	33	0	94	0	0	106	1678	0.063	9.2	0.65	2.7#		60
East: PR-3 Este													
1 L	22	74	20	0	0	352	391	0.900	74.7	0.97	22.2*	572	400
2 T	21	64	30	0	0	475	627	0.758	37.8	0.83	24.3	616	
3 T	21	64	30	0	0	475	627	0.758	37.8	0.83	24.3	616	
4 T	21	64	30	0	0	475	627	0.758	37.8	0.83	24.3	616	
5 R	23	0	94	0	0	242	1690	0.143	10.3	0.67	5.4#		400
North: PR-925 Norte													
1 LT	42, 41	82	12	0	0	204	245	0.833	72.6	0.88	13.5	343	
2 R	41, 43	4	12	36	42	335	410	0.816	34.5	0.92	13.9*	348	200

\# Density (passenger cars per km or mile)
* Queue length exceeds short lane length due to specification of a percentile queue in the aaSIDRA Configuration File. For calculation of this statistic, you may specify the lane with full length.
r Delay, stops and queue length for this lane have been cut down to fit in the queuing space. The amount cut may not be accounted for fully in the adjacent lane performance statistics. You may wish to change the short lane to a full lane to investigate the extent of this effect.

Sea View II
Int. PR-3, PR-925 & Rampa PR-53; Hora Pico AM, 2009
Intersection ID: 5
Actuated Isolated Signals, Cycle Time = 94

Table S.10 - MOVEMENT CAPACITY AND PERFORMANCE SUMMARY

Mov No.	Mov Typ	Dem Flow (veh /h)	Total Cap. (veh /h)	Lane Util (%)	Deg. Satn x	Eff. Grn 1st Grn	Eff. Grn 2nd Grn	Aver. Delay (sec)	Eff. Stop Rate	95% Back of Queue (veh)	Perf. Index
West: PR-3 Oeste											
12 L		243	244<	100	0.997*	20*		49.2	0.82	12.2	13.10
11 T		1062	1578	100	0.673	30		33.1	0.78	20.5	53.05
13 R		178	264	100	0.674	30	56	39.8	0.85	19.0	9.01
South: Ramp PR-53 Sur											
32 L		483	605	100	0.799	16		65.4	0.89	15.8	31.45
31 T		37	47	100	0.793	70	16*	54.2	0.85	15.8	2.27
33 R	(Con)	106	1678	100	0.063	94		9.2	0.65	2.7 #	1.75
East: PR-3 Este											
22 L		352	391	100	0.900	20		74.7	0.97	22.2	24.92
21 T		1426	1882	100	0.758	30*		37.8	0.83	24.3	76.36
23 R	(Con)	242	1690	100	0.143	94		10.3	0.67	5.4 #	3.93
North: PR-925 Norte											
42 L		92	110	100	0.833	12		77.8	0.87	13.5	6.52
41 T		112	134	98	0.833	12		67.9	0.88	13.5	7.64
43 R	(Un2)	335	410<	98	0.816	12*	42	34.5	0.92	13.9	15.84

< Reduced capacity due to a short lane effect
* Maximum degree of saturation, or critical green periods
# Largest density (passenger cars per km or mile) for any lane

---

Sea View II
Int. PR-3, PR-925 & Rampa PR-53; Hora Pico AM, 2009
Intersection ID: 5
Actuated Isolated Signals, Cycle Time = 94

Table S.14 - SUMMARY OF INPUT AND OUTPUT DATA

Lane No.	Demand Flow (veh/h) L	T	R	Tot	%HV	Adj. Basic Satf.	Eff Grn (secs) 1st	2nd	Deg Sat x	Aver. Delay (sec)	Longest Queue (ft)	Shrt Lane (ft)
West: PR-3 Oeste												
1 L	243			243	1	2000	20		0.997	49.2r	308*	160
2 T		415		415	4	2000	30		0.673	34.2	526	
3 T		415		415	4	2000	30		0.673	34.2	526	
4 TR		233	178	411	2	2000	30	2	0.673	33.8	484	

		243	1062	178	1483	3				0.997	36.6	526	
South:	Ramp PR-53 Sur												
1	L	257			257	1	2000	16		0.799	66.6	396	
2	LT	226	37		263	1	2000	1	16	0.799	63.1	397	
3	R			106	106	2	2000	94		0.063	9.2		60
		483	37	106	626	1				0.799	55.4	397	250d
East:	PR-3 Este												
1	L	352			352	4	2000	20		0.900	74.7	572*	400
2	T		475		475	2	2000	30		0.758	37.8	616	
3	T		475		475	2	2000	30		0.758	37.8	616	
4	T		475		475	2	2000	30		0.758	37.8	616	
5	R			242	242	1	2000	94		0.143	10.3		400
		352	1426	242	2020	2				0.900	40.9	616	
North:	PR-925 Norte												
1	LT	92	112		204	2	2000	12		0.833	72.6	343	
2	R			335	335	1	2000	12	42	0.816	34.5	348*	200
		92	112	335	539	1				0.833	48.9	348	250d

ALL VEHICLES	Total Flow	% HV	Cycle Time	Max X	Aver. Delay	Max Queue
	4668	2	94	0.997	42.4	616

Total flow period = 60 minutes. Peak flow period = 15 minutes.

Queue values in this table are 95% back of queue (feet).

Note: Basic Saturation Flows (in through car units) have been adjusted for grade, lane widths, parking manoeuvres and bus stops.

* Queue length exceeds short lane length due to specification of a percentile queue in the aaSIDRA Configuration File. For calculation of this statistic, you may specify the lane with full length.

d Short lane length on departure side.

r Delay, stops and queue length for this lane have been cut down to fit in the queuing space. The amount cut may not be accounted for fully in the adjacent lane performance statistics. You may wish to change the short lane to a full lane to investigate the extent of this effect.

Sea View II
Int. PR-3, PR-925 & Rampa PR-53; Hora Pico AM, 2009
Intersection ID: 5
Actuated Isolated Signals, Cycle Time = 94

Table S.15 - CAPACITY AND LEVEL OF SERVICE

Mov No.	Mov Typ	Green Time Ratio (g/C)	Total Flow	Total Cap.	Deg. of	Aver. Delay	LOS

	1st grn	2nd grn	(veh /h)	(veh /h)	Satn (v/c)	(sec)	
West: PR-3 Oeste							
12 L	0.213*		243	244<	0.997*	49.2	D
11 T	0.319		1062	1578	0.673	33.1	C
13 R	0.319	0.596	178	264	0.674	39.8	D
			1483	2086	0.997	36.6	D
South: Ramp PR-53 Sur							
32 L	0.170		483	605	0.799	65.4	E
31 T	0.745	0.170*	37	47	0.793	54.2	D
33 R (Con)	1.000		106	1678	0.063	9.2	A#
			626	2329	0.799	55.2	E
East: PR-3 Este							
22 L	0.213		352	391	0.900	74.7	E
21 T	0.319*		1426	1882	0.758	37.8	D
23 R (Con)	1.000		242	1690	0.143	10.3	A#
			2020	3963	0.900	40.9	D
North: PR-925 Norte							
42 L	0.128		92	110	0.833	77.8	E
41 T	0.128		112	134	0.833	67.9	E
43 R (Un2)	0.128*	0.447	335	410<	0.816	34.5	C
			539	655	0.833	48.9	D
ALL VEHICLES:			4668	9034	0.997	42.4	D
INTERSECTION (persons):			5602	9034	0.997	42.4	

Level of Service calculations are based on
average control delay including geometric delay (HCM criteria),
independent of the current delay definition used.
For the criteria, refer to the "Level of Service" topic in the
aaSIDRA Output Guide or the Output section of the on-line help.

\# Level Of Service for continuous movements based on density
< Reduced capacity due to a short lane effect
* Maximum v/c ratio, or critical green periods

Sea View II
Int. PR-3, PR-925 & Rampa PR-53; Hora Pico AM, 2009
Intersection ID: 5

Table S.23 - SENSITIVITY ANALYSIS RESULTS

Performance Measure	Smallest Value	Param Scale

Degree of Satn	0.904	50
Average Delay	42.4	60
Stop Rate	0.83	65
Max. Queue for Any Movement	23.9	50
Perf. Index	240.7	50
Cost total	1216.8	60

Performance Measure	Largest Value	Param Scale
Total Vehicle Cap.	9162	75
Prac. Spare Cap.	0	50

Sea View II
Int. PR-3, PR-925 & Rampa PR-53; Hora Pico AM, 2009
Intersection ID: 5
Actuated Isolated Signals, Cycle Time = 94

Table D.5 - PROGRESSION FACTORS & ACTUATED SIGNAL PARAMETERS

Mov No.	Control	Coord.	Arrival Type	Delay Prog. Factor	Queue Prog. Factor	Gap Settings es	Gap Settings eh	Disp. Grn. Settings 1st Grn Gmin	1st Grn Gmax	2nd Grn Gmin	2nd Grn Gmax
West: PR-3 Oeste											
12	VA	No	3	1.000	1.000	2.0	2.5	20	12		
11	VA	No	3	1.000	1.000	2.5	3.0	6	30		
13	VA	No	3	1.000	1.000	2.5	3.0	6	30	6	30
South: Ramp PR-53 Sur											
32	VA	No	3	1.000	1.000	2.0	2.5	6	12		
31	VA	No	3	1.000	1.000	2.5	3.0	6	30	6	30
33	VA	No	3	1.000	1.000	2.5	3.1	6	30		
East: PR-3 Este											
22	VA	No	3	1.000	1.000	2.0	2.5	20	12		
21	VA	No	3	1.000	1.000	2.5	3.0	6	30		
23	VA	No	3	1.000	1.000	2.5	3.0	6	30		
North: PR-925 Norte											
42	VA	No	3	1.000	1.000	2.0	2.5	6	12		
41	VA	No	3	1.000	1.000	2.5	3.0	6	12		
43	VA	No	3	1.000	1.000	2.5	3.1	6	12	6	30

Sea View II
Int. PR-3, PR-925 & Rampa PR-53; Hora Pico AM, 2009
Intersection ID: 5

Scaled sensitivity parameter: Maximum Green

Table V.23 - INTERSECTION SUMMARY FOR VARIABLE PARAMETER SCALE

Param Scale (%)	Cycle Time (sec)	Total Veh. Cap.	Intersn Deg. of Satn	Prac. Spare Cap.	Aver. Delay (sec)	Stop Rate	Longest Queue (veh)	Perf. Index	Cost Total $/h
50	85	8809	0.904	0	42.8	0.86	23.9	240.7	1221.4
55	91	8941	0.961	-6	42.5	0.84	24.3	244.3	1217.5
60	94	9034	0.997	-10	42.4	0.83	24.3	245.9	1216.8
65	97	9118	1.000	-10	43.1	0.83	24.4	249.4	1227.1
70	99	9140	1.465	-39	62.9	0.88	47.0	295.1	1467.7
75	101	9162	1.402	-36	61.7	0.88	45.4	294.6	1452.8
80	103	9110	1.343	-33	60.6	0.88	43.8	295.1	1439.0
85	105	9130	1.295	-30	59.9	0.87	42.6	295.5	1431.4
90	108	9132	1.266	-29	59.5	0.87	42.2	297.6	1426.1
95	111	9134	1.241	-27	59.3	0.87	41.9	300.2	1424.0
100	113	9084	1.204	-25	59.0	0.87	40.9	302.0	1419.0
105	118	9109	1.208	-25	60.0	0.86	42.3	308.4	1432.2
110	121	9037	1.185	-24	60.4	0.86	41.9	312.5	1436.6
115	125	9015	1.177	-24	61.2	0.86	42.6	318.0	1447.0
120	130	9039	1.184	-24	62.2	0.86	44.1	324.3	1460.6

--- End of aaSIDRA Output ---

Akcelik & Associates Pty Ltd - aaSIDRA 2.0.0.205

Servicios Técnicos Integrados
Francisco J. Reyes Registered User No. 50310
Licence Type: Professional, Single Computer

Time and Date of Analysis 3:58 AM, May 4,2009

Filename: F:\My Documents\Francisco\Consultores\April\Humacao\Sea View II\Sidra\925-3-53-09PM.OUT

Sea View II
Int. PR-3, PR-925 & Rampa PR-53; Hora Pico PM, 2009
Intersection ID: 5

aaTraffic SIDRA US Highway Capacity Manual (2000) Version

RUN INFORMATION

Parameter sensitivity run: "Optimum" Maximum Green = 85.0 s

* Basic Parameters:
  Intersection Type: Signalised - Actuated Isolated
  For fully-actuated signal timings, the following specifications will be ignored:
    Any maximum cycle time specification
    Any user-given cycle time (unless phase times also given)
    User-given cycle and phase times (if variable flow scale run)
    Any variable cycle time specification
    Any green split priority specification
  Driving on the right-hand side of the road
  Input data specified in US units
  Default Values File No. 11
  Peak flow period (for performance): 15 minutes
  Unit time (for volumes): 60 minutes (Total Flow Period)
  Delay definition: Control delay
                    Geometric delay included
  HCM Delay and Queue Models option selected
  Level of Service based on: Delay (HCM method)
  Queue definition: Back of queue, 95th Percentile

* No. of Main (Timing-Capacity) Iterations = 2
  Comparison of last two iterations:
    Difference in intersection degree of satn = 0.0 %
    Difference in total vehicle capacity = 0.0 %
    Largest difference in eff. green times = 0 secs
    (max. value for stopping = 0 secs)

Sea View II
Int. PR-3, PR-925 & Rampa PR-53; Hora Pico PM, 2009
Intersection ID: 5
Actuated Isolated Signals, Cycle Time = 113

Table S.3 - INTERSECTION PARAMETERS

Critical Movements: 12, 13(1st), 43(1st), 32

L= 110 Y= 0.000 U= 0.000 T= 110.0

Cycle Time:

Minimum	Maximum	Practical	Chosen
54	NA	111	113

Intersection Level of Service	=	D
Worst movement Level of Service	=	F
Average intersection delay (s)	=	48.5
Largest average movement delay (s)	=	86.8
Largest back of queue, 95% (ft)	=	1196
Performance Index	=	300.61
Degree of saturation (highest)	=	1.000
Practical Spare Capacity (lowest)	=	-10 %
Total vehicle capacity, all lanes (veh/h)	=	9611
Total vehicle flow (veh/h)	=	4947
Total person flow (pers/h)	=	5936
Total vehicle delay (veh-h/h)	=	66.62
Total person delay (pers-h/h)	=	79.94
Total effective vehicle stops (veh/h)	=	4347
Total effective person stops (pers/h)	=	5216
Total vehicle travel (veh-mi/h)	=	2157.9
Total cost ($/h)	=	1355.17
Total fuel (ga/h)	=	139.6
Total CO2 (kg/h)	=	1322.25

Sea View II
Int. PR-3, PR-925 & Rampa PR-53; Hora Pico PM, 2009
Intersection ID: 5
Actuated Isolated Signals, Cycle Time = 113

Table S.4 - PHASE INFORMATION

Phase Change Times: 0, 24, 71, 92
Phase Green Times: 20, 43, 17, 17

Current Phase Sequence No.: 1
Input phase sequence: A B C D
Output phase sequence: A B C D

Sea View II
Int. PR-3, PR-925 & Rampa PR-53; Hora Pico PM, 2009
Intersection ID: 5
Actuated Isolated Signals, Cycle Time = 113

Table S.6 - INTERSECTION PERFORMANCE

Total	Deg.	Total	Total	Aver.	Prop.	Eff.	Longest	Perf.	Aver.

Flow (veh/h)	Satn x	Delay (veh-h/h)	Delay (pers-h/h)	Delay (sec)	Queued	Stop Rate	Queue (ft)	Index	Speed (mph)
INTERSECTION (persons):									
5936	1.000		79.94	48.5	0.864	0.88		300.61	29.5

Queue values in this table are 95% back of queue (feet).

Sea View II
Int. PR-3, PR-925 & Rampa PR-53; Hora Pico PM, 2009
Intersection ID: 5
Actuated Isolated Signals, Cycle Time = 113

Table S.7 - LANE PERFORMANCE

Lane No.	Mov No.	Effective Green Times (sec) R1	G1	R2	G2	Dem Flow (veh /h)	Cap (veh /h)	Deg. Satn x	Aver. Delay (sec)	Eff. Stop Rate	Queue 95% Back (vehs)	(ft)	Shrt Lane (ft)
West: PR-3 Oeste													
1 L	12	93	20	0	0	187	187	1.000	59.8r	0.81	11.5*	309<	160
2 LT	11	70	43	0	0	714	754	0.947	58.8	0.97	46.9	1196	
3 T	11	70	43	0	0	714	754	0.947	58.8	1.03	46.9	1180	
4 TR	11, 13	60	43	4	6	703	742	0.947	58.0	1.02	43.6	1106	
South: Ramp PR-53 Sur													
1 L	32	96	17	0	0	159	281	0.566	63.8	0.81	10.8	275	
2 LT	32, 31	4	1	91	17	162	286	0.566	58.6	0.80	10.7	273	
3 R	33	0	113	0	0	82	1644	0.050	9.3	0.65	2.1#		60
East: PR-3 Este													
1 L	22	93	20	0	0	291	327	0.889	86.8	0.93	21.8*	557	400
2 T	21	70	43	0	0	452	752	0.601	32.7	0.74	23.6	595	
3 T	21	70	43	0	0	452	752	0.601	32.7	0.74	23.6	595	
4 T	21	70	43	0	0	452	752	0.601	32.7	0.74	23.6	595	
5 R	23	0	113	0	0	212	1694	0.125	10.3	0.67	4.7#		400
North: PR-925 Norte													
1 LT	42, 41	96	17	0	0	122	288	0.424	55.1	0.76	8.1	207	
2 R	41, 43	4	17	33	59	244	396	0.616	21.0	0.80	8.4*	210	200

< Short lane capacity is reached and there is excess flow into an adjacent lane
Density (passenger cars per km or mile)
* Queue length exceeds short lane length due to specification of a percentile queue in the aaSIDRA Configuration File. For calculation of this statistic, you may specify the lane with full length.
r Delay, stops and queue length for this lane have been cut down to fit in the queuing space. The amount cut may not be accounted for fully in the

adjacent lane performance statistics. You may wish to change the short lane to a full lane to investigate the extent of this effect.

Sea View II
Int. PR-3, PR-925 & Rampa PR-53; Hora Pico PM, 2009
Intersection ID: 5
Actuated Isolated Signals, Cycle Time = 113

Table S.10 - MOVEMENT CAPACITY AND PERFORMANCE SUMMARY

Mov No.	Mov Typ	Dem Flow (veh /h)	Total Cap. (veh /h)	Lane Util (%)	Deg. Satn x	Eff. Grn 1st Grn	Eff. Grn 2nd Grn	Aver. Delay (sec)	Eff. Stop Rate	95% Back of Queue (veh)	Perf. Index
West: PR-3 Oeste											
12	L	187	187<	100	1.000*	20*		59.8	0.81	11.5	11.74
11	LT	1677E	1771	100	0.947	43		57.6	1.03	46.9	119.99
13	R	454E	479	100	0.947	43*	62	61.8	1.02	43.6	31.95
South: Ramp PR-53 Sur											
32	L	296	523	100	0.566	17*		61.9	0.81	10.8	19.50
31	T	25	44	100	0.563	88	17	49.7	0.77	10.7	1.54
33	R (Con)	82	1644	100	0.050	113		9.3	0.65	2.1 #	1.36
East: PR-3 Este											
22	L	291	327	100	0.889	20		86.8	0.93	21.8	23.37
21	T	1357	2257	100	0.601	43		32.7	0.74	23.6	70.68
23	R (Con)	212	1694	100	0.125	113		10.3	0.67	4.7 #	3.45
North: PR-925 Norte											
42	L	51	120	69	0.424	17		60.9	0.79	8.1	3.29
41	T	71	167	69	0.424	17		50.7	0.74	8.1	4.37
43	R (Un2)	244	396<	100	0.616	17*	59	21.0	0.80	8.4	9.39

E "Excess" flow from the short lane of an adjacent movement added to normal flow
< Reduced capacity due to a short lane effect
* Maximum degree of saturation, or critical green periods
# Largest density (passenger cars per km or mile) for any lane

---

Sea View II
Int. PR-3, PR-925 & Rampa PR-53; Hora Pico PM, 2009
Intersection ID: 5
Actuated Isolated Signals, Cycle Time = 113

Table S.14 - SUMMARY OF INPUT AND OUTPUT DATA

Lane No.	Demand Flow (veh/h) L	T	R	Tot	%HV	Adj. Basic Satf.	Eff Grn (secs) 1st	2nd	Deg Sat x	Aver. Delay (sec)	Longest Queue (ft)	Shrt Lane (ft)
West: PR-3 Oeste												

1	L	187			187	9	2000	20		1.000	59.8r	309*	160
2	LT	187	565		714	3	2000	43		0.947	58.8	1196	
3	T		714		714	1	2000	43		0.947	58.8	1180	
4	TR		249	454	703	2	2000	43	6	0.947	58.0	1106	
		336	1528	454	2318	3				1.000	58.6	1196	
South:		Ramp PR-53 Sur											
1	L	159			159	2	2000	17		0.566	63.8	275	
2	LT	137	25		162	3	2000	1	17	0.566	58.6	273	
3	R			82	82	5	2000	113		0.050	9.3		60
		296	25	82	403	3				0.566	50.6	275	250d
East:		PR-3 Este											
1	L	291			291	3	2000	20		0.889	86.8	557*	400
2	T		452		452	1	2000	43		0.601	32.7	595	
3	T		452		452	1	2000	43		0.601	32.7	595	
4	T		452		452	1	2000	43		0.601	32.7	595	
5	R			212	212	0	2000	113		0.125	10.3		400
		291	1357	212	1860	1				0.889	38.6	595	
North:		PR-925 Norte											
1	LT	51	71		122	2	2000	17		0.424	55.1	207	
2	R			244	244	0	2000	17	59	0.616	21.0	210*	200
		51	71	244	366	1				0.616	32.3	210	250d

ALL VEHICLES	Total Flow	% HV	Cycle Time	Max X	Aver. Delay	Max Queue
	4947	2	113	1.000	48.5	1196

Total flow period = 60 minutes. Peak flow period = 15 minutes.

Queue values in this table are 95% back of queue (feet).

Note: Basic Saturation Flows (in through car units) have been adjusted for grade, lane widths, parking manoeuvres and bus stops.

* Queue length exceeds short lane length due to specification of a percentile queue in the aaSIDRA Configuration File. For calculation of this statistic, you may specify the lane with full length.

d Short lane length on departure side.

r Delay, stops and queue length for this lane have been cut down to fit in the queuing space. The amount cut may not be accounted for fully in the adjacent lane performance statistics. You may wish to change the short lane to a full lane to investigate the extent of this effect.

Sea View II
Int. PR-3, PR-925 & Rampa PR-53; Hora Pico PM, 2009
Intersection ID: 5
Actuated Isolated Signals, Cycle Time = 113

Table S.15 - CAPACITY AND LEVEL OF SERVICE

Mov No.	Mov Typ	Green Ratio 1st grn	Time (g/C) 2nd grn	Total Flow (veh /h)	Total Cap. (veh /h)	Deg. of Satn (v/c)	Aver. Delay (sec)	LOS
West: PR-3 Oeste								
12	L	0.177*		187	187<	1.000*	59.8	E
11	LT	0.381		1677E	1771	0.947	57.6	E
13	R	0.381*	0.549	454E	479	0.947	61.8	E
				2318	2438	1.000	58.6	E
South: Ramp PR-53 Sur								
32	L	0.150*		296	523	0.566	61.9	E
31	T	0.779	0.150	25	44	0.563	49.7	D
33	R (Con)	1.000		82	1644	0.050	9.3	A#
				403	2211	0.566	50.5	D
East: PR-3 Este								
22	L	0.177		291	327	0.889	86.8	F
21	T	0.381		1357	2257	0.601	32.7	C
23	R (Con)	1.000		212	1694	0.125	10.3	A#
				1860	4278	0.889	38.6	D
North: PR-925 Norte								
42	L	0.150		51	120	0.424	60.9	E
41	T	0.150		71	167	0.424	50.7	D
43	R (Un2)	0.150*	0.522	244	396<	0.616	21.0	C
				366	684	0.616	32.3	C
ALL VEHICLES:				4947	9611	1.000	48.5	D
INTERSECTION (persons):				5936	9611	1.000	48.5	

Level of Service calculations are based on
average control delay including geometric delay (HCM criteria),
independent of the current delay definition used.
For the criteria, refer to the "Level of Service" topic in the
aaSIDRA Output Guide or the Output section of the on-line help.

- # Level Of Service for continuous movements based on density
- < Reduced capacity due to a short lane effect
- * Maximum v/c ratio, or critical green periods
- E "Excess" flow from the short lane of an adjacent movement added to normal flow

Table S.23 - SENSITIVITY ANALYSIS RESULTS

Performance Measure	Smallest Value	Param Scale
Degree of Satn	1.000	70
Average Delay	48.5	85
Stop Rate	0.84	120
Max. Queue for Any Movement	44.3	55
Perf. Index	292.4	65
Cost total	1355.2	85

Performance Measure	Largest Value	Param Scale
Total Vehicle Cap.	9828	115
Prac. Spare Cap.	-10	70

Sea View II
Int. PR-3, PR-925 & Rampa PR-53; Hora Pico PM, 2009
Intersection ID: 5
Actuated Isolated Signals, Cycle Time = 113

Table D.5 - PROGRESSION FACTORS & ACTUATED SIGNAL PARAMETERS

Mov No.	Control	Coord.	Arrival Type	Delay Prog. Factor	Queue Prog. Factor	Gap Settings es	Gap Settings eh	Disp. Grn. Settings 1st Grn Gmin	1st Grn Gmax	2nd Grn Gmin	2nd Grn Gmax
West: PR-3 Oeste											
12	VA	No	3	1.000	1.000	2.0	2.5	20	17		
11	VA	No	3	1.000	1.000	2.5	3.0	6	43		
13	VA	No	3	1.000	1.000	2.5	3.0	6	43	6	43
South: Ramp PR-53 Sur											
32	VA	No	3	1.000	1.000	2.0	2.5	6	17		
31	VA	No	3	1.000	1.000	2.5	3.0	6	43	6	43
33	VA	No	3	1.000	1.000	2.5	3.1	6	43		
East: PR-3 Este											
22	VA	No	3	1.000	1.000	2.0	2.5	20	17		
21	VA	No	3	1.000	1.000	2.5	3.0	6	43		
23	VA	No	3	1.000	1.000	2.5	3.0	6	43		
North: PR-925 Norte											
42	VA	No	3	1.000	1.000	2.0	2.5	6	17		
41	VA	No	3	1.000	1.000	2.5	3.0	6	17		
43	VA	No	3	1.000	1.000	2.5	3.1	6	17	6	43

Sea View II
Int. PR-3, PR-925 & Rampa PR-53; Hora Pico PM, 2009
Intersection ID: 5

Scaled sensitivity parameter: Maximum Green

Table V.23 - INTERSECTION SUMMARY FOR VARIABLE PARAMETER SCALE

Param Scale (%)	Cycle Time (sec)	Total Veh. Cap.	Intersn Deg. of Satn	Prac. Spare Cap.	Aver. Delay (sec)	Stop Rate	Longest Queue (veh)	Perf. Index	Cost Total $/h
50	81	8957	1.102	-18	61.0	1.03	45.5	305.5	1544.2
55	86	9107	1.058	-15	55.3	0.98	44.3	295.5	1462.6
60	90	9183	1.042	-14	54.0	0.97	44.8	295.9	1443.3
65	95	9310	1.010	-11	51.0	0.94	44.6	292.4	1398.0
70	99	9367	1.000	-10	51.0	0.93	45.5	295.8	1396.8
75	104	9473	1.000	-10	49.0	0.90	45.5	295.1	1366.8
80	108	9519	1.000	-10	49.3	0.89	46.4	299.3	1369.3
85	113	9611	1.000	-10	48.5	0.88	46.9	300.6	1355.2
90	117	9648	1.000	-10	49.3	0.87	47.9	305.9	1364.5
95	122	9730	1.000	-10	49.3	0.86	48.5	309.7	1363.1
100	126	9758	1.000	-10	50.5	0.86	49.6	316.0	1378.0
105	132	9798	1.000	-10	51.3	0.85	51.2	323.0	1387.3
110	137	9793	1.000	-10	52.7	0.85	53.0	331.2	1405.7
115	143	9828	1.000	-10	53.1	0.84	54.6	337.3	1410.9
120	148	9824	1.000	-10	54.4	0.84	56.4	345.1	1427.2

--- End of aaSIDRA Output ---

Akcelik & Associates Pty Ltd - aaSIDRA 2.0.0.205

Servicios Técnicos Integrados
Francisco J. Reyes Registered User No. 50310
Licence Type: Professional, Single Computer

Time and Date of Analysis 2:47 AM, May 4,2009

Filename: F:\My Documents\Francisco\Consultores\April\Humacao\Sea View II\Sidra\CC-3-09AM.OUT

Sea View II
Intrseccion PR-3 & Ciudad Cristiana; Hora Pico AM, 2009
Intersection ID: 2

aaTraffic SIDRA US Highway Capacity Manual (2000) Version

RUN INFORMATION
---

* Basic Parameters:
  Intersection Type: Unsignalised - Two-Way Stop Control
  Driving on the right-hand side of the road
  Input data specified in US units
  Default Values File No. 11
  Peak flow period (for performance): 15 minutes
  Unit time (for volumes): 60 minutes (Total Flow Period)
  Delay definition: Control delay
  Geometric delay included
  HCM Delay and Queue Models option selected
  Level of Service based on: Delay (HCM method)
  Queue definition: Back of queue, 95th Percentile

Sea View II
Intrseccion PR-3 & Ciudad Cristiana; Hora Pico AM, 2009
Intersection ID: 2
Stop Sign Controlled Intersection

Table S.3 - INTERSECTION PARAMETERS

Intersection Level of Service	=	C
Worst movement Level of Service	=	F
Average intersection delay (s)	=	22.5
Largest average movement delay (s)	=	162.8
Largest back of queue, 95% (ft)	=	374
Performance Index	=	46.12
Degree of saturation (highest)	=	1.000
Practical Spare Capacity (lowest)	=	-20
Total vehicle capacity, all lanes (veh/h)	=	5650
Total vehicle flow (veh/h)	=	1870
Total person flow (pers/h)	=	2244
Total vehicle delay (veh-h/h)	=	11.70
Total person delay (pers-h/h)	=	14.04

Total effective vehicle stops (veh/h)	=	363
Total effective person stops (pers/h)	=	436
Total vehicle travel (veh-mi/h)	=	779.5
Total cost ($/h)	=	369.94
Total fuel (ga/h)	=	38.1
Total CO2 (kg/h)	=	361.28

Sea View II
Intrseccion PR-3 & Ciudad Cristiana; Hora Pico AM, 2009
Intersection ID: 2
Stop Sign Controlled Intersection

Table S.6 - INTERSECTION PERFORMANCE

Total Flow (veh/h)	Deg. Satn x	Total Delay (veh-h/h)	Total Delay (pers-h/h)	Aver. Delay (sec)	Prop. Queued	Eff. Stop Rate	Longest Queue (ft)	Perf. Index	Aver. Speed (mph)
INTERSECTION (persons):									
2244	1.000		14.04	22.5	0.583	0.19		46.12	39.4

Queue values in this table are 95% back of queue (feet).

Sea View II
Intrseccion PR-3 & Ciudad Cristiana; Hora Pico AM, 2009
Intersection ID: 2
Stop Sign Controlled Intersection

Table S.7 - LANE PERFORMANCE

Lane No.	Mov No.	Dem Flow (veh /h)	Cap (veh /h)	Deg. Satn x	Aver. Delay (sec)	Eff. Stop Rate	Queue 95% Back (vehs)	Queue 95% Back (ft)	Short Lane (ft)
West: PR-3 Oeste									
1 T	12	701	1921	0.365	0.0	0.00	0.0	0	
2 R	13	53	1656	0.032	9.2	0.65	0.0	0	
South: Ciudad Cristiana Sur									
1 L	32	111	111	1.000	158.0	1.29	15.0	374	
2 LR	32, 33	106	106	1.000	162.8	1.41	11.7	292	
East: PR-3 Este									
1 LT	22	899	1856	0.484	7.6	0.04	10.9	278	

Sea View II
Intrseccion PR-3 & Ciudad Cristiana; Hora Pico AM, 2009
Intersection ID: 2
Stop Sign Controlled Intersection

Table S.10 - MOVEMENT CAPACITY AND PERFORMANCE SUMMARY

Mov No.	Mov Typ	Dem Flow (veh /h)	Total Cap. (veh /h)	Lane Util (%)	Deg. Satn x	Aver. Delay (sec)	Eff. Stop Rate	95% Back of Queue (veh)	Perf. Index
West: PR-3 Oeste									
12	T	701	1921	100	0.365	0.0	0.00	0.0	7.31
13	R	53	1656	100	0.032	9.2	0.65	0.0	0.88
South: Ciudad Cristiana Sur									
32	L	175	175	100	1.000*	159.8	1.32	15.0	18.50
33	R	42	42	100	1.000*	162.8	1.47	11.7	4.26
East: PR-3 Este									
22	LT	899	1856	100	0.484	7.6	0.04	10.9	15.17

* Maximum degree of saturation

Sea View II
Intrseccion PR-3 & Ciudad Cristiana; Hora Pico AM, 2009
Intersection ID: 2
Stop Sign Controlled Intersection

Table S.14 - SUMMARY OF INPUT AND OUTPUT DATA

Lane No.	Demand Flow (veh/h) L	T	R	Tot	%HV	Adj. Basic Satf.	Eff Grn (secs) 1st	2nd	Deg Sat x	Aver. Delay (sec)	Longest Queue (ft)	Shrt Lane (ft)
West: PR-3 Oeste												
1 T		701		701	4				0.365	0.0	0	
2 R			53	53	4				0.032	9.2	0	
	0	701	53	754	4				0.365	0.6		
South: Ciudad Cristiana Sur												
1 L	111			111	0				1.000	158.0	374	
2 LR	64		42	106	0				1.000	162.8	292	
	175	0	42	217	0				1.000	160.4	374	
East: PR-3 Este												
1 LT	31	868		899	3				0.484	7.6	278	
	31	868	0	899	3				0.484	7.6	278	

ALL VEHICLES	Total Flow	% HV	Max X	Aver. Delay	Max Queue
	1870	3	1.000	22.5	374

Total flow period = 60 minutes. Peak flow period = 15 minutes.

Queue values in this table are 95% back of queue (feet).

Note: Basic Saturation Flows are not adjusted at roundabouts or sign-controlled intersections and apply only to continuous lanes.

Sea View II
Intrseccion PR-3 & Ciudad Cristiana; Hora Pico AM, 2009
Intersection ID: 2
Stop Sign Controlled Intersection

Table S.15 - CAPACITY AND LEVEL OF SERVICE

Mov No.	Mov Typ	Total Flow (veh /h)	Total Cap. (veh /h)	Deg. of Satn (v/c)	Aver. Delay (sec)	LOS
West: PR-3 Oeste						
12	T	701	1921	0.365	0.0	A
13	R	53	1656	0.032	9.2	A
		754	3577	0.365	0.6	A
South: Ciudad Cristiana Sur						
32	L	175	175	1.000*	159.8	F
33	R	42	42	1.000*	162.8	F
		217	217	1.000	160.4	F
East: PR-3 Este						
22	LT	899	1856	0.484	7.6	A
		899	1856	0.484	7.6	A
ALL VEHICLES:		1870	5650	1.000	22.5	C

Level of Service calculations are based on average control delay including geometric delay (HCM criteria), independent of the current delay definition used.
For the criteria, refer to the "Level of Service" topic in the aaSIDRA Output Guide or the Output section of the on-line help.

* Maximum v/c ratio, or critical green periods

--- End of aaSIDRA Output ---

Akcelik & Associates Pty Ltd - aaSIDRA 2.0.0.205

Servicios Técnicos Integrados
Francisco J. Reyes Registered User No. 50310
Licence Type: Professional, Single Computer

Time and Date of Analysis 3:07 AM, May 4,2009

Filename: F:\My Documents\Francisco\Consultores\April\Humacao\Sea View II\Sidra\CC-3-09PM.OUT

Sea View II
Intrseccion PR-3 & Ciudad Cristiana; Hora Pico PM, 2009
Intersection ID: 2

aaTraffic SIDRA US Highway Capacity Manual (2000) Version

RUN INFORMATION

* Basic Parameters:
  Intersection Type: Unsignalised - Two-Way Stop Control
  Driving on the right-hand side of the road
  Input data specified in US units
  Default Values File No. 11
  Peak flow period (for performance): 15 minutes
  Unit time (for volumes): 60 minutes (Total Flow Period)
  Delay definition: Control delay
  Geometric delay included
  HCM Delay and Queue Models option selected
  Level of Service based on: Delay (HCM method)
  Queue definition: Back of queue, 95th Percentile

Sea View II
Intrseccion PR-3 & Ciudad Cristiana; Hora Pico PM, 2009
Intersection ID: 2
Stop Sign Controlled Intersection

Table S.3 - INTERSECTION PARAMETERS

Intersection Level of Service	=	A
Worst movement Level of Service	=	F
Average intersection delay (s)	=	9.9
Largest average movement delay (s)	=	96.3
Largest back of queue, 95% (ft)	=	231
Performance Index	=	30.46
Degree of saturation (highest)	=	0.581
Practical Spare Capacity (lowest)	=	38
Total vehicle capacity, all lanes (veh/h)	=	5534
Total vehicle flow (veh/h)	=	1778
Total person flow (pers/h)	=	2134
Total vehicle delay (veh-h/h)	=	4.87
Total person delay (pers-h/h)	=	5.85

Total effective vehicle stops (veh/h)	=	264
Total effective person stops (pers/h)	=	317
Total vehicle travel (veh-mi/h)	=	741.3
Total cost ($/h)	=	287.63
Total fuel (ga/h)	=	32.8
Total CO2 (kg/h)	=	310.90

Sea View II
Intrseccion PR-3 & Ciudad Cristiana; Hora Pico PM, 2009
Intersection ID: 2
Stop Sign Controlled Intersection

Table S.6 - INTERSECTION PERFORMANCE

Total Flow (veh/h)	Deg. Satn x	Total Delay (veh-h/h)	Total Delay (pers-h/h)	Aver. Delay (sec)	Prop. Queued	Eff. Stop Rate	Longest Queue (ft)	Perf. Index	Aver. Speed (mph)
INTERSECTION (persons):									
2134	0.581		5.85	9.9	0.469	0.15		30.46	50.6

Queue values in this table are 95% back of queue (feet).

Sea View II
Intrseccion PR-3 & Ciudad Cristiana; Hora Pico PM, 2009
Intersection ID: 2
Stop Sign Controlled Intersection

Table S.7 - LANE PERFORMANCE

Lane No.	Mov No.	Dem Flow (veh /h)	Cap (veh /h)	Deg. Satn x	Aver. Delay (sec)	Eff. Stop Rate	Queue 95% Back (vehs)	Queue 95% Back (ft)	Short Lane (ft)
West: PR-3 Oeste									
1 T	12	785	1943	0.404	0.0	0.00	0.0	0	
2 R	13	158	1685	0.094	9.1	0.65	0.0	0	
South: Ciudad Cristiana Sur									
1 L	32	42	72	0.579	108.2	1.08	3.8	96	
2 LR	32, 33	57	99	0.579	82.8	1.11	4.1	102	
East: PR-3 Este									
1 LT	22	736	1735	0.424	9.3	0.07	9.0	231	

Sea View II
Intrseccion PR-3 & Ciudad Cristiana; Hora Pico PM, 2009
Intersection ID: 2
Stop Sign Controlled Intersection

Table S.10 - MOVEMENT CAPACITY AND PERFORMANCE SUMMARY

Mov No.	Mov Typ	Dem Flow (veh /h)	Total Cap. (veh /h)	Lane Util (%)	Deg. Satn x	Aver. Delay (sec)	Eff. Stop Rate	95% Back of Queue (veh)	Perf. Index
West: PR-3 Oeste									
12	T	785	1943	100	0.404	0.0	0.00	0.0	8.19
13	R	158	1685	100	0.094	9.1	0.65	0.0	2.61
South: Ciudad Cristiana Sur									
32	L	79	136	100	0.581*	96.3	1.09	4.1	5.50
33	R	20	35	100	0.571	82.8	1.12	4.1	1.25
East: PR-3 Este									
22	LT	736	1735	100	0.424	9.3	0.07	9.0	12.91

* Maximum degree of saturation

Sea View II
Intrseccion PR-3 & Ciudad Cristiana; Hora Pico PM, 2009
Intersection ID: 2
Stop Sign Controlled Intersection

Table S.14 - SUMMARY OF INPUT AND OUTPUT DATA

Lane No.	Demand Flow (veh/h) L	T	R	Tot	%HV	Adj. Basic Satf.	Eff Grn (secs) 1st	2nd	Deg Sat x	Aver. Delay (sec)	Longest Queue (ft)	Shrt Lane (ft)
West: PR-3 Oeste												
1 T		785		785	3				0.404	0.0	0	
2 R			158	158	1				0.094	9.1	0	
	0	785	158	943	3				0.404	1.5		
South: Ciudad Cristiana Sur												
1 L	42			42	0				0.579	108.2	96	
2 LR	37		20	57	0				0.579	82.8	102	
	79	0	20	99	0				0.579	93.5	102	
East: PR-3 Este												
1 LT	46	690		736	3				0.424	9.3	231	
	46	690	0	736	3				0.424	9.3	231	

ALL VEHICLES	Total Flow	% HV	Max X	Aver. Delay	Max Queue
	1778	3	0.581	9.9	231

Total flow period = 60 minutes. Peak flow period = 15 minutes.

Queue values in this table are 95% back of queue (feet).

Note: Basic Saturation Flows are not adjusted at roundabouts or sign-controlled intersections and apply only to continuous lanes.

Sea View II
Intrseccion PR-3 & Ciudad Cristiana; Hora Pico PM, 2009
Intersection ID: 2
Stop Sign Controlled Intersection

Table S.15 - CAPACITY AND LEVEL OF SERVICE

Mov No.	Mov Typ	Total Flow (veh /h)	Total Cap. (veh /h)	Deg. of Satn (v/c)	Aver. Delay (sec)	LOS
West: PR-3 Oeste						
12	T	785	1943	0.404	0.0	A
13	R	158	1685	0.094	9.1	A
		943	3628	0.404	1.5	A
South: Ciudad Cristiana Sur						
32	L	79	136	0.581*	96.3	F
33	R	20	35	0.571	82.8	F
		99	171	0.581	93.5	F
East: PR-3 Este						
22	LT	736	1735	0.424	9.3	A
		736	1735	0.424	9.3	A
ALL VEHICLES:		1778	5534	0.581	9.9	A

Level of Service calculations are based on average control delay including geometric delay (HCM criteria), independent of the current delay definition used.
For the criteria, refer to the "Level of Service" topic in the aaSIDRA Output Guide or the Output section of the on-line help.
* Maximum v/c ratio, or critical green periods

--- End of aaSIDRA Output ---

Akcelik & Associates Pty Ltd - aaSIDRA 2.0.0.205

Servicios Técnicos Integrados
Francisco J. Reyes Registered User No. 50310
Licence Type: Professional, Single Computer

Time and Date of Analysis 2:51 AM, May 4,2009

Filename: F:\My Documents\Francisco\Consultores\April\Humacao\Sea View II\Sidra\CCom-3-09AM.OUT

Sea View II
Int. PR-3 & Acceso a Centro Comercial, Hora Pico AM, 2009
Intersection ID: 3

aaTraffic SIDRA US Highway Capacity Manual (2000) Version

RUN INFORMATION

Parameter sensitivity run: "Optimum" Maximum Green = 50.0 s

* Basic Parameters:
  Intersection Type: Signalised - Actuated Isolated
  For fully-actuated signal timings, the following specifications will be ignored:
    Any maximum cycle time specification
    Any user-given cycle time (unless phase times also given)
    User-given cycle and phase times (if variable flow scale run)
    Any variable cycle time specification
    Any green split priority specification
  Driving on the right-hand side of the road
  Input data specified in US units
  Default Values File No. 11
  Peak flow period (for performance): 15 minutes
  Unit time (for volumes): 60 minutes (Total Flow Period)
  Delay definition: Control delay
                Geometric delay included
  HCM Delay and Queue Models option selected
  Level of Service based on: Delay (HCM method)
  Queue definition: Back of queue, 95th Percentile

* No. of Main (Timing-Capacity) Iterations = 3
  Comparison of last two iterations:
    Difference in intersection degree of satn = 0.0 %
    Difference in total vehicle capacity = 0.0 %
    Largest difference in eff. green times = 0 secs
    (max. value for stopping = 0 secs)

Sea View II
Int. PR-3 & Acceso a Centro Comercial, Hora Pico AM, 2009
Intersection ID: 3
Actuated Isolated Signals, Cycle Time = 47

Table S.3 - INTERSECTION PARAMETERS

Critical Movements: 12, 21, 43(2nd)

L= 18 Y= 0.359 U= 0.612 T= 46.7

Cycle Time:

Minimum	Maximum	Practical	Chosen
30	NA	47	47

Intersection Level of Service	=	B
Worst movement Level of Service	=	C
Average intersection delay (s)	=	11.8
Largest average movement delay (s)	=	32.0
Largest back of queue, 95% (ft)	=	349
Performance Index	=	71.32
Degree of saturation (highest)	=	0.664
Practical Spare Capacity (lowest)	=	35 %
Total vehicle capacity, all lanes (veh/h)	=	6556
Total vehicle flow (veh/h)	=	2637
Total person flow (pers/h)	=	3164
Total vehicle delay (veh-h/h)	=	8.61
Total person delay (pers-h/h)	=	10.34
Total effective vehicle stops (veh/h)	=	1582
Total effective person stops (pers/h)	=	1898
Total vehicle travel (veh-mi/h)	=	1099.1
Total cost ($/h)	=	448.37
Total fuel (ga/h)	=	54.6
Total CO2 (kg/h)	=	518.01

Sea View II
Int. PR-3 & Acceso a Centro Comercial, Hora Pico AM, 2009
Intersection ID: 3
Actuated Isolated Signals, Cycle Time = 47

Table S.4 - PHASE INFORMATION

Phase Change Times: 0, 13, 37
Phase Green Times: 9, 20, 6

Current Phase Sequence No.: 1
Input phase sequence: A B D
Output phase sequence: A B D

Sea View II
Int. PR-3 & Acceso a Centro Comercial, Hora Pico AM, 2009
Intersection ID: 3
Actuated Isolated Signals, Cycle Time = 47

Table S.6 - INTERSECTION PERFORMANCE

Total	Deg.	Total	Total	Aver.	Prop.	Eff.	Longest	Perf.	Aver.

Flow (veh/h)	Satn x	Delay (veh-h/h)	Delay (pers-h/h)	Delay (sec)	Queued	Stop Rate	Queue (ft)	Index	Speed (mph)
INTERSECTION (persons):									
3164	0.664		10.34	11.8	0.657	0.60		71.32	48.7

Queue values in this table are 95% back of queue (feet).

Sea View II
Int. PR-3 & Acceso a Centro Comercial, Hora Pico AM, 2009
Intersection ID: 3
Actuated Isolated Signals, Cycle Time = 47

Table S.7 - LANE PERFORMANCE

Lane No.	Mov No.	Effective Green Times (sec) R1	G1	R2	G2	Dem Flow (veh /h)	Cap (veh /h)	Deg. Satn x	Aver. Delay (sec)	Eff. Stop Rate	Queue 95% Back (vehs)	(ft)	Shrt Lane (ft)
West: PR-3 Oeste													
1 L	12	38	9	0	0	141	354	0.397	29.7	0.78	4.1	104	160
2 L	12	38	9	0	0	141	354	0.397	29.7	0.78	4.1	104	160
3 T	11	14	33	0	0	546	1343	0.407	3.5	0.39	7.2	186	
4 T	11	14	33	0	0	546	1343	0.407	3.5	0.39	7.2	186	
East: PR-3 Este													
1 T	21	27	20	0	0	546	823	0.664	14.5	0.73	13.6	349	
2 TR	21, 23	19	20	7	1	548	825	0.664	14.6	0.75	13.1	338	
North: Centro Comercial Norte													
1 L	42	41	6	0	0	37	212	0.175	32.0	0.73	1.1	32	
2 R	43	14	23	4	6	67	652	0.102	12.9	0.75	0.7	20	
3 R	43	14	23	4	6	67	652	0.102	12.9	0.75	0.7	20	

Sea View II
Int. PR-3 & Acceso a Centro Comercial, Hora Pico AM, 2009
Intersection ID: 3
Actuated Isolated Signals, Cycle Time = 47

Table S.10 - MOVEMENT CAPACITY AND PERFORMANCE SUMMARY

Mov No.	Mov Typ	Dem Flow (veh /h)	Total Cap. (veh /h)	Lane Util (%)	Deg. Satn x	Eff. Grn 1st Grn	Eff. Grn 2nd Grn	Aver. Delay (sec)	Eff. Stop Rate	95% Back of Queue (veh)	Perf. Index
West: PR-3 Oeste											
12	L	281	707	100	0.397	9*		29.7	0.78	4.1	10.45
11	T	1092	2686	100	0.407	33		3.5	0.39	7.2	22.01

East: PR-3 Este											
21 T		1053	1586	100	0.664*	20*		14.2	0.74	13.6	32.93
23 R	(Un2)	41	62	100	0.664*	20	16	24.0	0.86	13.1	1.41
North: Centro Comercial Norte											
42 L		37	212	100	0.175	6		32.0	0.73	1.1	1.40
43 R	(Un1)	133	1304	100	0.102	23	6*	12.9	0.75	0.7	3.12

* Maximum degree of saturation, or critical green periods

Sea View II
Int. PR-3 & Acceso a Centro Comercial, Hora Pico AM, 2009
Intersection ID: 3
Actuated Isolated Signals, Cycle Time = 47

Table S.14 - SUMMARY OF INPUT AND OUTPUT DATA

Lane No.	Demand Flow (veh/h) L	T	R	Tot	%HV	Adj. Basic Satf.	Eff Grn (secs) 1st	2nd	Deg Sat x	Aver. Delay (sec)	Longest Queue (ft)	Shrt Lane (ft)
West: PR-3 Oeste												
1 L	141			141	3	2000	9		0.397	29.7	104	160
2 L	141			141	3	2000	9		0.397	29.7	104	160
3 T		546		546	5	2000	33		0.407	3.5	186	
4 T		546		546	5	2000	33		0.407	3.5	186	
	281	1092	0	1373	4				0.407	8.9	186	
East: PR-3 Este												
1 T		546		546	3	2000	20		0.664	14.5	349	
2 TR		507	41	548	4	2000	20	1	0.664	14.6	338	
	0	1053	41	1094	4				0.664	14.6	349	
North: Centro Comercial Norte												
1 L	37			37	16	2000	6		0.175	32.0	32	
2 R			67	67	10	2000	23	6	0.102	12.9	20	
3 R			67	67	10	2000	23	6	0.102	12.9	20	
	37	0	133	170	11				0.175	17.1	32	

ALL VEHICLES	Total Flow	% HV	Cycle Time	Max X	Aver. Delay	Max Queue
	2637	5	47	0.664	11.8	349

Total flow period = 60 minutes. Peak flow period = 15 minutes.

Queue values in this table are 95% back of queue (feet).

Note: Basic Saturation Flows (in through car units) have been adjusted for grade, lane widths, parking manoeuvres and bus stops.

Int. PR-3 & Acceso a Centro Comercial, Hora Pico AM, 2009
Intersection ID: 3
Actuated Isolated Signals, Cycle Time = 47

Table S.15 - CAPACITY AND LEVEL OF SERVICE

Mov No.	Mov Typ	Green Ratio 1st grn	Time (g/C) 2nd grn	Total Flow (veh /h)	Total Cap. (veh /h)	Deg. of Satn (v/c)	Aver. Delay (sec)	LOS
West: PR-3 Oeste								
12	L	0.191*		281	707	0.397	29.7	C
11	T	0.702		1092	2686	0.407	3.5	A
				1373	3393	0.407	8.9	A
East: PR-3 Este								
21	T	0.426*		1053	1586	0.664*	14.2	B
23	R (Un2)	0.426	0.340	41	62	0.664*	24.0	C
				1094	1648	0.664	14.6	B
North: Centro Comercial Norte								
42	L	0.128		37	212	0.175	32.0	C
43	R (Un1)	0.489	0.128*	133	1304	0.102	12.9	B
				170	1515	0.175	17.1	B
ALL VEHICLES:				2637	6556	0.664	11.8	B
INTERSECTION (persons):				3164	6556	0.664	11.8	

Level of Service calculations are based on
average control delay including geometric delay (HCM criteria),
independent of the current delay definition used.
For the criteria, refer to the "Level of Service" topic in the
aaSIDRA Output Guide or the Output section of the on-line help.
* Maximum v/c ratio, or critical green periods

Sea View II
Int. PR-3 & Acceso a Centro Comercial, Hora Pico AM, 2009
Intersection ID: 3

Table S.23 - SENSITIVITY ANALYSIS RESULTS

Performance Measure	Smallest Value	Param Scale
Degree of Satn	0.664	50
Average Delay	11.8	50
Stop Rate	0.60	50

Max. Queue for Any Movement	13.6	50
Perf. Index	71.3	50
Cost total	448.4	50

Performance Measure	Largest Value	Param Scale
Total Vehicle Cap.	6556	50
Prac. Spare Cap.	35	50

Sea View II
Int. PR-3 & Acceso a Centro Comercial, Hora Pico AM, 2009
Intersection ID: 3
Actuated Isolated Signals, Cycle Time = 47

Table D.5 - PROGRESSION FACTORS & ACTUATED SIGNAL PARAMETERS

Mov No.	Control	Coord.	Arrival Type	Delay Prog. Factor	Queue Prog. Factor	Gap Settings es	Gap Settings eh	Disp. Grn. Settings 1st Grn Gmin	1st Grn Gmax	2nd Grn Gmin	2nd Grn Gmax
West: PR-3 Oeste											
12	VA	No	3	1.000	1.000	2.0	2.6	6	10		
11	VA	No	3	1.000	1.000	2.5	3.1	6	25		
East: PR-3 Este											
21	VA	No	3	1.000	1.000	2.5	3.1	6	25		
23	VA	No	3	1.000	1.000	2.5	3.1	6	25	6	25
North: Centro Comercial Norte											
42	VA	No	3	1.000	1.000	2.0	2.6	6	10		
43	VA	No	3	1.000	1.000	2.5	3.1	6	25	6	25

Sea View II
Int. PR-3 & Acceso a Centro Comercial, Hora Pico AM, 2009
Intersection ID: 3

Scaled sensitivity parameter: Maximum Green

Table V.23 - INTERSECTION SUMMARY FOR VARIABLE PARAMETER SCALE

Param Scale (%)	Cycle Time (sec)	Total Veh. Cap.	Intersn Deg. of Satn	Prac. Spare Cap.	Aver. Delay (sec)	Stop Rate	Longest Queue (veh)	Perf. Index	Cost Total $/h
50	47	6556	0.664	35	11.8	0.60	13.6	71.3	448.4
55	47	6554	0.664	35	11.8	0.60	13.6	71.3	448.4
60	47	6554	0.664	35	11.8	0.60	13.6	71.4	448.5
65	47	6553	0.664	35	11.8	0.60	13.6	71.4	448.5
70	47	6552	0.664	35	11.8	0.60	13.6	71.4	448.5
75	47	6552	0.664	35	11.8	0.60	13.6	71.4	448.5

80	47	6551	0.664	35	11.8	0.60	13.6	71.4	448.5
85	47	6551	0.664	35	11.8	0.60	13.6	71.4	448.5
90	47	6551	0.664	35	11.8	0.60	13.6	71.4	448.5
95	47	6550	0.664	35	11.8	0.60	13.6	71.4	448.5
100	47	6550	0.664	35	11.8	0.60	13.6	71.4	448.5
105	47	6550	0.664	35	11.8	0.60	13.6	71.4	448.5
110	47	6550	0.664	35	11.8	0.60	13.6	71.4	448.5
115	47	6550	0.664	35	11.8	0.60	13.6	71.4	448.5
120	47	6550	0.664	35	11.8	0.60	13.6	71.4	448.5

--- End of aaSIDRA Output ---

Akcelik & Associates Pty Ltd - aaSIDRA 2.0.0.205

Servicios Técnicos Integrados
Francisco J. Reyes Registered User No. 50310
Licence Type: Professional, Single Computer

Time and Date of Analysis 3:01 AM, May 4,2009

Filename: F:\My Documents\Francisco\Consultores\April\Humacao\Sea View II\Sidra\CCom-3-09PM.OUT

Sea View II
Int. PR-3 & Acceso a Centro Comercial, Hora Pico PM, 2009
Intersection ID: 3

aaTraffic SIDRA US Highway Capacity Manual (2000) Version

RUN INFORMATION

Parameter sensitivity run: "Optimum" Maximum Green = 60.0 %

* Basic Parameters:
  Intersection Type: Signalised - Actuated Isolated
  For fully-actuated signal timings, the following specifications will be ignored:
    Any maximum cycle time specification
    Any user-given cycle time (unless phase times also given)
    User-given cycle and phase times (if variable flow scale run)
    Any variable cycle time specification
    Any green split priority specification
  Driving on the right-hand side of the road
  Input data specified in US units
  Default Values File No. 11
  Peak flow period (for performance): 15 minutes
  Unit time (for volumes): 60 minutes (Total Flow Period)
  Delay definition: Control delay
                    Geometric delay included
  HCM Delay and Queue Models option selected
  Level of Service based on: Delay (HCM method)
  Queue definition: Back of queue, 95th Percentile

* No. of Main (Timing-Capacity) Iterations = 3
  Comparison of last two iterations:
    Difference in intersection degree of satn = 0.0 %
    Difference in total vehicle capacity = 0.0 %
    Largest difference in eff. green times = 0 secs
    (max. value for stopping = 0 secs)

Sea View II
Int. PR-3 & Acceso a Centro Comercial, Hora Pico PM, 2009
Intersection ID: 3
Actuated Isolated Signals, Cycle Time = 56

Table S.3 - INTERSECTION PARAMETERS

Critical Movements: 12, 23(1st), 43(2nd)

L= 24 Y= 0.425 U= 0.571 T= 56.0

Cycle Time:

Minimum	Maximum	Practical	Chosen
30	NA	56	56

Intersection Level of Service	=	B
Worst movement Level of Service	=	D
Average intersection delay (s)	=	17.6
Largest average movement delay (s)	=	39.4
Largest back of queue, 95% (ft)	=	435
Performance Index	=	103.20
Degree of saturation (highest)	=	0.719
Practical Spare Capacity (lowest)	=	25 %
Total vehicle capacity, all lanes (veh/h)	=	6766
Total vehicle flow (veh/h)	=	3265
Total person flow (pers/h)	=	3918
Total vehicle delay (veh-h/h)	=	15.98
Total person delay (pers-h/h)	=	19.18
Total effective vehicle stops (veh/h)	=	2160
Total effective person stops (pers/h)	=	2592
Total vehicle travel (veh-mi/h)	=	1359.0
Total cost ($/h)	=	625.90
Total fuel (ga/h)	=	70.9
Total CO2 (kg/h)	=	671.60

Sea View II
Int. PR-3 & Acceso a Centro Comercial, Hora Pico PM, 2009
Intersection ID: 3
Actuated Isolated Signals, Cycle Time = 56

Table S.4 - PHASE INFORMATION

Phase Change Times: 0, 16, 44
Phase Green Times: 12, 24, 8

Current Phase Sequence No.: 1
Input phase sequence: A B D
Output phase sequence: A B D

Sea View II
Int. PR-3 & Acceso a Centro Comercial, Hora Pico PM, 2009
Intersection ID: 3
Actuated Isolated Signals, Cycle Time = 56

Table S.6 - INTERSECTION PERFORMANCE

Total	Deg.	Total	Total	Aver.	Prop.	Eff.	Longest	Perf.	Aver.

Flow (veh/h)	Satn x	Delay (veh-h/h)	Delay (pers-h/h)	Delay (sec)	Queued	Stop Rate	Queue (ft)	Index	Speed (mph)
INTERSECTION (persons):									
3918	0.719		19.18	17.6	0.690	0.66		103.20	42.1

Queue values in this table are 95% back of queue (feet).

Sea View II
Int. PR-3 & Acceso a Centro Comercial, Hora Pico PM, 2009
Intersection ID: 3
Actuated Isolated Signals, Cycle Time = 56

Table S.7 - LANE PERFORMANCE

Lane No.	Mov No.	Effective Green Times (sec) R1	G1	R2	G2	Dem Flow (veh /h)	Cap (veh /h)	Deg. Satn x	Aver. Delay (sec)	Eff. Stop Rate	Queue 95% Back (vehs)	(ft)	Shrt Lane (ft)
West: PR-3 Oeste													
1 L	12	44	12	0	0	286	397	0.719	39.4	0.85	10.5*	268	160
2 L	12	44	12	0	0	286	397	0.719	39.4	0.85	10.5*	268	160
3 T	11	16	40	0	0	490	1370	0.358	3.6	0.35	7.0	180	
4 T	11	16	40	0	0	490	1370	0.358	3.6	0.35	7.0	180	
East: PR-3 Este													
1 T	21	32	24	0	0	580	830	0.698	17.6	0.75	17.0	435	
2 TR	21, 23	12	1	19	24	554	794	0.698	19.4	0.78	16.1	417	
North: Centro Comercial Norte													
1 L	42	48	8	0	0	101	239	0.422	36.9	0.77	3.7	104	
2 R	43	17	27	4	8	240	684	0.350	14.3	0.79	4.0	101	
3 R	43	17	27	4	8	240	684	0.350	14.3	0.79	4.0	101	

* Queue length exceeds short lane length due to specification of a percentile queue in the aaSIDRA Configuration File. For calculation of this statistic, you may specify the lane with full length.

Sea View II
Int. PR-3 & Acceso a Centro Comercial, Hora Pico PM, 2009
Intersection ID: 3
Actuated Isolated Signals, Cycle Time = 56

Table S.10 - MOVEMENT CAPACITY AND PERFORMANCE SUMMARY

Mov No.	Mov Typ	Dem Flow (veh /h)	Total Cap. (veh /h)	Lane Util (%)	Deg. Satn x	Eff. Grn 1st Grn	Eff. Grn 2nd Grn	Aver. Delay (sec)	Eff. Stop Rate	95% Back of Queue (veh)	Perf. Index
West: PR-3 Oeste											

12	L		571	794	100	0.719*	12*		39.4	0.85	10.5	25.68
11	T		980	2740	100	0.358	40		3.6	0.35	7.0	20.12
East: PR-3 Este												
21	T		1077	1542	100	0.698	24		17.9	0.76	17.0	38.00
23	R	(Un2)	57	82	100	0.694	24*	16	28.7	0.88	16.1	2.21
North: Centro Comercial Norte												
42	L		101	239	100	0.422	8		36.9	0.77	3.7	4.33
43	R	(Un1)	479	1369	100	0.350	27	8*	14.3	0.79	4.0	12.86

* Maximum degree of saturation, or critical green periods

Sea View II
Int. PR-3 & Acceso a Centro Comercial, Hora Pico PM, 2009
Intersection ID: 3
Actuated Isolated Signals, Cycle Time = 56

Table S.14 - SUMMARY OF INPUT AND OUTPUT DATA

Lane No.	Demand Flow (veh/h) L	T	R	Tot	%HV	Adj. Basic Satf.	Eff Grn (secs) 1st	2nd	Deg Sat x	Aver. Delay (sec)	Longest Queue (ft)	Shrt Lane (ft)
West: PR-3 Oeste												
1 L	286			286	3	2000	12		0.719	39.4	268*	160
2 L	286			286	3	2000	12		0.719	39.4	268*	160
3 T		490		490	4	2000	40		0.358	3.6	180	
4 T		490		490	4	2000	40		0.358	3.6	180	
	571	980	0	1551	4				0.719	16.8	268	
East: PR-3 Este												
1 T		580		580	3	2000	24		0.698	17.6	435	
2 TR		497	57	554	5	2000	1	24	0.698	19.4	417	
	0	1077	57	1134	4				0.698	18.5	435	
North: Centro Comercial Norte												
1 L	101			101	15	2000	8		0.422	36.9	104	
2 R			240	240	1	2000	27	8	0.350	14.3	101	
3 R			240	240	1	2000	27	8	0.350	14.3	101	
	101	0	479	580	4				0.422	18.2	104	

ALL VEHICLES	Total Flow	% HV	Cycle Time	Max X	Aver. Delay	Max Queue
	3265	4	56	0.719	17.6	435

Total flow period = 60 minutes. Peak flow period = 15 minutes.

Queue values in this table are 95% back of queue (feet).

Note: Basic Saturation Flows (in through car units) have been adjusted for grade, lane widths, parking manoeuvres and bus stops.

* Queue length exceeds short lane length due to specification of a percentile queue in the aaSIDRA Configuration File. For calculation of this statistic, you may specify the lane with full length.

Sea View II
Int. PR-3 & Acceso a Centro Comercial, Hora Pico PM, 2009
Intersection ID: 3
Actuated Isolated Signals, Cycle Time = 56

Table S.15 - CAPACITY AND LEVEL OF SERVICE

Mov No.	Mov Typ	Green Ratio (g/C) 1st grn	Green Ratio (g/C) 2nd grn	Total Flow (veh /h)	Total Cap. (veh /h)	Deg. of Satn (v/c)	Aver. Delay (sec)	LOS
West: PR-3 Oeste								
12	L	0.214*		571	794	0.719*	39.4	D
11	T	0.714		980	2740	0.358	3.6	A
				1551	3534	0.719	16.8	B
East: PR-3 Este								
21	T	0.429		1077	1542	0.698	17.9	B
23	R (Un2)	0.429*	0.286	57	82	0.694	28.7	C
				1134	1625	0.698	18.5	B
North: Centro Comercial Norte								
42	L	0.143		101	239	0.422	36.9	D
43	R (Un1)	0.482	0.143*	479	1369	0.350	14.3	B
				580	1608	0.422	18.2	B
ALL VEHICLES:				3265	6766	0.719	17.6	B
INTERSECTION (persons):				3918	6766	0.719	17.6	

Level of Service calculations are based on
average control delay including geometric delay (HCM criteria),
independent of the current delay definition used.
For the criteria, refer to the "Level of Service" topic in the
aaSIDRA Output Guide or the Output section of the on-line help.
* Maximum v/c ratio, or critical green periods

Sea View II
Int. PR-3 & Acceso a Centro Comercial, Hora Pico PM, 2009
Intersection ID: 3

Table S.23 - SENSITIVITY ANALYSIS RESULTS

Performance Measure	Smallest Value	Param Scale
Degree of Satn	0.719	60
Average Delay	17.6	60
Stop Rate	0.66	60
Max. Queue for Any Movement	16.1	50
Perf. Index	103.1	50
Cost total	625.9	60

Performance Measure	Largest Value	Param Scale
Total Vehicle Cap.	6766	60
Prac. Spare Cap.	25	60

Sea View II
Int. PR-3 & Acceso a Centro Comercial, Hora Pico PM, 2009
Intersection ID: 3
Actuated Isolated Signals, Cycle Time = 56

Table D.5 - PROGRESSION FACTORS & ACTUATED SIGNAL PARAMETERS

Mov No.	Control	Coord.	Arrival Type	Delay Prog. Factor	Queue Prog. Factor	Gap Settings es	Gap Settings eh	Disp. Grn. Settings 1st Grn Gmin	1st Grn Gmax	2nd Grn Gmin	2nd Grn Gmax
West: PR-3 Oeste											
12	VA	No	3	1.000	1.000	2.0	2.6	6	12		
11	VA	No	3	1.000	1.000	2.5	3.1	6	30		
East: PR-3 Este											
21	VA	No	3	1.000	1.000	2.5	3.1	6	30		
23	VA	No	3	1.000	1.000	2.5	3.1	6	30	6	30
North: Centro Comercial Norte											
42	VA	No	3	1.000	1.000	2.0	2.6	6	12		
43	VA	No	3	1.000	1.000	2.5	3.1	6	30	6	30

Sea View II
Int. PR-3 & Acceso a Centro Comercial, Hora Pico PM, 2009
Intersection ID: 3

Scaled sensitivity parameter: Maximum Green

Table V.23 - INTERSECTION SUMMARY FOR VARIABLE PARAMETER SCALE

Param Scale	Cycle Time	Total Veh.	Intersn Deg. of	Prac. Spare	Aver. Delay	Stop Rate	Longest Queue	Perf. Index	Cost Total

(%)	(sec)	Cap.	Satn	Cap.	(sec)		(veh)		$/h
50	52	6605	0.801	12	18.4	0.68	16.1	103.1	632.4
55	54	6684	0.756	19	17.9	0.67	16.6	103.1	628.3
60	56	6766	0.719	25	17.6	0.66	17.0	103.2	625.9
65	58	6663	0.797	13	19.5	0.68	18.1	107.7	644.3
70	60	6685	0.809	11	19.9	0.67	18.6	109.1	648.2
75	62	6704	0.821	10	20.3	0.67	19.1	110.5	652.3
80	64	6672	0.832	8	21.4	0.68	20.2	113.9	664.0
85	66	6689	0.845	7	21.4	0.67	20.6	114.3	664.4
90	68	6712	0.857	5	21.4	0.67	21.0	115.0	664.7
95	70	6682	0.869	4	22.1	0.68	22.1	117.6	673.2
100	72	6697	0.881	2	22.1	0.67	22.5	118.1	673.1
105	74	6711	0.893	1	22.1	0.67	23.0	118.8	673.5
110	76	6743	0.906	-1	22.1	0.67	22.8	119.6	649.2
115	78	6702	0.918	-2	22.7	0.67	24.4	121.7	681.0
120	80	6714	0.930	-3	22.7	0.66	24.8	122.4	681.5

--- End of aaSIDRA Output ---

ANEJO 4
ANALISI DE TRANSITO 2011, SIN PROYECTO
AASIDRA 2.0

Akcelik & Associates Pty Ltd - aaSIDRA 2.0.0.205

Servicios Técnicos Integrados
Francisco J. Reyes Registered User No. 50310
Licence Type: Professional, Single Computer

Time and Date of Analysis 3:12 AM, May 4,2009

Filename: F:\My Documents\Francisco\Consultores\April\Humacao\Sea View II\Sidra\53-VH-3-11AMS.OUT

Sea View II
InT. PR-3, Rampa PR-53 & Villas de Humacao, Hora Pico AM, 2011 Sin Proyecto
Intersection ID: 4

aaTraffic SIDRA US Highway Capacity Manual (2000) Version

RUN INFORMATION

Parameter sensitivity run: "Optimum" Maximum Green = 60.0 %

* Basic Parameters:
  Intersection Type: Signalised - Actuated Isolated
  For fully-actuated signal timings, the following specifications will be ignored:
    Any maximum cycle time specification
    Any user-given cycle time (unless phase times also given)
    User-given cycle and phase times (if variable flow scale run)
    Any variable cycle time specification
    Any green split priority specification
  Driving on the right-hand side of the road
  Input data specified in US units
  Default Values File No. 11
  Peak flow period (for performance): 15 minutes
  Unit time (for volumes): 60 minutes (Total Flow Period)
  Delay definition: Control delay
                    Geometric delay included
  HCM Delay and Queue Models option selected
  Level of Service based on: Delay (HCM method)
  Queue definition: Back of queue, 95th Percentile

* No. of Main (Timing-Capacity) Iterations = 3
  Comparison of last two iterations:
    Difference in intersection degree of satn = 0.0 %
    Difference in total vehicle capacity = 0.0 %
    Largest difference in eff. green times = 0 secs
    (max. value for stopping = 0 secs)

Sea View II
InT. PR-3, Rampa PR-53 & Villas de Humacao, Hora Pico AM, 2011 Sin Proyecto
Intersection ID: 4
Actuated Isolated Signals, Cycle Time = 124
Flow Scale = 103%

Table S.3 - INTERSECTION PARAMETERS

Critical Movements: 53(1st), 22, 11, 41, 32

L= 87 Y= 0.114 U= 0.213 T= 113.4

Cycle Time:

Minimum	Maximum	Practical	Chosen
70	NA	111	124

Intersection Level of Service	=	E
Worst movement Level of Service	=	F
Average intersection delay (s)	=	60.0
Largest average movement delay (s)	=	112.7
Largest back of queue, 95% (ft)	=	918
Performance Index	=	271.47
Degree of saturation (highest)	=	0.968
Practical Spare Capacity (lowest)	=	-7 %
Total vehicle capacity, all lanes (veh/h)	=	8159
Total vehicle flow (veh/h)	=	4128
Total person flow (pers/h)	=	4954
Total vehicle delay (veh-h/h)	=	68.76
Total person delay (pers-h/h)	=	82.51
Total effective vehicle stops (veh/h)	=	3588
Total effective person stops (pers/h)	=	4305
Total vehicle travel (veh-mi/h)	=	1718.7
Total cost ($/h)	=	1253.05
Total fuel (ga/h)	=	115.5
Total CO2 (kg/h)	=	1095.14

Sea View II
InT. PR-3, Rampa PR-53 & Villas de Humacao, Hora Pico AM, 2011 Sin Proyecto
Intersection ID: 4
Actuated Isolated Signals, Cycle Time = 124
Flow Scale = 103%

Table S.4 - PHASE INFORMATION

Phase Change Times: 0, 23, 38, 71, 101
Phase Green Times: 20, 12, 30, 27, 20

Current Phase Sequence No.: 1
Input phase sequence: A B C D E
Output phase sequence: A B C D E

Sea View II
InT. PR-3, Rampa PR-53 & Villas de Humacao, Hora Pico AM, 2011 Sin Proyecto
Intersection ID: 4
Actuated Isolated Signals, Cycle Time = 124
Flow Scale = 103%

Table S.6 - INTERSECTION PERFORMANCE

Total Flow	Deg. Satn	Total Delay	Total Delay	Aver. Delay	Prop. Queued	Eff. Stop	Longest Queue	Perf. Index	Aver. Speed

(veh/h)	x	(veh-h/h)	(pers-h/h)	(sec)		Rate	(ft)	(mph)
INTERSECTION (persons):								
4954	0.968	82.51	60.0	0.778	0.87		271.47	24.8

Queue values in this table are 95% back of queue (feet).

Sea View II
InT. PR-3, Rampa PR-53 & Villas de Humacao, Hora Pico AM, 2011 Sin Proyecto
Intersection ID: 4
Actuated Isolated Signals, Cycle Time = 124
Flow Scale = 103%

Table S.7 - LANE PERFORMANCE

Lane No.	Mov No.	Effective Green Times (sec) R1	G1	R2	G2	Dem Flow (veh /h)	Cap (veh /h)	Deg. Satn x	Aver. Delay (sec)	Eff. Stop Rate	Queue 95% Back (vehs)	(ft)	Shrt Lane (ft)
West: PR-3 Oeste													
1 T	11	94	30	0	0	441	457	0.964	85.5	1.04	35.0	918	
2 T	11	94	30	0	0	441	457	0.964	85.5	1.04	35.0	918	
SouthWest: PR-3 Oeste													
1 L	52	104	20	0	0	254	294	0.864	87.0	0.92	20.5	532	
2 R	53	3	20	15	86	209	1065	0.196	12.3	0.76	2.8	72	
South: Villas de Humacao Sur													
1 L	32	104	20	0	0	288	297	0.968	112.2	1.01	25.1	644	
2 LTR	32, 33	104	20	0	0	271	280	0.968	112.9	1.02	23.9	626	
East: PR-3 Este													
1 L	22	112	12	0	0	100	163	0.612	78.7	0.78	8.2*	228	160
2 T	21	79	45	0	0	540	710	0.761	43.6	0.83	33.2	845	
3 T	21	79	45	0	0	540	710	0.761	43.6	0.83	33.2	845	
4 R	23	3	45	3	73	28	1248	0.022	9.6	0.65	0.1	3	160
North: Rampa PR-53 Norte													
1 L	42	97	27	0	0	213	406	0.525	58.7	0.82	14.3	364	
2 LT	42, 41	97	27	0	0	208	396	0.525	55.2	0.79	14.0	370	
3 R	43	0	124	0	0	596	1674	0.356	9.2	0.65	15.2#		60

\# Density (passenger cars per km or mile)
* Queue length exceeds short lane length due to specification of a percentile queue in the aaSIDRA Configuration File. For calculation of this statistic, you may specify the lane with full length.

Sea View II
InT. PR-3, Rampa PR-53 & Villas de Humacao, Hora Pico AM, 2011 Sin Proyecto
Intersection ID: 4
Actuated Isolated Signals, Cycle Time = 124
Flow Scale = 103%

Table S.10 - MOVEMENT CAPACITY AND PERFORMANCE SUMMARY

Mov No.	Mov Typ	Dem Flow (veh /h)	Total Cap. (veh /h)	Lane Util (%)	Deg. Satn x	Eff. Grn 1st Grn	Eff. Grn 2nd Grn	Aver. Delay (sec)	Eff. Stop Rate	95% Back of Queue (veh)	Perf. Index
West: PR-3 Oeste											
11	T	881	914	100	0.964	30*		85.5	1.04	35.0	76.67
SouthWest: PR-3 Oeste											
52	L	254	294	100	0.864	20		87.0	0.92	20.5	21.32
53	R (Un2)	209	1065	100	0.196	20*	86	12.3	0.76	2.8	5.13
South: Villas de Humacao Sur											
32	L	414	428	100	0.968*	20*		112.7	1.02	25.1	39.96
33	TR (Un1)	145	150	100	0.968*	20		112.0	1.02	23.9	14.00
East: PR-3 Este											
22	L	100	163	100	0.613	12*		78.7	0.78	8.2	7.81
21	T	1080	1420	100	0.761	45		43.6	0.83	33.2	68.34
23	R (Und)	28	1249<	100	0.022	45	73	9.6	0.65	0.1	0.51
North: Rampa PR-53 Norte											
42	L	335	638	100	0.525	27		58.7	0.82	14.3	22.37
41	T	86	164	100	0.525	27*		49.7	0.76	14.0	5.51
43	R (Con)	596	1674	100	0.356	124		9.2	0.65	15.2 #	9.86

< Reduced capacity due to a short lane effect
* Maximum degree of saturation, or critical green periods
\# Largest density (passenger cars per km or mile) for any lane

---

Sea View II
InT. PR-3, Rampa PR-53 & Villas de Humacao, Hora Pico AM, 2011 Sin Proyecto
Intersection ID: 4
Actuated Isolated Signals, Cycle Time = 124
Flow Scale = 103%

Table S.14 - SUMMARY OF INPUT AND OUTPUT DATA

Lane No.	Demand Flow (veh/h) L	T	R	Tot	%HV	Adj. Basic Satf.	Eff Grn (secs) 1st	2nd	Deg Sat x	Aver. Delay (sec)	Longest Queue (ft)	Shrt Lane (ft)
West: PR-3 Oeste												
1 T		441		441	6	2000	30		0.964	85.5	918	
2 T		441		441	6	2000	30		0.964	85.5	918	
	0	881	0	881	6				0.964	85.5	918	
SouthWest: PR-3 Oeste												
1 L	254			254	5	2000	20		0.864	87.0	532	
2 R			209	209	6	2000	20	86	0.196	12.3	72	
	254	0	209	463	5				0.864	53.3	532	

South: Villas de Humacao Sur												
1	L	288			288	3	2000	20		0.968	112.2	644	
2	LTR	126	33	112	271	6	2000	20		0.968	112.9	626	
		414	33	112	559	5				0.968	112.5	644	
East: PR-3 Este													
1	L	100			100	14	2000	12		0.612	78.7	228*	160
2	T		540		540	2	2000	45		0.761	43.6	845	
3	T		540		540	2	2000	45		0.761	43.6	845	
4	R			28	28	14	2000	45	73	0.022	9.6	3	160
		100	1080	28	1208	3				0.761	45.7	845	
North: Rampa PR-53 Norte													
1	L	213			213	2	2000	27		0.525	58.7	364	
2	LT	122	86		208	7	2000	27		0.525	55.2	370	
3	R			596	596	2	2000	124		0.356	9.2		60
		335	86	596	1017	3				0.525	29.0	370	

ALL VEHICLES	Total Flow	% HV	Cycle Time	Max X	Aver. Delay	Max Queue
	4128	4	124	0.968	60.0	918

Total flow period = 60 minutes. Peak flow period = 15 minutes.

Queue values in this table are 95% back of queue (feet).

Note: Basic Saturation Flows (in through car units) have been adjusted for grade, lane widths, parking manoeuvres and bus stops.

* Queue length exceeds short lane length due to specification of a percentile queue in the aaSIDRA Configuration File. For calculation of this statistic, you may specify the lane with full length.

Sea View II
InT. PR-3, Rampa PR-53 & Villas de Humacao, Hora Pico AM, 2011 Sin Proyecto
Intersection ID: 4
Actuated Isolated Signals, Cycle Time = 124
Flow Scale = 103%

Table S.15 - CAPACITY AND LEVEL OF SERVICE

Mov No.	Mov Typ	Green Ratio 1st grn	Green Ratio 2nd grn	Time (g/C)	Total Flow (veh /h)	Total Cap. (veh /h)	Deg. of Satn (v/c)	Aver. Delay (sec)	LOS
West: PR-3 Oeste									
11	T	0.242*			881	914	0.964	85.5	F
					881	914	0.964	85.5	F

SouthWest: PR-3 Oeste							
52 L		0.161		254	294	0.864	87.0	F
53 R	(Un2)	0.161*	0.694	209	1065	0.196	12.3	B
				463	1359	0.864	53.3	D
South: Villas de Humacao Sur								
32 L		0.161*		414	428	0.968*	112.7	F
33 TR	(Un1)	0.161		145	150	0.968*	112.0	F
				559	577	0.968	112.5	F
East: PR-3 Este								
22 L		0.097*		100	163	0.613	78.7	E
21 T		0.363		1080	1420	0.761	43.6	D
23 R	(Und)	0.363	0.589	28	1249<	0.022	9.6	A
				1208	2832	0.761	45.7	D
North: Rampa PR-53 Norte								
42 L		0.218		335	638	0.525	58.7	E
41 T		0.218*		86	164	0.525	49.7	D
43 R	(Con)	1.000		596	1674	0.356	9.2	B#
				1017	2476	0.525	28.9	C
ALL VEHICLES:				4128	8159	0.968	60.0	E
INTERSECTION (persons):				4954	8159	0.968	60.0	

Level of Service calculations are based on
average control delay including geometric delay (HCM criteria),
independent of the current delay definition used.
For the criteria, refer to the "Level of Service" topic in the
aaSIDRA Output Guide or the Output section of the on-line help.

\# Level Of Service for continuous movements based on density
< Reduced capacity due to a short lane effect
* Maximum v/c ratio, or critical green periods

Sea View II
InT. PR-3, Rampa PR-53 & Villas de Humacao, Hora Pico AM, 2011 Sin Proyecto
Intersection ID: 4

Table S.23 - SENSITIVITY ANALYSIS RESULTS

Performance Measure	Smallest Value	Param Scale
Degree of Satn	0.968	60
Average Delay	60.0	60
Stop Rate	0.81	120
Max. Queue for Any Movement	33.3	75
Perf. Index	270.5	55

Cost total	1251.6	65

Performance Measure	Largest Value	Param Scale
Total Vehicle Cap.	8464	100
Prac. Spare Cap.	-7	60

Sea View II
InT. PR-3, Rampa PR-53 & Villas de Humacao, Hora Pico AM, 2011 Sin Proyecto
Intersection ID: 4
Actuated Isolated Signals, Cycle Time = 124
Flow Scale = 103%

Table D.5 - PROGRESSION FACTORS & ACTUATED SIGNAL PARAMETERS

Mov No.	Control	Coord.	Arrival Type	Delay Prog. Factor	Queue Prog. Factor	Gap Settings es	Gap Settings eh	Disp. Grn. Settings 1st Grn Gmin	1st Grn Gmax	2nd Grn Gmin	2nd Grn Gmax
West: PR-3 Oeste											
11	VA	No	3	1.000	1.000	2.5	3.1	5	30		
SouthWest: PR-3 Oeste											
52	VA	No	3	1.000	1.000	2.0	2.6	20	15		
53	VA	No	3	1.000	1.000	2.5	3.1	20	15	6	30
South: Villas de Humacao Sur											
32	VA	No	3	1.000	1.000	2.0	2.6	20	15		
33	VA	No	3	1.000	1.000	2.5	3.1	20	15		
East: PR-3 Este											
22	VA	No	3	1.000	1.000	2.0	2.6	5	12		
21	VA	No	3	1.000	1.000	2.5	3.1	5	30		
23	VA	No	3	1.000	1.000	2.5	3.1	5	30	6	30
North: Rampa PR-53 Norte											
42	VA	No	3	1.000	1.000	2.0	2.6	5	12		
41	VA	No	3	1.000	1.000	2.5	3.1	5	30		
43	VA	No	3	1.000	1.000	2.5	3.1	6	30		

Sea View II
InT. PR-3, Rampa PR-53 & Villas de Humacao, Hora Pico AM, 2011 Sin Proyecto
Intersection ID: 4

Scaled sensitivity parameter: Maximum Green

Table V.23 - INTERSECTION SUMMARY FOR VARIABLE PARAMETER SCALE

Param Scale (%)	Cycle Time (sec)	Total Veh. Cap.	Intersn Deg. of Satn	Prac. Spare Cap.	Aver. Delay (sec)	Stop Rate	Longest Queue (veh)	Perf. Index	Cost Total $/h

50	115	7990	1.073	-16	63.8	0.92	37.9	275.2	1302.7
55	120	8093	1.000	-10	60.4	0.88	35.8	270.5	1260.4
60	124	8159	0.968	-7	60.0	0.87	35.0	271.5	1253.0
65	129	8223	1.007	-11	60.1	0.85	34.0	273.7	1251.6
70	132	8274	1.031	-13	60.3	0.85	33.5	275.3	1253.3
75	137	8342	1.070	-16	62.2	0.84	33.3	281.2	1272.8
80	141	8382	1.101	-18	64.4	0.84	33.5	287.5	1297.1
85	148	8422	1.101	-18	65.7	0.83	34.3	294.1	1310.1
90	156	8417	1.059	-15	65.7	0.82	35.9	299.9	1309.3
95	163	8451	1.061	-15	67.2	0.82	36.7	307.0	1325.6
100	169	8464	1.056	-15	68.4	0.82	37.7	313.0	1338.1
105	174	8457	1.045	-14	69.3	0.82	38.8	318.3	1347.5
110	182	8451	1.015	-11	70.0	0.81	40.4	325.2	1353.5
115	187	8445	1.007	-11	71.0	0.81	41.5	330.7	1364.6
120	192	8439	0.999	-10	72.1	0.81	42.7	336.4	1376.2

--- End of aaSIDRA Output ---

Akcelik & Associates Pty Ltd - aaSIDRA 2.0.0.205

Servicios Técnicos Integrados
Francisco J. Reyes Registered User No. 50310
Licence Type: Professional, Single Computer

Time and Date of Analysis 3:18 AM, May 4,2009

Filename: F:\My Documents\Francisco\Consultores\April\Humacao\Sea View II\Sidra\53-VH-3-11PMS.OUT

Sea View II
InT. PR-3, Rampa PR-53 & Villas de Humacao, Hora Pico PM, 2011 Sin Proyecto
Intersection ID: 4

aaTraffic SIDRA US Highway Capacity Manual (2000) Version

RUN INFORMATION

Parameter sensitivity run: "Optimum" Maximum Green = 80.0 s

* Basic Parameters:
  Intersection Type: Signalised - Actuated Isolated
  For fully-actuated signal timings, the following specifications will be ignored:
    Any maximum cycle time specification
    Any user-given cycle time (unless phase times also given)
    User-given cycle and phase times (if variable flow scale run)
    Any variable cycle time specification
    Any green split priority specification
  Driving on the right-hand side of the road
  Input data specified in US units
  Default Values File No. 11
  Peak flow period (for performance): 15 minutes
  Unit time (for volumes): 60 minutes (Total Flow Period)
  Delay definition: Control delay
                Geometric delay included
  HCM Delay and Queue Models option selected
  Level of Service based on: Delay (HCM method)
  Queue definition: Back of queue, 95th Percentile

* No. of Main (Timing-Capacity) Iterations = 3
  Comparison of last two iterations:
    Difference in intersection degree of satn = 0.7 %
    Difference in total vehicle capacity = 0.1 %
    Largest difference in eff. green times = 1 secs
    (max. value for stopping = 1 secs)
  Information on Previous Iteration:
    Cycle Time = 140
    Phase Times: 0, 23, 42, 85, 117
    Critical Movements: 53(1st), 22, 11, 41, 32

Sea View II

InT. PR-3, Rampa PR-53 & Villas de Humacao, Hora Pico PM, 2011 Sin Proyecto
Intersection ID: 4
Actuated Isolated Signals, Cycle Time = 139
Flow Scale = 103%

Table S.3 - INTERSECTION PARAMETERS

Critical Movements: 53(1st), 22, 11, 41, 32

L= 111 Y= 0.106 U= 0.200 T= 138.8

Cycle Time:

Minimum	Maximum	Practical	Chosen
70	NA	139	139

Intersection Level of Service	=	D
Worst movement Level of Service	=	F
Average intersection delay (s)	=	53.6
Largest average movement delay (s)	=	142.8
Largest back of queue, 95% (ft)	=	927
Performance Index	=	255.21
Degree of saturation (highest)	=	1.047
Practical Spare Capacity (lowest)	=	-14 %
Total vehicle capacity, all lanes (veh/h)	=	8513
Total vehicle flow (veh/h)	=	3942
Total person flow (pers/h)	=	4730
Total vehicle delay (veh-h/h)	=	58.74
Total person delay (pers-h/h)	=	70.49
Total effective vehicle stops (veh/h)	=	3213
Total effective person stops (pers/h)	=	3855
Total vehicle travel (veh-mi/h)	=	1642.2
Total cost ($/h)	=	1109.46
Total fuel (ga/h)	=	103.1
Total CO2 (kg/h)	=	977.07

Sea View II
InT. PR-3, Rampa PR-53 & Villas de Humacao, Hora Pico PM, 2011 Sin Proyecto
Intersection ID: 4
Actuated Isolated Signals, Cycle Time = 139
Flow Scale = 103%

Table S.4 - PHASE INFORMATION

Phase Change Times: 0, 23, 42, 85, 116
Phase Green Times: 20, 16, 40, 28, 20

Current Phase Sequence No.: 1
Input phase sequence: A B C D E
Output phase sequence: A B C D E

Sea View II
InT. PR-3, Rampa PR-53 & Villas de Humacao, Hora Pico PM, 2011 Sin Proyecto
Intersection ID: 4
Actuated Isolated Signals, Cycle Time = 139
Flow Scale = 103%

Table S.6 - INTERSECTION PERFORMANCE

Total Flow (veh/h)	Deg. Satn x	Total Delay (veh-h/h)	Total Delay (pers-h/h)	Aver. Delay (sec)	Prop. Queued	Eff. Stop Rate	Longest Queue (ft)	Perf. Index	Aver. Speed (mph)
INTERSECTION (persons):									
4730	1.047		70.49	53.6	0.766	0.82		255.21	26.5

Queue values in this table are 95% back of queue (feet).

Sea View II
InT. PR-3, Rampa PR-53 & Villas de Humacao, Hora Pico PM, 2011 Sin Proyecto
Intersection ID: 4
Actuated Isolated Signals, Cycle Time = 139
Flow Scale = 103%

Table S.7 - LANE PERFORMANCE

Lane No.	Mov No.	Effective Green Times (sec) R1	G1	R2	G2	Dem Flow (veh /h)	Cap (veh /h)	Deg. Satn x	Aver. Delay (sec)	Eff. Stop Rate	Queue 95% Back (vehs)	(ft)	Shrt Lane (ft)
West: PR-3 Oeste													
1 T	11	99	40	0	0	481	564	0.853	64.4	0.90	36.5	927	
2 T	11	99	40	0	0	481	564	0.853	64.4	0.90	36.5	927	
SouthWest: PR-3 Oeste													
1 L	52	119	20	0	0	278	266	1.047	142.8	1.08	28.6	734	
2 R	53	3	20	14	102	289	1086	0.266	12.0	0.76	3.9	100	
South: Villas de Humacao Sur													
1 L	32	119	20	0	0	182	264	0.691	81.2	0.82	15.4	397	
2 LTR	32, 33	119	20	0	0	176	255	0.691	79.0	0.81	14.9	386	
East: PR-3 Este													
1 L	22	123	16	0	0	71	135	0.525	78.5	0.77	6.2*	178	160
2 T	21	80	59	0	0	569	835	0.681	38.1	0.76	34.7	880	
3 T	21	80	59	0	0	569	835	0.681	38.1	0.76	34.7	880	
4 R	23	3	59	3	74	89	1314	0.068	9.4	0.65	0.3	9	160
North: Rampa PR-53 Norte													
1 L	42	111	28	0	0	191	364	0.526	66.5	0.82	14.5	380	
2 LT	42, 41	111	28	0	0	190	361	0.526	62.4	0.79	14.4	387	
3 R	43	0	139	0	0	376	1672	0.225	9.2	0.65	9.6#		60

\# Density (passenger cars per km or mile)
* Queue length exceeds short lane length due to specification of a percentile queue in the aaSIDRA Configuration File. For calculation of this statistic, you may specify the lane with full length.

Sea View II
InT. PR-3, Rampa PR-53 & Villas de Humacao, Hora Pico PM, 2011 Sin Proyecto
Intersection ID: 4
Actuated Isolated Signals, Cycle Time = 139
Flow Scale = 103%

Table S.10 - MOVEMENT CAPACITY AND PERFORMANCE SUMMARY

Mov No.	Mov Typ	Dem Flow (veh /h)	Total Cap. (veh /h)	Lane Util (%)	Deg. Satn x	Eff. Grn 1st Grn	Eff. Grn 2nd Grn	Aver. Delay (sec)	Eff. Stop Rate	95% Back of Queue (veh)	Perf. Index
West: PR-3 Oeste											
11	T	962	1128	100	0.853	40*		64.4	0.90	36.5	75.51
SouthWest: PR-3 Oeste											
52	L	278	266	100	1.047*	20		142.8	1.08	28.6	32.01
53	R (Un2)	289	1086	100	0.266	20*	102	12.0	0.76	3.9	7.14
South: Villas de Humacao Sur											
32	L	221	320	100	0.691	20*		81.3	0.82	15.4	18.21
33	TR (Un1)	137	198	100	0.691	20		78.2	0.81	14.9	11.19
East: PR-3 Este											
22	L	71	135<	100	0.525	16*		78.5	0.77	6.2	5.69
21	T	1138	1670	100	0.682	59		38.1	0.76	34.7	69.81
23	R (Und)	89	1314<	100	0.068	59	74	9.4	0.65	0.3	1.64
North: Rampa PR-53 Norte											
42	L	293	557	100	0.526	28		66.5	0.82	14.5	21.56
41	T	88	167	100	0.526	28*		57.3	0.76	14.4	6.23
43	R (Con)	376	1672	100	0.225	139		9.2	0.65	9.6 #	6.22

< Reduced capacity due to a short lane effect
* Maximum degree of saturation, or critical green periods
# Largest density (passenger cars per km or mile) for any lane

---

Sea View II
InT. PR-3, Rampa PR-53 & Villas de Humacao, Hora Pico PM, 2011 Sin Proyecto
Intersection ID: 4
Actuated Isolated Signals, Cycle Time = 139
Flow Scale = 103%

Table S.14 - SUMMARY OF INPUT AND OUTPUT DATA

Lane No.	Demand Flow (veh/h) L	T	R	Tot	%HV	Adj. Basic Satf.	Eff Grn (secs) 1st	2nd	Deg Sat x	Aver. Delay (sec)	Longest Queue (ft)	Shrt Lane (ft)
West: PR-3 Oeste												
1	T	481		481	2	2000	40		0.853	64.4	927	
2	T	481		481	2	2000	40		0.853	64.4	927	
	0	962	0	962	2				0.853	64.4	927	

SouthWest: PR-3 Oeste												
1 L	278			278	3	2000	20		1.047	142.8	734	
2 R			289	289	2	2000	20	102	0.266	12.0	100	
	278	0	289	567	2				1.047	76.1	734	
South: Villas de Humacao Sur												
1 L	182			182	4	2000	20		0.691	81.2	397	
2 LTR	39	57	80	176	4	2000	20		0.691	79.0	386	
	221	57	80	358	4				0.691	80.1	397	
East: PR-3 Este												
1 L	71			71	18	2000	16		0.525	78.5	178*	160
2 T		569		569	2	2000	59		0.681	38.1	880	
3 T		569		569	2	2000	59		0.681	38.1	880	
4 R			89	89	7	2000	59	74	0.068	9.4	9	160
	71	1138	89	1298	3				0.681	38.3	880	
North: Rampa PR-53 Norte												
1 L	191			191	6	2000	28		0.526	66.5	380	
2 LT	102	88		190	9	2000	28		0.526	62.4	387	
3 R			376	376	2	2000	139		0.225	9.2		60
	293	88	376	757	5				0.526	37.0	387	

ALL VEHICLES	Total Flow	% HV	Cycle Time	Max X	Aver. Delay	Max Queue
	3942	3	139	1.047	53.6	927

Total flow period = 60 minutes. Peak flow period = 15 minutes.

Queue values in this table are 95% back of queue (feet).

Note: Basic Saturation Flows (in through car units) have been adjusted for grade, lane widths, parking manoeuvres and bus stops.

* Queue length exceeds short lane length due to specification of a percentile queue in the aaSIDRA Configuration File. For calculation of this statistic, you may specify the lane with full length.

Sea View II
InT. PR-3, Rampa PR-53 & Villas de Humacao, Hora Pico PM, 2011 Sin Proyecto
Intersection ID: 4
Actuated Isolated Signals, Cycle Time = 139
Flow Scale = 103%

Table S.15 - CAPACITY AND LEVEL OF SERVICE

Mov No.	Mov Typ	Green Ratio 1st grn	Green Ratio 2nd grn	Time (g/C)	Total Flow (veh /h)	Total Cap. (veh /h)	Deg. of Satn (v/c)	Aver. Delay (sec)	LOS

West: PR-3 Oeste							
11 T		0.288*		962	1128	0.853	64.4	E
				962	1128	0.853	64.4	E
SouthWest: PR-3 Oeste							
52 L		0.144		278	266	1.047*	142.8	F
53 R	(Un2)	0.144*	0.734	289	1086	0.266	12.0	B
				567	1352	1.047	76.1	E
South: Villas de Humacao Sur							
32 L		0.144*		221	320	0.691	81.3	F
33 TR	(Un1)	0.144		137	198	0.691	78.2	E
				358	518	0.691	80.1	F
East: PR-3 Este							
22 L		0.115*		71	135<	0.525	78.5	E
21 T		0.424		1138	1670	0.682	38.1	D
23 R	(Und)	0.424	0.532	89	1314<	0.068	9.4	A
				1298	3119	0.682	38.3	D
North: Rampa PR-53 Norte							
42 L		0.201		293	557	0.526	66.5	E
41 T		0.201*		88	167	0.526	57.3	E
43 R	(Con)	1.000		376	1672	0.225	9.2	A#
				757	2397	0.526	37.0	D
ALL VEHICLES:				3942	8513	1.047	53.6	D
INTERSECTION (persons):				4730	8513	1.047	53.6	

Level of Service calculations are based on
average control delay including geometric delay (HCM criteria),
independent of the current delay definition used.
For the criteria, refer to the "Level of Service" topic in the
aaSIDRA Output Guide or the Output section of the on-line help.

\# Level Of Service for continuous movements based on density
< Reduced capacity due to a short lane effect
* Maximum v/c ratio, or critical green periods

Sea View II
InT. PR-3, Rampa PR-53 & Villas de Humacao, Hora Pico PM, 2011 Sin Proyecto
Intersection ID: 4

Table S.23 - SENSITIVITY ANALYSIS RESULTS

Performance Measure	Smallest Value	Param Scale
Degree of Satn	0.956	65

Average Delay	53.6	80
Stop Rate	0.80	120
Max. Queue for Any Movement	36.5	80
Perf. Index	251.6	65
Cost total	1109.5	80

Performance Measure	Largest Value	Param Scale
Total Vehicle Cap.	8607	120
Prac. Spare Cap.	-6	65

Sea View II
InT. PR-3, Rampa PR-53 & Villas de Humacao, Hora Pico PM, 2011 Sin Proyecto
Intersection ID: 4
Actuated Isolated Signals, Cycle Time = 139
Flow Scale = 103%

Table D.5 - PROGRESSION FACTORS & ACTUATED SIGNAL PARAMETERS

Mov No.	Control	Coord.	Arrival Type	Delay Prog. Factor	Queue Prog. Factor	Gap Settings es	Gap Settings eh	Disp. Grn. Settings 1st Grn Gmin	1st Grn Gmax	2nd Grn Gmin	2nd Grn Gmax
West: PR-3 Oeste											
11	VA	No	3	1.000	1.000	2.5	3.1	5	40		
SouthWest: PR-3 Oeste											
52	VA	No	3	1.000	1.000	2.0	2.6	20	20		
53	VA	No	3	1.000	1.000	2.5	3.1	20	20	6	40
South: Villas de Humacao Sur											
32	VA	No	3	1.000	1.000	2.0	2.6	20	20		
33	VA	No	3	1.000	1.000	2.5	3.1	20	20		
East: PR-3 Este											
22	VA	No	3	1.000	1.000	2.0	2.6	5	16		
21	VA	No	3	1.000	1.000	2.5	3.1	5	40		
23	VA	No	3	1.000	1.000	2.5	3.1	5	40	6	40
North: Rampa PR-53 Norte											
42	VA	No	3	1.000	1.000	2.0	2.6	5	16		
41	VA	No	3	1.000	1.000	2.5	3.1	5	40		
43	VA	No	3	1.000	1.000	2.5	3.1	6	40		

Sea View II
InT. PR-3, Rampa PR-53 & Villas de Humacao, Hora Pico PM, 2011 Sin Proyecto
Intersection ID: 4

Scaled sensitivity parameter: Maximum Green

Table V.23 - INTERSECTION SUMMARY FOR VARIABLE PARAMETER SCALE

Param Scale (%)	Cycle Time (sec)	Total Veh. Cap.	Intersn Deg. of Satn	Prac. Spare Cap.	Aver. Delay (sec)	Stop Rate	Longest Queue (veh)	Perf. Index	Cost Total $/h
50	114	8103	1.119	-20	66.2	0.95	42.8	270.1	1260.4
55	119	8208	1.043	-14	59.8	0.91	40.2	259.8	1186.9
60	123	8275	1.006	-11	57.9	0.88	39.4	257.8	1162.9
65	127	8348	0.956	-6	54.2	0.85	37.4	251.6	1119.2
70	131	8396	0.986	-9	54.0	0.84	37.2	253.1	1116.0
75	136	8466	1.024	-12	53.7	0.83	36.7	254.5	1111.4
80	139	8513	1.047	-14	53.6	0.82	36.5	255.2	1109.5
85	146	8555	1.047	-14	54.6	0.81	37.3	260.9	1118.6
90	155	8544	1.015	-11	56.9	0.81	39.5	271.7	1142.1
95	162	8580	1.017	-11	58.0	0.80	40.3	277.6	1152.5
100	168	8593	1.012	-11	59.3	0.80	41.4	283.8	1165.6
105	174	8604	1.008	-11	60.6	0.80	42.4	289.9	1179.0
110	182	8598	0.979	-8	62.5	0.80	44.2	298.8	1197.3
115	187	8591	0.971	-7	63.9	0.80	45.5	305.1	1212.6
120	192	8607	0.964	-7	64.7	0.80	46.2	309.3	1220.2

--- End of aaSIDRA Output ---

Akcelik & Associates Pty Ltd - aaSIDRA 2.0.0.205

Servicios Técnicos Integrados
Francisco J. Reyes Registered User No. 50310
Licence Type: Professional, Single Computer

Time and Date of Analysis 6:42 AM, May 4,2009

Filename: F:\My Documents\Francisco\Consultores\April\Humacao\Sea View II\Sidra\925-3-11AMS.OUT

Sea View II
Intersecci?n PR-925 & PR-3; Hora Pico AM, 2011 Sin Proyecto
Intersection ID: 1

aaTraffic SIDRA US Highway Capacity Manual (2000) Version

RUN INFORMATION
---

* Basic Parameters:
  Intersection Type: Unsignalised - Two-Way Stop Control
  Driving on the right-hand side of the road
  Input data specified in US units
  Default Values File No. 11
  Peak flow period (for performance): 15 minutes
  Unit time (for volumes): 60 minutes (Total Flow Period)
  Delay definition: Control delay
  Geometric delay included
  HCM Delay and Queue Models option selected
  Level of Service based on: Delay (HCM method)
  Queue definition: Back of queue, 95th Percentile

Sea View II
Intersecci?n PR-925 & PR-3; Hora Pico AM, 2011 Sin Proyecto
Intersection ID: 1
Stop Sign Controlled Intersection
Flow Scale = 103%

Table S.3 - INTERSECTION PARAMETERS

Intersection Level of Service	=	E
Worst movement Level of Service	=	F
Average intersection delay (s)	=	38.9
Largest average movement delay (s)	=	233.0
Largest back of queue, 95% (ft)	=	898
Performance Index	=	56.26
Degree of saturation (highest)	=	1.350
Practical Spare Capacity (lowest)	=	-41
Total vehicle capacity, all lanes (veh/h)	=	3546
Total vehicle flow (veh/h)	=	1781
Total person flow (pers/h)	=	2137
Total vehicle delay (veh-h/h)	=	19.26
Total person delay (pers-h/h)	=	23.11

Total effective vehicle stops (veh/h)	=	707
Total effective person stops (pers/h)	=	848
Total vehicle travel (veh-mi/h)	=	778.1
Total cost ($/h)	=	441.65
Total fuel (ga/h)	=	44.7
Total CO2 (kg/h)	=	423.90

Sea View II
Intersecci?n PR-925 & PR-3; Hora Pico AM, 2011 Sin Proyecto
Intersection ID: 1
Stop Sign Controlled Intersection
Flow Scale = 103%

Table S.6 - INTERSECTION PERFORMANCE

Total Flow (veh/h)	Deg. Satn x	Total Delay (veh-h/h)	Total Delay (pers-h/h)	Aver. Delay (sec)	Prop. Queued	Eff. Stop Rate	Longest Queue (ft)	Perf. Index	Aver. Speed (mph)
INTERSECTION (persons):									
2137	1.350		23.11	38.9	0.520	0.40		56.26	33.9

Queue values in this table are 95% back of queue (feet).

Sea View II
Intersecci?n PR-925 & PR-3; Hora Pico AM, 2011 Sin Proyecto
Intersection ID: 1
Stop Sign Controlled Intersection
Flow Scale = 103%

Table S.7 - LANE PERFORMANCE

Lane No.	Mov No.	Dem Flow (veh /h)	Cap (veh /h)	Deg. Satn x	Aver. Delay (sec)	Eff. Stop Rate	Queue 95% Back (vehs)	Queue 95% Back (ft)	Short Lane (ft)
West: PR-3 Oeste									
1 LT	12	665	1408	0.472	11.9	0.20	8.4	217	
East: PR-3 Este									
1 TR	22, 23	855	1944	0.440	0.7	0.05	0.0	0	
North: PR-925 Norte									
1 LR	42, 43	261	194	1.346	233.0	2.05	34.2	898	

Sea View II
Intersecci?n PR-925 & PR-3; Hora Pico AM, 2011 Sin Proyecto
Intersection ID: 1
Stop Sign Controlled Intersection
Flow Scale = 103%

Table S.10 - MOVEMENT CAPACITY AND PERFORMANCE SUMMARY

Mov No.	Mov Typ	Dem Flow (veh /h)	Total Cap. (veh /h)	Lane Util (%)	Deg. Satn x	Aver. Delay (sec)	Eff. Stop Rate	95% Back of Queue (veh)	Perf. Index
West: PR-3 Oeste									
12	LT	665	1408	100	0.472	11.9	0.20	8.4	12.20
East: PR-3 Este									
22	T	801	1821	100	0.440	0.0	0.00	0.0	7.80
23	R	54	123	100	0.439	10.9	0.74	0.0	0.90
North: PR-925 Norte									
42	L	81	60	100	1.350*	233.0	1.96	34.2	10.93
43	R	180	134	100	1.343	233.0	2.09	34.2	24.42

* Maximum degree of saturation

Sea View II
Intersecci?n PR-925 & PR-3; Hora Pico AM, 2011 Sin Proyecto
Intersection ID: 1
Stop Sign Controlled Intersection
Flow Scale = 103%

Table S.14 - SUMMARY OF INPUT AND OUTPUT DATA

Lane No.	Demand Flow (veh/h) L	T	R	Tot	%HV	Adj. Basic Satf.	Eff Grn (secs) 1st	2nd	Deg Sat x	Aver. Delay (sec)	Longest Queue (ft)	Shrt Lane (ft)
West: PR-3 Oeste												
1 LT	120	545		665	5				0.472	11.9	217	
	120	545	0	665	5				0.472	11.9	217	
East: PR-3 Este												
1 TR		801	54	855	2				0.440	0.7	0	
	0	801	54	855	2				0.440	0.7		
North: PR-925 Norte												
1 LR	81		180	261	6				1.346	233.0	898	
	81	0	180	261	6				1.346	233.0	898	
ALL VEHICLES				Total Flow 1781	% HV 4				Max X 1.350	Aver. Delay 38.9	Max Queue 898	

Total flow period = 60 minutes. Peak flow period = 15 minutes.

Queue values in this table are 95% back of queue (feet).

Note: Basic Saturation Flows are not adjusted at roundabouts or sign-controlled intersections and apply only to continuous lanes.

Sea View II
Intersecci?n PR-925 & PR-3; Hora Pico AM, 2011 Sin Proyecto
Intersection ID: 1
Stop Sign Controlled Intersection
Flow Scale = 103%

Table S.15 - CAPACITY AND LEVEL OF SERVICE

Mov No.	Mov Typ	Total Flow (veh /h)	Total Cap. (veh /h)	Deg. of Satn (v/c)	Aver. Delay (sec)	LOS
West: PR-3 Oeste						
12	LT	665	1408	0.472	11.9	B
		665	1408	0.472	11.9	B
East: PR-3 Este						
22	T	801	1821	0.440	0.0	A
23	R	54	123	0.439	10.9	B
		855	1944	0.440	0.7	A
North: PR-925 Norte						
42	L	81	60	1.350*	233.0	F
43	R	180	134	1.343	233.0	F
		261	194	1.350	233.0	F
ALL VEHICLES:		1781	3546	1.350	38.9	E

Level of Service calculations are based on average control delay including geometric delay (HCM criteria), independent of the current delay definition used.
For the criteria, refer to the "Level of Service" topic in the aaSIDRA Output Guide or the Output section of the on-line help.
* Maximum v/c ratio, or critical green periods

--- End of aaSIDRA Output ---

Akcelik & Associates Pty Ltd - aaSIDRA 2.0.0.205

Servicios Técnicos Integrados
Francisco J. Reyes Registered User No. 50310
Licence Type: Professional, Single Computer

Time and Date of Analysis 3:19 AM, May 4,2009

Filename: F:\My Documents\Francisco\Consultores\April\Humacao\Sea View II\Sidra\925-3-11PMS.OUT

Sea View II
Intersecci?n PR-925 & PR-3; Hora Pico PM, 2011 Sin Proyecto
Intersection ID: 1

aaTraffic SIDRA US Highway Capacity Manual (2000) Version

RUN INFORMATION
---

* Basic Parameters:
  Intersection Type: Unsignalised - Two-Way Stop Control
  Driving on the right-hand side of the road
  Input data specified in US units
  Default Values File No. 11
  Peak flow period (for performance): 15 minutes
  Unit time (for volumes): 60 minutes (Total Flow Period)
  Delay definition: Control delay
  Geometric delay included
  HCM Delay and Queue Models option selected
  Level of Service based on: Delay (HCM method)
  Queue definition: Back of queue, 95th Percentile

Sea View II
Intersecci?n PR-925 & PR-3; Hora Pico PM, 2011 Sin Proyecto
Intersection ID: 1
Stop Sign Controlled Intersection
Flow Scale = 103%

Table S.3 - INTERSECTION PARAMETERS

Intersection Level of Service	=	A
Worst movement Level of Service	=	F
Average intersection delay (s)	=	10.0
Largest average movement delay (s)	=	53.9
Largest back of queue, 95% (ft)	=	260
Performance Index	=	29.03
Degree of saturation (highest)	=	0.706
Practical Spare Capacity (lowest)	=	13
Total vehicle capacity, all lanes (veh/h)	=	3737
Total vehicle flow (veh/h)	=	1596
Total person flow (pers/h)	=	1915
Total vehicle delay (veh-h/h)	=	4.42
Total person delay (pers-h/h)	=	5.31

Total effective vehicle stops (veh/h)	=	411
Total effective person stops (pers/h)	=	493
Total vehicle travel (veh-mi/h)	=	664.7
Total cost ($/h)	=	269.63
Total fuel (ga/h)	=	31.9
Total CO2 (kg/h)	=	302.82

Sea View II
Intersecci?n PR-925 & PR-3; Hora Pico PM, 2011 Sin Proyecto
Intersection ID: 1
Stop Sign Controlled Intersection
Flow Scale = 103%

Table S.6 - INTERSECTION PERFORMANCE

Total Flow (veh/h)	Deg. Satn x	Total Delay (veh-h/h)	Total Delay (pers-h/h)	Aver. Delay (sec)	Prop. Queued	Eff. Stop Rate	Longest Queue (ft)	Perf. Index	Aver. Speed (mph)
INTERSECTION (persons):									
1915	0.706		5.31	10.0	0.582	0.26		29.03	49.6

Queue values in this table are 95% back of queue (feet).

Sea View II
Intersecci?n PR-925 & PR-3; Hora Pico PM, 2011 Sin Proyecto
Intersection ID: 1
Stop Sign Controlled Intersection
Flow Scale = 103%

Table S.7 - LANE PERFORMANCE

Lane No.	Mov No.	Dem Flow (veh /h)	Cap (veh /h)	Deg. Satn x	Aver. Delay (sec)	Eff. Stop Rate	Queue 95% Back (vehs)	Queue 95% Back (ft)	Short Lane (ft)
West: PR-3 Oeste									
1 LT	12	840	1613	0.521	8.3	0.20	10.1	260	
East: PR-3 Este									
1 TR	22, 23	603	1908	0.316	1.1	0.08	0.0	0	
North: PR-925 Norte									
1 LR	42, 43	153	216	0.707	53.9	1.28	6.9	185	

Sea View II
Intersecci?n PR-925 & PR-3; Hora Pico PM, 2011 Sin Proyecto
Intersection ID: 1
Stop Sign Controlled Intersection
Flow Scale = 103%

Table S.10 - MOVEMENT CAPACITY AND PERFORMANCE SUMMARY

Mov No.	Mov Typ	Dem Flow (veh /h)	Total Cap. (veh /h)	Lane Util (%)	Deg. Satn x	Aver. Delay (sec)	Eff. Stop Rate	95% Back of Queue (veh)	Perf. Index
West: PR-3 Oeste									
12	LT	840	1613	100	0.521	8.3	0.20	10.1	15.06
East: PR-3 Este									
22	T	536	1696	100	0.316	0.0	0.00	0.0	5.59
23	R	67	212	100	0.316	9.9	0.72	0.0	1.14
North: PR-925 Norte									
42	L	60	85	100	0.706*	53.9	1.24	6.9	2.82
43	R	93	132	100	0.705	53.9	1.31	6.9	4.41

* Maximum degree of saturation

Sea View II
Intersecci?n PR-925 & PR-3; Hora Pico PM, 2011 Sin Proyecto
Intersection ID: 1
Stop Sign Controlled Intersection
Flow Scale = 103%

Table S.14 - SUMMARY OF INPUT AND OUTPUT DATA

Lane No.	Demand Flow (veh/h) L	T	R	Tot	%HV	Adj. Basic Satf.	Eff Grn (secs) 1st	2nd	Deg Sat x	Aver. Delay (sec)	Longest Queue (ft)	Shrt Lane (ft)
West: PR-3 Oeste												
1 LT	148	692		840	3				0.521	8.3	260	
	148	692	0	840	3				0.521	8.3	260	
East: PR-3 Este												
1 TR		536	67	603	3				0.316	1.1	0	
	0	536	67	603	3				0.316	1.1		
North: PR-925 Norte												
1 LR	60		93	153	10				0.707	53.9	185	
	60	0	93	153	10				0.707	53.9	185	

ALL VEHICLES	Total Flow	% HV	Max X	Aver. Delay	Max Queue
	1596	4	0.706	10.0	260

Total flow period = 60 minutes. Peak flow period = 15 minutes.

Queue values in this table are 95% back of queue (feet).

Note: Basic Saturation Flows are not adjusted at roundabouts or sign-controlled intersections and apply only to continuous lanes.

Sea View II
Intersecci?n PR-925 & PR-3; Hora Pico PM, 2011 Sin Proyecto
Intersection ID: 1
Stop Sign Controlled Intersection
Flow Scale = 103%

Table S.15 - CAPACITY AND LEVEL OF SERVICE

Mov No.	Mov Typ	Total Flow (veh /h)	Total Cap. (veh /h)	Deg. of Satn (v/c)	Aver. Delay (sec)	LOS
West: PR-3 Oeste						
12	LT	840	1613	0.521	8.3	A
		840	1613	0.521	8.3	A
East: PR-3 Este						
22	T	536	1696	0.316	0.0	A
23	R	67	212	0.316	9.9	A
		603	1908	0.316	1.1	A
North: PR-925 Norte						
42	L	60	85	0.706*	53.9	F
43	R	93	132	0.705	53.9	F
		153	217	0.706	53.9	F
ALL VEHICLES:		1596	3737	0.706	10.0	A

Level of Service calculations are based on
average control delay including geometric delay (HCM criteria),
independent of the current delay definition used.
For the criteria, refer to the "Level of Service" topic in the
aaSIDRA Output Guide or the Output section of the on-line help.
* Maximum v/c ratio, or critical green periods

--- End of aaSIDRA Output ---

Akcelik & Associates Pty Ltd - aaSIDRA 2.0.0.205

Servicios Técnicos Integrados
Francisco J. Reyes Registered User No. 50310
Licence Type: Professional, Single Computer

Time and Date of Analysis 2:47 PM, May 4,2009

Filename: F:\My Documents\Francisco\Consultores\April\Humacao\Sea View II\Sidra\925-3-53-11AMS.OUT

Sea View II
Int. PR-3, PR-925 & Rampa PR-53; Hora Pico AM, 2011 Sin Proyecto
Intersection ID: 5

aaTraffic SIDRA US Highway Capacity Manual (2000) Version

RUN INFORMATION

Parameter sensitivity run: "Optimum" Maximum Green = 50.0 s

* Basic Parameters:
  Intersection Type: Signalised - Actuated Isolated
  For fully-actuated signal timings, the following specifications will be ignored:
    Any maximum cycle time specification
    Any user-given cycle time (unless phase times also given)
    User-given cycle and phase times (if variable flow scale run)
    Any variable cycle time specification
    Any green split priority specification
  Driving on the right-hand side of the road
  Input data specified in US units
  Default Values File No. 11
  Peak flow period (for performance): 15 minutes
  Unit time (for volumes): 60 minutes (Total Flow Period)
  Delay definition: Control delay
                Geometric delay included
  HCM Delay and Queue Models option selected
  Level of Service based on: Delay (HCM method)
  Queue definition: Back of queue, 95th Percentile

* No. of Main (Timing-Capacity) Iterations = 3
  Comparison of last two iterations:
    Difference in intersection degree of satn = 0.0 %
    Difference in total vehicle capacity = 0.0 %
    Largest difference in eff. green times = 0 secs
    (max. value for stopping = 1 secs)

* Movement 12 has large x because of short lanes.
  The degree of saturation of adjacent movement 11 is less than xp, hence this solution may be satisfactory.
  See Table S.7 for queue length, delay etc.

Sea View II
Int. PR-3, PR-925 & Rampa PR-53; Hora Pico AM, 2011 Sin Proyecto
Intersection ID: 5
Actuated Isolated Signals, Cycle Time = 95
Flow Scale = 103%

Table S.3 - INTERSECTION PARAMETERS

Critical Movements: 12, 21, 43(1st), 31

L= 61 Y= 0.142 U= 0.250 T= 84.8

Cycle Time:

Minimum	Maximum	Practical	Chosen
54	NA	82	95

Intersection Level of Service	=	E
Worst movement Level of Service	=	F
Average intersection delay (s)	=	56.7
Largest average movement delay (s)	=	137.5
Largest back of queue, 95% (ft)	=	779
Performance Index	=	293.72
Degree of saturation (highest)	=	1.050
Practical Spare Capacity (lowest)	=	-14 %
Total vehicle capacity, all lanes (veh/h)	=	8644
Total vehicle flow (veh/h)	=	4810
Total person flow (pers/h)	=	5772
Total vehicle delay (veh-h/h)	=	75.71
Total person delay (pers-h/h)	=	90.85
Total effective vehicle stops (veh/h)	=	4484
Total effective person stops (pers/h)	=	5381
Total vehicle travel (veh-mi/h)	=	2096.4
Total cost ($/h)	=	1428.01
Total fuel (ga/h)	=	142.5
Total CO2 (kg/h)	=	1349.96

Sea View II
Int. PR-3, PR-925 & Rampa PR-53; Hora Pico AM, 2011 Sin Proyecto
Intersection ID: 5
Actuated Isolated Signals, Cycle Time = 95
Flow Scale = 103%

Table S.4 - PHASE INFORMATION

Phase Change Times: 0, 24, 53, 67
Phase Green Times: 20, 25, 10, 24

Current Phase Sequence No.: 1
Input phase sequence: A B C D
Output phase sequence: A B C D

Sea View II
Int. PR-3, PR-925 & Rampa PR-53; Hora Pico AM, 2011 Sin Proyecto
Intersection ID: 5
Actuated Isolated Signals, Cycle Time = 95

Flow Scale = 103%

Table S.6 - INTERSECTION PERFORMANCE

Total Flow (veh/h)	Deg. Satn x	Total Delay (veh-h/h)	Total Delay (pers-h/h)	Aver. Delay (sec)	Prop. Queued	Eff. Stop Rate	Longest Queue (ft)	Perf. Index	Aver. Speed (mph)
INTERSECTION (persons):									
5772	1.050		90.85	56.7	0.885	0.93		293.72	27.0

Queue values in this table are 95% back of queue (feet).

Sea View II
Int. PR-3, PR-925 & Rampa PR-53; Hora Pico AM, 2011 Sin Proyecto
Intersection ID: 5
Actuated Isolated Signals, Cycle Time = 95
Flow Scale = 103%

Table S.7 - LANE PERFORMANCE

Lane No.	Mov No.	Effective Green Times (sec) R1	G1	R2	G2	Dem Flow (veh /h)	Cap (veh /h)	Deg. Satn x	Aver. Delay (sec)	Eff. Stop Rate	Queue 95% Back (vehs)	(ft)	Shrt Lane (ft)
West: PR-3 Oeste													
1 L	12	75	20	0	0	240	240	1.000	49.4r	0.82	12.1*	308<	160
2 LT	11	70	25	0	0	429	508	0.844	50.1	0.88	24.6	633	
3 T	11	70	25	0	0	429	508	0.844	50.1	0.91	24.6	633	
4 TR	11, 13	40	25	27	3	431	510	0.844	51.5	0.96	23.3	592	
South: Ramp PR-53 Sur													
1 L	32	71	24	0	0	267	477	0.561	46.8	0.83	13.8	348	
2 LT	32, 31	71	24	0	0	269	479	0.561	45.5	0.82	13.9	350	
3 R	33	0	95	0	0	109	1678	0.065	9.2	0.65	2.8#		60
East: PR-3 Este													
1 L	22	75	20	0	0	362	387	0.934	82.3	1.02	23.8*	613	400
2 T	21	70	25	0	0	490	517	0.947	65.9	1.02	30.7	779	
3 T	21	70	25	0	0	490	517	0.947	65.9	1.02	30.7	779	
4 T	21	70	25	0	0	490	517	0.947	65.9	1.02	30.7	779	
5 R	23	0	95	0	0	249	1690	0.147	10.3	0.67	5.6#		400
North: PR-925 Norte													
1 LT	42, 41	85	10	0	0	211	201	1.049	131.8	1.06	18.0	458	
2 R	41, 43	4	10	38	43	345	413	0.835	37.0	0.94	14.7*	368	200

< Short lane capacity is reached and there is excess flow into an adjacent lane
Density (passenger cars per km or mile)

* Queue length exceeds short lane length due to specification of a percentile queue in the aaSIDRA Configuration File. For calculation of this statistic, you may specify the lane with full length.

r Delay, stops and queue length for this lane have been cut down to fit in the queuing space. The amount cut may not be accounted for fully in the adjacent lane performance statistics. You may wish to change the short lane to a full lane to investigate the extent of this effect.

Sea View II
Int. PR-3, PR-925 & Rampa PR-53; Hora Pico AM, 2011 Sin Proyecto
Intersection ID: 5
Actuated Isolated Signals, Cycle Time = 95
Flow Scale = 103%

Table S.10 - MOVEMENT CAPACITY AND PERFORMANCE SUMMARY

Mov No.	Mov Typ	Dem Flow (veh /h)	Total Cap. (veh /h)	Lane Util (%)	Deg. Satn x	Eff. Grn 1st Grn	Eff. Grn 2nd Grn	Aver. Delay (sec)	Eff. Stop Rate	95% Back of Queue (veh)	Perf. Index
West: PR-3 Oeste											
12 L		240	240<	100	1.000	20*		49.4	0.82	12.1	13.02
11 LT		1105E	1309	100	0.844	25		49.4	0.92	24.6	66.71
13 R	(Un2)	184E	218	100	0.844	25	39	57.5	0.96	23.3	11.24
South: Ramp PR-53 Sur											
32 L		498	887	100	0.561	24		46.8	0.83	13.9	27.12
31 T		38	68	100	0.561	24*		36.6	0.76	13.9	1.95
33 R	(Con)	109	1678	100	0.065	95		9.2	0.65	2.8 #	1.80
East: PR-3 Este											
22 L		362	388	100	0.934	20		82.3	1.02	23.8	27.17
21 T		1469	1552	100	0.947	25*		65.9	1.02	30.7	103.09
23 R	(Con)	249	1690	100	0.147	95		10.3	0.67	5.6 #	4.05
North: PR-925 Norte											
42 L		95	91	100	1.049	10		137.5	1.06	18.0	9.48
41 T		116	111	80	1.050*	10		127.2	1.06	18.0	11.25
43 R	(Un2)	345	413<	80	0.835	10*	43	37.0	0.94	14.7	16.84

E "Excess" flow from the short lane of an adjacent movement added to normal flow
< Reduced capacity due to a short lane effect
* Maximum degree of saturation, or critical green periods
\# Largest density (passenger cars per km or mile) for any lane

---

Sea View II
Int. PR-3, PR-925 & Rampa PR-53; Hora Pico AM, 2011 Sin Proyecto
Intersection ID: 5
Actuated Isolated Signals, Cycle Time = 95
Flow Scale = 103%

Table S.14 - SUMMARY OF INPUT AND OUTPUT DATA

Lane No.	Demand Flow (veh/h) L	T	R	Tot	%HV	Adj. Basic Satf.	Eff Grn (secs) 1st	2nd	Deg Sat x	Aver. Delay (sec)	Longest Queue (ft)	Shrt Lane (ft)
West: PR-3 Oeste												
1 L	240			240	2	2000	20		1.000	49.4r	308*	160
2 LT	240	418		429	4	2000	25		0.844	50.1	633	
3 T		429		429	4	2000	25		0.844	50.1	633	
4 TR		247	184	431	2	2000	25	3	0.844	51.5	592	
	251	1094	184	1529	3				1.000	50.4	633	
South: Ramp PR-53 Sur												
1 L	267			267	1	2000	24		0.561	46.8	348	
2 LT	231	38		269	1	2000	24		0.561	45.5	350	
3 R			109	109	2	2000	95		0.065	9.2		60
	498	38	109	645	1				0.561	39.9	350	250d
East: PR-3 Este												
1 L	362			362	4	2000	20		0.934	82.3	613*	400
2 T		490		490	2	2000	25		0.947	65.9	779	
3 T		490		490	2	2000	25		0.947	65.9	779	
4 T		490		490	2	2000	25		0.947	65.9	779	
5 R			249	249	1	2000	95		0.147	10.3		400
	362	1469	249	2080	2				0.947	62.1	779	
North: PR-925 Norte												
1 LT	95	116		211	2	2000	10		1.049	131.8	458	
2 R			345	345	1	2000	10	43	0.835	37.0	368*	200
	95	116	345	556	1				1.049	73.0	458	250d

ALL VEHICLES	Total Flow	% HV	Cycle Time	Max X	Aver. Delay	Max Queue
	4810	2	95	1.050	56.7	779

Total flow period = 60 minutes. Peak flow period = 15 minutes.

Queue values in this table are 95% back of queue (feet).

Note: Basic Saturation Flows (in through car units) have been adjusted for grade, lane widths, parking manoeuvres and bus stops.

* Queue length exceeds short lane length due to specification of a percentile queue in the aaSIDRA Configuration File. For calculation of this statistic, you may specify the lane with full length.

d Short lane length on departure side.

r Delay, stops and queue length for this lane have been cut down to fit in the queuing space. The amount cut may not be accounted for fully in the adjacent lane performance statistics. You may wish to change the short lane to a full lane to investigate the extent of this effect.

Sea View II
Int. PR-3, PR-925 & Rampa PR-53; Hora Pico AM, 2011 Sin Proyecto
Intersection ID: 5
Actuated Isolated Signals, Cycle Time = 95
Flow Scale = 103%

Table S.15 - CAPACITY AND LEVEL OF SERVICE

Mov No.	Mov Typ	Green Ratio 1st grn	Time (g/C) 2nd grn	Total Flow (veh /h)	Total Cap. (veh /h)	Deg. of Satn (v/c)	Aver. Delay (sec)	LOS
West: PR-3 Oeste								
12	L	0.211*		240	240<	1.000	49.4	D
11	LT	0.263		1105E	1309	0.844	49.4	D
13	R (Un2)	0.263	0.411	184E	218	0.844	57.5	E
				1529	1767	1.000	50.4	D
South: Ramp PR-53 Sur								
32	L	0.253		498	887	0.561	46.8	D
31	T	0.253*		38	68	0.561	36.6	D
33	R (Con)	1.000		109	1678	0.065	9.2	A#
				645	2633	0.561	39.8	D
East: PR-3 Este								
22	L	0.211		362	388	0.934	82.3	F
21	T	0.263*		1469	1552	0.947	65.9	E
23	R (Con)	1.000		249	1690	0.147	10.3	A#
				2080	3629	0.947	62.1	E
North: PR-925 Norte								
42	L	0.105		95	91	1.049	137.5	F
41	T	0.105		116	111	1.050*	127.2	F
43	R (Un2)	0.105*	0.453	345	413<	0.835	37.0	D
				556	614	1.050	73.0	E
ALL VEHICLES:				4810	8644	1.050	56.7	E
INTERSECTION (persons):				5772	8644	1.050	56.7	

Level of Service calculations are based on
average control delay including geometric delay (HCM criteria),
independent of the current delay definition used.
For the criteria, refer to the "Level of Service" topic in the
aaSIDRA Output Guide or the Output section of the on-line help.

Level Of Service for continuous movements based on density
< Reduced capacity due to a short lane effect
* Maximum v/c ratio, or critical green periods
E "Excess" flow from the short lane of an adjacent movement added to normal flow

Sea View II
Int. PR-3, PR-925 & Rampa PR-53; Hora Pico AM, 2011 Sin Proyecto
Intersection ID: 5

Table S.23 - SENSITIVITY ANALYSIS RESULTS

Performance Measure	Smallest Value	Param Scale
Degree of Satn	1.050	50
Average Delay	56.7	50
Stop Rate	0.89	110
Max. Queue for Any Movement	30.7	50
Perf. Index	293.7	50
Cost total	1428.0	50

Performance Measure	Largest Value	Param Scale
Total Vehicle Cap.	9205	80
Prac. Spare Cap.	-14	50

Sea View II
Int. PR-3, PR-925 & Rampa PR-53; Hora Pico AM, 2011 Sin Proyecto
Intersection ID: 5
Actuated Isolated Signals, Cycle Time = 95
Flow Scale = 103%

Table D.5 - PROGRESSION FACTORS & ACTUATED SIGNAL PARAMETERS

Mov No.	Control	Coord.	Arrival Type	Delay Prog. Factor	Queue Prog. Factor	Gap Settings es	Gap Settings eh	Disp. Grn. Settings 1st Grn Gmin	1st Grn Gmax	2nd Grn Gmin	2nd Grn Gmax
West: PR-3 Oeste											
12	VA	No	3	1.000	1.000	2.0	2.5	20	10		
11	VA	No	3	1.000	1.000	2.5	3.0	6	25		
13	VA	No	3	1.000	1.000	2.5	3.0	6	25	6	25
South: Ramp PR-53 Sur											
32	VA	No	3	1.000	1.000	2.0	2.5	6	10		
31	VA	No	3	1.000	1.000	2.5	3.0	6	25		
33	VA	No	3	1.000	1.000	2.5	3.1	6	25		
East: PR-3 Este											
22	VA	No	3	1.000	1.000	2.0	2.5	20	10		
21	VA	No	3	1.000	1.000	2.5	3.0	6	25		
23	VA	No	3	1.000	1.000	2.5	3.0	6	25		
North: PR-925 Norte											

42	VA	No	3	1.000	1.000	2.0	2.5	6	10		
41	VA	No	3	1.000	1.000	2.5	3.0	6	10		
43	VA	No	3	1.000	1.000	2.5	3.1	6	10	6	25

Sea View II
Int. PR-3, PR-925 & Rampa PR-53; Hora Pico AM, 2011 Sin Proyecto
Intersection ID: 5

Scaled sensitivity parameter: Maximum Green

Table V.23 - INTERSECTION SUMMARY FOR VARIABLE PARAMETER SCALE

Param Scale (%)	Cycle Time (sec)	Total Veh. Cap.	Intersn Deg. of Satn	Prac. Spare Cap.	Aver. Delay (sec)	Stop Rate	Longest Queue (veh)	Perf. Index	Cost Total $/h
50	95	8644	1.050	-14	56.7	0.93	30.7	293.7	1428.0
55	100	8791	1.963	-54	89.5	0.97	60.9	362.9	1830.8
60	104	8863	1.888	-52	87.0	0.96	60.7	361.9	1797.6
65	109	8982	1.852	-51	85.4	0.94	61.6	362.1	1773.1
70	113	9038	1.800	-50	84.1	0.93	61.7	363.3	1755.1
75	118	9143	1.771	-49	83.2	0.92	62.5	365.3	1742.2
80	121	9205	1.716	-48	81.3	0.91	62.1	363.8	1716.6
85	124	9205	1.663	-46	80.2	0.90	61.5	365.3	1702.9
90	125	9175	1.584	-43	77.7	0.90	59.5	362.4	1671.4
95	128	9174	1.546	-42	77.3	0.90	59.2	365.0	1665.8
100	130	9188	1.497	-40	75.8	0.90	58.2	363.9	1646.5
105	133	9179	1.460	-38	75.0	0.89	57.6	365.3	1636.0
110	137	9154	1.443	-38	75.4	0.89	58.0	370.5	1642.0
115	140	9089	1.415	-36	75.9	0.89	57.7	375.3	1647.3
120	144	9067	1.401	-36	76.6	0.89	58.2	380.8	1656.3

--- End of aaSIDRA Output ---

Akcelik & Associates Pty Ltd - aaSIDRA 2.0.0.205

Servicios Técnicos Integrados
Francisco J. Reyes Registered User No. 50310
Licence Type: Professional, Single Computer

Time and Date of Analysis 3:14 AM, May 4,2009

Filename: F:\My Documents\Francisco\Consultores\April\Humacao\Sea View II\Sidra\925-3-53-11PMS.OUT

Sea View II
Int. PR-3, PR-925 & Rampa PR-53; Hora Pico PM, 2011 Sin Proyecto
Intersection ID: 5

aaTraffic SIDRA US Highway Capacity Manual (2000) Version

RUN INFORMATION

Parameter sensitivity run: "Optimum" Maximum Green = 85.0 %

* Basic Parameters:
  Intersection Type: Signalised - Actuated Isolated
  For fully-actuated signal timings, the following specifications will be ignored:
    Any maximum cycle time specification
    Any user-given cycle time (unless phase times also given)
    User-given cycle and phase times (if variable flow scale run)
    Any variable cycle time specification
    Any green split priority specification
  Driving on the right-hand side of the road
  Input data specified in US units
  Default Values File No. 11
  Peak flow period (for performance): 15 minutes
  Unit time (for volumes): 60 minutes (Total Flow Period)
  Delay definition: Control delay
                Geometric delay included
  HCM Delay and Queue Models option selected
  Level of Service based on: Delay (HCM method)
  Queue definition: Back of queue, 95th Percentile

* No. of Main (Timing-Capacity) Iterations = 2
  Comparison of last two iterations:
    Difference in intersection degree of satn = 0.0 %
    Difference in total vehicle capacity = 0.0 %
    Largest difference in eff. green times = 0 secs
    (max. value for stopping = 0 secs)

Sea View II
Int. PR-3, PR-925 & Rampa PR-53; Hora Pico PM, 2011 Sin Proyecto
Intersection ID: 5
Actuated Isolated Signals, Cycle Time = 113
Flow Scale = 103%

Table S.3 - INTERSECTION PARAMETERS

Critical Movements: 12, 13(1st), 43(1st), 32

L= 110 Y= 0.000 U= 0.000 T= 110.0

Cycle Time:

Minimum	Maximum	Practical	Chosen
54	NA	111	113

Intersection Level of Service	=	D
Worst movement Level of Service	=	F
Average intersection delay (s)	=	52.2
Largest average movement delay (s)	=	92.0
Largest back of queue, 95% (ft)	=	1271
Performance Index	=	321.62
Degree of saturation (highest)	=	1.000
Practical Spare Capacity (lowest)	=	-10 %
Total vehicle capacity, all lanes (veh/h)	=	9595
Total vehicle flow (veh/h)	=	5097
Total person flow (pers/h)	=	6116
Total vehicle delay (veh-h/h)	=	73.89
Total person delay (pers-h/h)	=	88.67
Total effective vehicle stops (veh/h)	=	4614
Total effective person stops (pers/h)	=	5537
Total vehicle travel (veh-mi/h)	=	2223.4
Total cost ($/h)	=	1453.54
Total fuel (ga/h)	=	147.0
Total CO2 (kg/h)	=	1392.12

Sea View II
Int. PR-3, PR-925 & Rampa PR-53; Hora Pico PM, 2011 Sin Proyecto
Intersection ID: 5
Actuated Isolated Signals, Cycle Time = 113
Flow Scale = 103%

Table S.4 - PHASE INFORMATION

Phase Change Times: 0, 24, 71, 92
Phase Green Times: 20, 43, 17, 17

Current Phase Sequence No.: 1
Input phase sequence: A B C D
Output phase sequence: A B C D

Sea View II
Int. PR-3, PR-925 & Rampa PR-53; Hora Pico PM, 2011 Sin Proyecto
Intersection ID: 5
Actuated Isolated Signals, Cycle Time = 113
Flow Scale = 103%

Table S.6 - INTERSECTION PERFORMANCE

Total	Deg.	Total	Total	Aver.	Prop.	Eff.	Longest	Perf.	Aver.

Flow (veh/h)	Satn x	Delay (veh-h/h)	Delay (pers-h/h)	Delay (sec)	Queued	Stop Rate	Queue (ft)	Index	Speed (mph)
INTERSECTION (persons):									
6116	1.000		88.67	52.2	0.868	0.91		321.62	28.3

Queue values in this table are 95% back of queue (feet).

Sea View II
Int. PR-3, PR-925 & Rampa PR-53; Hora Pico PM, 2011 Sin Proyecto
Intersection ID: 5
Actuated Isolated Signals, Cycle Time = 113
Flow Scale = 103%

Table S.7 - LANE PERFORMANCE

Lane No.	Mov No.	Effective Green Times (sec) R1	G1	R2	G2	Dem Flow (veh /h)	Cap (veh /h)	Deg. Satn x	Aver. Delay (sec)	Eff. Stop Rate	Queue 95% Back (vehs)	(ft)	Shrt Lane (ft)
West: PR-3 Oeste													
1 L	12	93	20	0	0	187	187	1.000	59.8r	0.81	11.5*	309<	160
2 LT	11	70	43	0	0	738	754	0.978	66.1	1.01	50.5	1289	
3 T	11	70	43	0	0	738	754	0.978	66.1	1.08	50.5	1271	
4 TR	11, 13	60	43	4	6	726	742	0.978	65.3	1.07	47.2	1196	
South: Ramp PR-53 Sur													
1 L	32	96	17	0	0	164	281	0.583	64.4	0.81	11.2	285	
2 LT	32, 31	4	1	91	17	167	287	0.583	59.2	0.80	11.0	282	
3 R	33	0	113	0	0	85	1633	0.052	9.3	0.65	2.2#		60
East: PR-3 Este													
1 L	22	93	20	0	0	300	327	0.916	92.0	0.95	22.9*	586	400
2 T	21	70	43	0	0	466	752	0.619	33.2	0.75	24.5	617	
3 T	21	70	43	0	0	466	752	0.619	33.2	0.75	24.5	617	
4 T	21	70	43	0	0	466	752	0.619	33.2	0.75	24.5	617	
5 R	23	0	113	0	0	218	1695	0.129	10.3	0.67	4.9#		400
North: PR-925 Norte													
1 LT	42, 41	96	17	0	0	125	288	0.434	55.2	0.76	8.3	212	
2 R	41, 43	4	17	34	58	252	391	0.645	22.4	0.80	9.1*	227	200

< Short lane capacity is reached and there is excess flow into an adjacent lane
Density (passenger cars per km or mile)
* Queue length exceeds short lane length due to specification of a percentile queue in the aaSIDRA Configuration File. For calculation of this statistic, you may specify the lane with full length.
r Delay, stops and queue length for this lane have been cut down to fit in the queuing space. The amount cut may not be accounted for fully in the

adjacent lane performance statistics. You may wish to change the short lane to a full lane to investigate the extent of this effect.

Sea View II
Int. PR-3, PR-925 & Rampa PR-53; Hora Pico PM, 2011 Sin Proyecto
Intersection ID: 5
Actuated Isolated Signals, Cycle Time = 113
Flow Scale = 103%

Table S.10 - MOVEMENT CAPACITY AND PERFORMANCE SUMMARY

Mov No.	Mov Typ	Dem Flow (veh /h)	Total Cap. (veh /h)	Lane Util (%)	Deg. Satn x	Eff. Grn 1st Grn	Eff. Grn 2nd Grn	Aver. Delay (sec)	Eff. Stop Rate	95% Back of Queue (veh)	Perf. Index
West: PR-3 Oeste											
12	L	187	187<	100	1.000*	20*		59.8	0.81	11.5	11.73
11	LT	1734E	1772	100	0.978	43		64.9	1.08	50.5	131.80
13	R	468E	478	100	0.978	43*	62	69.1	1.07	47.2	35.03
South: Ramp PR-53 Sur											
32	L	305	523	100	0.583	17*		62.5	0.81	11.2	20.21
31	T	26	45	100	0.581	88	17	50.4	0.78	11.0	1.62
33	R (Con)	85	1633	100	0.052	113		9.3	0.65	2.2 #	1.41
East: PR-3 Este											
22	L	300	327	100	0.916	20		92.0	0.95	22.9	24.90
21	T	1397	2257	100	0.619	43		33.2	0.75	24.5	73.48
23	R (Con)	218	1695	100	0.129	113		10.3	0.67	4.9 #	3.54
North: PR-925 Norte											
42	L	52	120	67	0.434	17		61.0	0.79	8.3	3.36
41	T	73	168	67	0.434	17		50.8	0.74	8.3	4.50
43	R (Un2)	252	391<	100	0.645	17*	58	22.4	0.80	9.1	10.02

E "Excess" flow from the short lane of an adjacent movement added to normal flow
< Reduced capacity due to a short lane effect
* Maximum degree of saturation, or critical green periods
# Largest density (passenger cars per km or mile) for any lane

---

Sea View II
Int. PR-3, PR-925 & Rampa PR-53; Hora Pico PM, 2011 Sin Proyecto
Intersection ID: 5
Actuated Isolated Signals, Cycle Time = 113
Flow Scale = 103%

Table S.14 - SUMMARY OF INPUT AND OUTPUT DATA

Lane No.	Demand Flow (veh/h) L	T	R	Tot	%HV	Adj. Basic Satf.	Eff Grn (secs) 1st	2nd	Deg Sat x	Aver. Delay (sec)	Longest Queue (ft)	Shrt Lane (ft)
West: PR-3 Oeste												

1	L	187			187	9	2000	20		1.000	59.8r	309*	160
2	LT	187	579		738	3	2000	43		0.978	66.1	1289	
3	T		738		738	1	2000	43		0.978	66.1	1271	
4	TR		258	468	726	2	2000	43	6	0.978	65.3	1196	
		346	1575	468	2389	2				1.000	65.4	1289	
South:		Ramp PR-53 Sur											
1	L	164			164	2	2000	17		0.583	64.4	285	
2	LT	141	26		167	3	2000	1	17	0.583	59.2	282	
3	R			85	85	6	2000	113		0.052	9.3		60
		305	26	85	416	3				0.583	51.0	285	250d
East:		PR-3 Este											
1	L	300			300	3	2000	20		0.916	92.0	586*	400
2	T		466		466	1	2000	43		0.619	33.2	617	
3	T		466		466	1	2000	43		0.619	33.2	617	
4	T		466		466	1	2000	43		0.619	33.2	617	
5	R			218	218	0	2000	113		0.129	10.3		400
		300	1397	218	1915	1				0.916	39.8	617	
North:		PR-925 Norte											
1	LT	52	73		125	2	2000	17		0.434	55.2	212	
2	R			252	252	0	2000	17	58	0.645	22.4	227*	200
		52	73	252	377	1				0.645	33.2	227	250d

ALL VEHICLES	Total Flow	% HV	Cycle Time	Max X	Aver. Delay	Max Queue
	5097	2	113	1.000	52.2	1271

Total flow period = 60 minutes. Peak flow period = 15 minutes.

Queue values in this table are 95% back of queue (feet).

Note: Basic Saturation Flows (in through car units) have been adjusted for grade, lane widths, parking manoeuvres and bus stops.

* Queue length exceeds short lane length due to specification of a percentile queue in the aaSIDRA Configuration File. For calculation of this statistic, you may specify the lane with full length.

d Short lane length on departure side.

r Delay, stops and queue length for this lane have been cut down to fit in the queuing space. The amount cut may not be accounted for fully in the adjacent lane performance statistics. You may wish to change the short lane to a full lane to investigate the extent of this effect.

Sea View II
Int. PR-3, PR-925 & Rampa PR-53; Hora Pico PM, 2011 Sin Proyecto
Intersection ID: 5
Actuated Isolated Signals, Cycle Time = 113
Flow Scale = 103%

Table S.15 - CAPACITY AND LEVEL OF SERVICE

Mov No.	Mov Typ	Green Ratio (g/C) 1st grn	Green Ratio (g/C) 2nd grn	Total Flow (veh /h)	Total Cap. (veh /h)	Deg. of Satn (v/c)	Aver. Delay (sec)	LOS
West: PR-3 Oeste								
12	L	0.177*		187	187<	1.000*	59.8	E
11	LT	0.381		1734E	1772	0.978	64.9	E
13	R	0.381*	0.549	468E	478	0.978	69.1	E
				2389	2438	1.000	65.4	E
South: Ramp PR-53 Sur								
32	L	0.150*		305	523	0.583	62.5	E
31	T	0.779	0.150	26	45	0.581	50.4	D
33	R (Con)	1.000		85	1633	0.052	9.3	A#
				416	2201	0.583	50.9	D
East: PR-3 Este								
22	L	0.177		300	327	0.916	92.0	F
21	T	0.381		1397	2257	0.619	33.2	C
23	R (Con)	1.000		218	1695	0.129	10.3	A#
				1915	4280	0.916	39.8	D
North: PR-925 Norte								
42	L	0.150		52	120	0.434	61.0	E
41	T	0.150		73	168	0.434	50.8	D
43	R (Un2)	0.150*	0.513	252	391<	0.645	22.4	C
				377	679	0.645	33.2	C
ALL VEHICLES:				5097	9595	1.000	52.2	D
INTERSECTION (persons):				6116	9595	1.000	52.2	

Level of Service calculations are based on
average control delay including geometric delay (HCM criteria),
independent of the current delay definition used.
For the criteria, refer to the "Level of Service" topic in the
aaSIDRA Output Guide or the Output section of the on-line help.

- # Level Of Service for continuous movements based on density
- < Reduced capacity due to a short lane effect
- * Maximum v/c ratio, or critical green periods
- E "Excess" flow from the short lane of an adjacent movement added to normal flow

Table S.23 - SENSITIVITY ANALYSIS RESULTS

Performance Measure	Smallest Value	Param Scale
Degree of Satn	1.000	85
Average Delay	52.2	85
Stop Rate	0.86	120
Max. Queue for Any Movement	48.2	65
Perf. Index	314.4	65
Cost total	1453.5	85

Performance Measure	Largest Value	Param Scale
Total Vehicle Cap.	9813	115
Prac. Spare Cap.	-10	85

Sea View II
Int. PR-3, PR-925 & Rampa PR-53; Hora Pico PM, 2011 Sin Proyecto
Intersection ID: 5
Actuated Isolated Signals, Cycle Time = 113
Flow Scale = 103%

Table D.5 - PROGRESSION FACTORS & ACTUATED SIGNAL PARAMETERS

Mov No.	Control	Coord.	Arrival Type	Delay Prog. Factor	Queue Prog. Factor	Gap Settings es	Gap Settings eh	Disp. Grn. Settings 1st Grn Gmin	1st Grn Gmax	2nd Grn Gmin	2nd Grn Gmax
West: PR-3 Oeste											
12	VA	No	3	1.000	1.000	2.0	2.5	20	17		
11	VA	No	3	1.000	1.000	2.5	3.0	6	43		
13	VA	No	3	1.000	1.000	2.5	3.0	6	43	6	43
South: Ramp PR-53 Sur											
32	VA	No	3	1.000	1.000	2.0	2.5	6	17		
31	VA	No	3	1.000	1.000	2.5	3.0	6	43	6	43
33	VA	No	3	1.000	1.000	2.5	3.1	6	43		
East: PR-3 Este											
22	VA	No	3	1.000	1.000	2.0	2.5	20	17		
21	VA	No	3	1.000	1.000	2.5	3.0	6	43		
23	VA	No	3	1.000	1.000	2.5	3.0	6	43		
North: PR-925 Norte											
42	VA	No	3	1.000	1.000	2.0	2.5	6	17		
41	VA	No	3	1.000	1.000	2.5	3.0	6	17		
43	VA	No	3	1.000	1.000	2.5	3.1	6	17	6	43

Sea View II
Int. PR-3, PR-925 & Rampa PR-53; Hora Pico PM, 2011 Sin Proyecto
Intersection ID: 5

Scaled sensitivity parameter: Maximum Green

Table V.23 - INTERSECTION SUMMARY FOR VARIABLE PARAMETER SCALE

Param Scale (%)	Cycle Time (sec)	Total Veh. Cap.	Intersn Deg. of Satn	Prac. Spare Cap.	Aver. Delay (sec)	Stop Rate	Longest Queue (veh)	Perf. Index	Cost Total $/h
50	81	8938	1.140	-21	67.5	1.07	49.7	332.4	1686.9
55	86	9095	1.094	-18	60.9	1.02	48.3	320.0	1590.0
60	90	9167	1.078	-16	59.3	1.00	48.7	319.7	1566.0
65	95	9291	1.045	-14	55.5	0.97	48.2	314.4	1509.9
70	99	9351	1.033	-13	55.0	0.96	49.0	316.9	1501.3
75	104	9458	1.007	-11	53.0	0.93	49.2	316.2	1470.0
80	108	9504	1.000	-10	53.5	0.93	50.2	321.0	1475.8
85	113	9595	1.000	-10	52.2	0.91	50.5	321.6	1453.5
90	117	9633	1.000	-10	52.9	0.90	51.5	327.0	1462.1
95	122	9712	1.000	-10	52.7	0.89	52.0	330.3	1456.8
100	126	9743	1.013	-11	53.6	0.88	53.1	336.1	1467.7
105	132	9780	1.000	-10	53.9	0.87	54.7	342.3	1471.3
110	137	9778	1.000	-10	55.2	0.87	56.7	350.4	1488.5
115	143	9813	1.000	-10	55.5	0.86	58.3	356.5	1492.1
120	148	9807	1.000	-10	56.8	0.86	60.2	364.8	1510.5

--- End of aaSIDRA Output ---

Akcelik & Associates Pty Ltd - aaSIDRA 2.0.0.205

Servicios Técnicos Integrados
Francisco J. Reyes Registered User No. 50310
Licence Type: Professional, Single Computer

Time and Date of Analysis 3:13 AM, May 4,2009

Filename: F:\My Documents\Francisco\Consultores\April\Humacao\Sea View II\Sidra\CC-3-11AMS.OUT

Sea View II
Intrseccion PR-3 & Ciudad Cristiana; Hora Pico AM, 2011 Sin Proyecto
Intersection ID: 2

aaTraffic SIDRA US Highway Capacity Manual (2000) Version

RUN INFORMATION

* Basic Parameters:
  Intersection Type: Unsignalised - Two-Way Stop Control
  Driving on the right-hand side of the road
  Input data specified in US units
  Default Values File No. 11
  Peak flow period (for performance): 15 minutes
  Unit time (for volumes): 60 minutes (Total Flow Period)
  Delay definition: Control delay
  Geometric delay included
  HCM Delay and Queue Models option selected
  Level of Service based on: Delay (HCM method)
  Queue definition: Back of queue, 95th Percentile

Sea View II
Intrseccion PR-3 & Ciudad Cristiana; Hora Pico AM, 2011 Sin Proyecto
Intersection ID: 2
Stop Sign Controlled Intersection
Flow Scale = 103%

Table S.3 - INTERSECTION PARAMETERS

Intersection Level of Service	=	C
Worst movement Level of Service	=	F
Average intersection delay (s)	=	22.5
Largest average movement delay (s)	=	159.8
Largest back of queue, 95% (ft)	=	410
Performance Index	=	48.25
Degree of saturation (highest)	=	1.000
Practical Spare Capacity (lowest)	=	-20 *
Total vehicle capacity, all lanes (veh/h)	=	5655
Total vehicle flow (veh/h)	=	1925
Total person flow (pers/h)	=	2310
Total vehicle delay (veh-h/h)	=	12.03
Total person delay (pers-h/h)	=	14.44

Total effective vehicle stops (veh/h)	=	372
Total effective person stops (pers/h)	=	446
Total vehicle travel (veh-mi/h)	=	802.4
Total cost ($/h)	=	379.93
Total fuel (ga/h)	=	39.4
Total CO2 (kg/h)	=	373.13

Sea View II
Intrseccion PR-3 & Ciudad Cristiana; Hora Pico AM, 2011 Sin Proyecto
Intersection ID: 2
Stop Sign Controlled Intersection
Flow Scale = 103%

Table S.6 - INTERSECTION PERFORMANCE

Total Flow (veh/h)	Deg. Satn x	Total Delay (veh-h/h)	Total Delay (pers-h/h)	Aver. Delay (sec)	Prop. Queued	Eff. Stop Rate	Longest Queue (ft)	Perf. Index	Aver. Speed (mph)
INTERSECTION (persons):									
2310	1.000		14.44	22.5	0.597	0.19		48.25	39.6

Queue values in this table are 95% back of queue (feet).

Sea View II
Intrseccion PR-3 & Ciudad Cristiana; Hora Pico AM, 2011 Sin Proyecto
Intersection ID: 2
Stop Sign Controlled Intersection
Flow Scale = 103%

Table S.7 - LANE PERFORMANCE

Lane No.	Mov No.	Dem Flow (veh /h)	Cap (veh /h)	Deg. Satn x	Aver. Delay (sec)	Eff. Stop Rate	Queue 95% Back (vehs)	Queue 95% Back (ft)	Short Lane (ft)
West: PR-3 Oeste									
1 T	12	722	1920	0.376	0.0	0.00	0.0	0	
2 R	13	54	1657	0.033	9.2	0.65	0.0	0	
South: Ciudad Cristiana Sur									
1 L	32	115	115	1.000	155.1	1.28	16.4	410	
2 LR	32, 33	109	109	1.000	159.8	1.39	12.7	318	
East: PR-3 Este									
1 LT	22	925	1854	0.499	8.2	0.04	11.6	295	

Sea View II
Intrseccion PR-3 & Ciudad Cristiana; Hora Pico AM, 2011 Sin Proyecto
Intersection ID: 2
Stop Sign Controlled Intersection

Flow Scale = 103%

Table S.10 - MOVEMENT CAPACITY AND PERFORMANCE SUMMARY

Mov No.	Mov Typ	Dem Flow (veh /h)	Total Cap. (veh /h)	Lane Util (%)	Deg. Satn x	Aver. Delay (sec)	Eff. Stop Rate	95% Back of Queue (veh)	Perf. Index
West: PR-3 Oeste									
12	T	722	1920	100	0.376	0.0	0.00	0.0	7.53
13	R	54	1657	100	0.033	9.2	0.65	0.0	0.89
South: Ciudad Cristiana Sur									
32	L	181	181	100	1.000*	156.8	1.31	16.4	19.50
33	R	43	43	100	1.000*	159.8	1.45	12.7	4.42
East: PR-3 Este									
22	LT	925	1854	100	0.499	8.2	0.04	11.6	15.91

* Maximum degree of saturation

Sea View II
Intrseccion PR-3 & Ciudad Cristiana; Hora Pico AM, 2011 Sin Proyecto
Intersection ID: 2
Stop Sign Controlled Intersection
Flow Scale = 103%

Table S.14 - SUMMARY OF INPUT AND OUTPUT DATA

Lane No.	Demand Flow (veh/h) L	T	R	Tot	%HV	Adj. Basic Satf.	Eff Grn (secs) 1st	2nd	Deg Sat x	Aver. Delay (sec)	Longest Queue (ft)	Shrt Lane (ft)
West: PR-3 Oeste												
1 T		722		722	4				0.376	0.0	0	
2 R			54	54	4				0.033	9.2	0	
	0	722	54	776	4				0.376	0.6		
South: Ciudad Cristiana Sur												
1 L	115			115	0				1.000	155.1	410	
2 LR	66		43	109	0				1.000	159.8	318	
	181	0	43	224	0				1.000	157.4	410	
East: PR-3 Este												
1 LT	32	893		925	3				0.499	8.2	295	
	32	893	0	925	3				0.499	8.2	295	

ALL VEHICLES	Total Flow	% HV	Max X	Aver. Delay	Max Queue
	1925	3	1.000	22.5	410

Total flow period = 60 minutes. Peak flow period = 15 minutes.

Queue values in this table are 95% back of queue (feet).

Note: Basic Saturation Flows are not adjusted at roundabouts or sign-controlled intersections and apply only to continuous lanes.

Sea View II
Intrseccion PR-3 & Ciudad Cristiana; Hora Pico AM, 2011 Sin Proyecto
Intersection ID: 2
Stop Sign Controlled Intersection
Flow Scale = 103%

Table S.15 - CAPACITY AND LEVEL OF SERVICE

Mov No.	Mov Typ	Total Flow (veh /h)	Total Cap. (veh /h)	Deg. of Satn (v/c)	Aver. Delay (sec)	LOS
West: PR-3 Oeste						
12	T	722	1920	0.376	0.0	A
13	R	54	1657	0.033	9.2	A
		776	3577	0.376	0.6	A
South: Ciudad Cristiana Sur						
32	L	181	181	1.000*	156.8	F
33	R	43	43	1.000*	159.8	F
		224	224	1.000	157.4	F
East: PR-3 Este						
22	LT	925	1854	0.499	8.2	A
		925	1854	0.499	8.2	A
ALL VEHICLES:		1925	5655	1.000	22.5	C

Level of Service calculations are based on average control delay including geometric delay (HCM criteria), independent of the current delay definition used.
For the criteria, refer to the "Level of Service" topic in the aaSIDRA Output Guide or the Output section of the on-line help.
* Maximum v/c ratio, or critical green periods

--- End of aaSIDRA Output ---

Akcelik & Associates Pty Ltd - aaSIDRA 2.0.0.205

Servicios Técnicos Integrados
Francisco J. Reyes Registered User No. 50310
Licence Type: Professional, Single Computer

Time and Date of Analysis 4:52 PM, May 4,2009

Filename: F:\My Documents\Francisco\Consultores\April\Humacao\Sea View II\Sidra\CC-3-11PMS.OUT

Sea View II
Intrseccion PR-3 & Ciudad Cristiana; Hora Pico PM, 2011 Sin Proyecto
Intersection ID: 2

aaTraffic SIDRA US Highway Capacity Manual (2000) Version

RUN INFORMATION

* Basic Parameters:
  Intersection Type: Unsignalised - Two-Way Stop Control
  Driving on the right-hand side of the road
  Input data specified in US units
  Default Values File No. 11
  Peak flow period (for performance): 15 minutes
  Unit time (for volumes): 60 minutes (Total Flow Period)
  Delay definition: Control delay
  Geometric delay included
  HCM Delay and Queue Models option selected
  Level of Service based on: Delay (HCM method)
  Queue definition: Back of queue, 95th Percentile

Sea View II
Intrseccion PR-3 & Ciudad Cristiana; Hora Pico PM, 2011 Sin Proyecto
Intersection ID: 2
Stop Sign Controlled Intersection
Flow Scale = 103%

Table S.3 - INTERSECTION PARAMETERS

Intersection Level of Service	=	A
Worst movement Level of Service	=	E
Average intersection delay (s)	=	7.3
Largest average movement delay (s)	=	42.3
Largest back of queue, 95% (ft)	=	242
Performance Index	=	28.69
Degree of saturation (highest)	=	0.439
Practical Spare Capacity (lowest)	=	82 %
Total vehicle capacity, all lanes (veh/h)	=	5653
Total vehicle flow (veh/h)	=	1830
Total person flow (pers/h)	=	2196
Total vehicle delay (veh-h/h)	=	3.69
Total person delay (pers-h/h)	=	4.42

Total effective vehicle stops (veh/h)	=	267
Total effective person stops (pers/h)	=	320
Total vehicle travel (veh-mi/h)	=	763.0
Total cost ($/h)	=	283.19
Total fuel (ga/h)	=	33.3
Total CO2 (kg/h)	=	315.27

Sea View II
Intrseccion PR-3 & Ciudad Cristiana; Hora Pico PM, 2011 Sin Proyecto
Intersection ID: 2
Stop Sign Controlled Intersection
Flow Scale = 103%

Table S.6 - INTERSECTION PERFORMANCE

Total Flow (veh/h)	Deg. Satn x	Total Delay (veh-h/h)	Total Delay (pers-h/h)	Aver. Delay (sec)	Prop. Queued	Eff. Stop Rate	Longest Queue (ft)	Perf. Index	Aver. Speed (mph)
INTERSECTION (persons):									
2196	0.439		4.42	7.3	0.466	0.15		28.69	53.6

Queue values in this table are 95% back of queue (feet).

Sea View II
Intrseccion PR-3 & Ciudad Cristiana; Hora Pico PM, 2011 Sin Proyecto
Intersection ID: 2
Stop Sign Controlled Intersection
Flow Scale = 103%

Table S.7 - LANE PERFORMANCE

Lane No.	Mov No.	Dem Flow (veh /h)	Cap (veh /h)	Deg. Satn x	Aver. Delay (sec)	Eff. Stop Rate	Queue 95% Back (vehs)	Queue 95% Back (ft)	Short Lane (ft)
West: PR-3 Oeste									
1 T	12	808	1945	0.416	0.0	0.00	0.0	0	
2 R	13	162	1685	0.096	9.1	0.65	0.0	0	
South: Ciudad Cristiana Sur									
1 L	32	46	133	0.344	45.8	1.04	1.9	49	
2 LR	32, 33	56	164	0.344	38.0	1.05	2.0	51	
East: PR-3 Este									
1 LT	22	758	1726	0.439	10.0	0.07	9.5	242	

Sea View II
Intrseccion PR-3 & Ciudad Cristiana; Hora Pico PM, 2011 Sin Proyecto
Intersection ID: 2
Stop Sign Controlled Intersection

Flow Scale = 103%

Table S.10 - MOVEMENT CAPACITY AND PERFORMANCE SUMMARY

Mov No.	Mov Typ	Dem Flow (veh /h)	Total Cap. (veh /h)	Lane Util (%)	Deg. Satn x	Aver. Delay (sec)	Eff. Stop Rate	95% Back of Queue (veh)	Perf. Index
West: PR-3 Oeste									
12	T	808	1945	100	0.415	0.0	0.00	0.0	8.43
13	R	162	1685	100	0.096	9.1	0.65	0.0	2.68
South: Ciudad Cristiana Sur									
32	L	82	239	100	0.343	42.3	1.04	2.0	3.32
33	R	20	58	100	0.345	38.0	1.05	2.0	0.76
East: PR-3 Este									
22	LT	758	1726	100	0.439*	10.0	0.07	9.5	13.50

* Maximum degree of saturation

Sea View II
Intrseccion PR-3 & Ciudad Cristiana; Hora Pico PM, 2011 Sin Proyecto
Intersection ID: 2
Stop Sign Controlled Intersection
Flow Scale = 103%

Table S.14 - SUMMARY OF INPUT AND OUTPUT DATA

Lane No.	Demand Flow (veh/h) L	T	R	Tot	%HV	Adj. Basic Satf.	Eff Grn (secs) 1st	2nd	Deg Sat x	Aver. Delay (sec)	Longest Queue (ft)	Shrt Lane (ft)
West: PR-3 Oeste												
1 T		808		808	3				0.416	0.0	0	
2 R			162	162	1				0.096	9.1	0	
	0	808	162	970	3				0.416	1.5		
South: Ciudad Cristiana Sur												
1 L	46			46	0				0.344	45.8	49	
2 LR	36		20	56	0				0.344	38.0	51	
	82	0	20	102	0				0.344	41.5	51	
East: PR-3 Este												
1 LT	48	710		758	3				0.439	10.0	242	
	48	710	0	758	3				0.439	10.0	242	

ALL VEHICLES	Total Flow	% HV	Max X	Aver. Delay	Max Queue
	1830	3	0.439	7.3	242

Total flow period = 60 minutes. Peak flow period = 15 minutes.

Queue values in this table are 95% back of queue (feet).

Note: Basic Saturation Flows are not adjusted at roundabouts or sign-controlled intersections and apply only to continuous lanes.

Sea View II
Intrseccion PR-3 & Ciudad Cristiana; Hora Pico PM, 2011 Sin Proyecto
Intersection ID: 2
Stop Sign Controlled Intersection
Flow Scale = 103%

Table S.15 - CAPACITY AND LEVEL OF SERVICE

Mov No.	Mov Typ	Total Flow (veh /h)	Total Cap. (veh /h)	Deg. of Satn (v/c)	Aver. Delay (sec)	LOS
West: PR-3 Oeste						
12	T	808	1945	0.415	0.0	A
13	R	162	1685	0.096	9.1	A
		970	3630	0.415	1.5	A
South: Ciudad Cristiana Sur						
32	L	82	239	0.343	42.3	E
33	R	20	58	0.345	38.0	E
		102	297	0.345	41.5	E
East: PR-3 Este						
22	LT	758	1726	0.439*	10.0	A
		758	1726	0.439	10.0	A
ALL VEHICLES:		1830	5653	0.439	7.3	A

Level of Service calculations are based on average control delay including geometric delay (HCM criteria), independent of the current delay definition used.
For the criteria, refer to the "Level of Service" topic in the aaSIDRA Output Guide or the Output section of the on-line help.

* Maximum v/c ratio, or critical green periods

--- End of aaSIDRA Output ---

Akcelik & Associates Pty Ltd - aaSIDRA 2.0.0.205

Servicios Técnicos Integrados
Francisco J. Reyes Registered User No. 50310
Licence Type: Professional, Single Computer

Time and Date of Analysis 3:11 AM, May 4,2009

Filename: F:\My Documents\Francisco\Consultores\April\Humacao\Sea View II\Sidra\CCom-3-11AMS.OUT

Sea View II
Int. PR-3 & Acceso a Centro Comercial, Hora Pico AM, 2011 Sin Proyecto
Intersection ID: 3

aaTraffic SIDRA US Highway Capacity Manual (2000) Version

RUN INFORMATION

Parameter sensitivity run: "Optimum" Maximum Green = 50.0 %

* Basic Parameters:
  Intersection Type: Signalised - Actuated Isolated
  For fully-actuated signal timings, the following specifications will be ignored:
    Any maximum cycle time specification
    Any user-given cycle time (unless phase times also given)
    User-given cycle and phase times (if variable flow scale run)
    Any variable cycle time specification
    Any green split priority specification
  Driving on the right-hand side of the road
  Input data specified in US units
  Default Values File No. 11
  Peak flow period (for performance): 15 minutes
  Unit time (for volumes): 60 minutes (Total Flow Period)
  Delay definition: Control delay
                Geometric delay included
  HCM Delay and Queue Models option selected
  Level of Service based on: Delay (HCM method)
  Queue definition: Back of queue, 95th Percentile

* No. of Main (Timing-Capacity) Iterations = 3
  Comparison of last two iterations:
    Difference in intersection degree of satn = 0.0 %
    Difference in total vehicle capacity = 0.0 %
    Largest difference in eff. green times = 0 secs
    (max. value for stopping = 0 secs)

Sea View II
Int. PR-3 & Acceso a Centro Comercial, Hora Pico AM, 2011 Sin Proyecto
Intersection ID: 3
Actuated Isolated Signals, Cycle Time = 48
Flow Scale = 103%

Table S.3 - INTERSECTION PARAMETERS

Critical Movements: 12, 21, 43(2nd)

L= 18 Y= 0.369 U= 0.623 T= 47.9

Cycle Time:

Minimum	Maximum	Practical	Chosen
30	NA	48	48

Intersection Level of Service	=	B
Worst movement Level of Service	=	C
Average intersection delay (s)	=	11.8
Largest average movement delay (s)	=	32.7
Largest back of queue, 95% (ft)	=	361
Performance Index	=	73.88
Degree of saturation (highest)	=	0.666
Practical Spare Capacity (lowest)	=	35 %
Total vehicle capacity, all lanes (veh/h)	=	6582
Total vehicle flow (veh/h)	=	2716
Total person flow (pers/h)	=	3259
Total vehicle delay (veh-h/h)	=	8.89
Total person delay (pers-h/h)	=	10.67
Total effective vehicle stops (veh/h)	=	1624
Total effective person stops (pers/h)	=	1948
Total vehicle travel (veh-mi/h)	=	1132.0
Total cost ($/h)	=	461.89
Total fuel (ga/h)	=	56.2
Total CO2 (kg/h)	=	532.80

Sea View II
Int. PR-3 & Acceso a Centro Comercial, Hora Pico AM, 2011 Sin Proyecto
Intersection ID: 3
Actuated Isolated Signals, Cycle Time = 48
Flow Scale = 103%

Table S.4 - PHASE INFORMATION

Phase Change Times: 0, 13, 38
Phase Green Times: 9, 21, 6

Current Phase Sequence No.: 1
Input phase sequence: A B D
Output phase sequence: A B D

Sea View II
Int. PR-3 & Acceso a Centro Comercial, Hora Pico AM, 2011 Sin Proyecto
Intersection ID: 3
Actuated Isolated Signals, Cycle Time = 48
Flow Scale = 103%

Table S.6 - INTERSECTION PERFORMANCE

Total	Deg.	Total	Total	Aver.	Prop.	Eff.	Longest	Perf.	Aver.

Flow (veh/h)	Satn x	Delay (veh-h/h)	Delay (pers-h/h)	Delay (sec)	Queued	Stop Rate	Queue (ft)	Index	Speed (mph)
INTERSECTION (persons):									
3259	0.666		10.67	11.8	0.654	0.60		73.88	48.6

Queue values in this table are 95% back of queue (feet).

Sea View II
Int. PR-3 & Acceso a Centro Comercial, Hora Pico AM, 2011 Sin Proyecto
Intersection ID: 3
Actuated Isolated Signals, Cycle Time = 48
Flow Scale = 103%

Table S.7 - LANE PERFORMANCE

Lane No.	Mov No.	Effective Green Times (sec) R1	G1	R2	G2	Dem Flow (veh /h)	Cap (veh /h)	Deg. Satn x	Aver. Delay (sec)	Eff. Stop Rate	Queue 95% Back (vehs)	(ft)	Shrt Lane (ft)
West: PR-3 Oeste													
1 L	12	39	9	0	0	145	347	0.417	30.4	0.78	4.3	111	160
2 L	12	39	9	0	0	145	347	0.417	30.4	0.78	4.3	111	160
3 T	11	14	34	0	0	563	1354	0.415	3.5	0.38	7.5	194	
4 T	11	14	34	0	0	563	1354	0.415	3.5	0.38	7.5	194	
East: PR-3 Este													
1 T	21	27	21	0	0	563	846	0.666	14.4	0.73	14.1	361	
2 TR	21, 23	19	21	7	1	564	847	0.666	14.5	0.75	13.6	351	
North: Centro Comercial Norte													
1 L	42	42	6	0	0	38	208	0.183	32.7	0.73	1.2	33	
2 R	43	15	23	4	6	69	640	0.107	13.2	0.75	0.8	22	
3 R	43	15	23	4	6	69	640	0.107	13.2	0.75	0.8	22	

Sea View II
Int. PR-3 & Acceso a Centro Comercial, Hora Pico AM, 2011 Sin Proyecto
Intersection ID: 3
Actuated Isolated Signals, Cycle Time = 48
Flow Scale = 103%

Table S.10 - MOVEMENT CAPACITY AND PERFORMANCE SUMMARY

Mov No.	Mov Typ	Dem Flow (veh /h)	Total Cap. (veh /h)	Lane Util (%)	Deg. Satn x	Eff. Grn 1st Grn	Eff. Grn 2nd Grn	Aver. Delay (sec)	Eff. Stop Rate	95% Back of Queue (veh)	Perf. Index
West: PR-3 Oeste											
12	L	289	693	100	0.417	9*		30.4	0.78	4.3	10.94
11	T	1125	2708	100	0.415	34		3.5	0.38	7.5	22.75

East: PR-3 Este												
21	T		1085	1630	100	0.666*	21*		14.1	0.73	14.1	34.01
23	R	(Un2)	42	63	100	0.664	21	16	23.9	0.87	13.6	1.45
North: Centro Comercial Norte												
42	L		38	208	100	0.183	6		32.7	0.73	1.2	1.46
43	R	(Un1)	137	1280	100	0.107	23	6*	13.2	0.75	0.8	3.27

* Maximum degree of saturation, or critical green periods

Sea View II
Int. PR-3 & Acceso a Centro Comercial, Hora Pico AM, 2011 Sin Proyecto
Intersection ID: 3
Actuated Isolated Signals, Cycle Time = 48
Flow Scale = 103%

Table S.14 - SUMMARY OF INPUT AND OUTPUT DATA

Lane No.	Demand Flow (veh/h) L	T	R	Tot	%HV	Adj. Basic Satf.	Eff Grn (secs) 1st	2nd	Deg Sat x	Aver. Delay (sec)	Longest Queue (ft)	Shrt Lane (ft)
West: PR-3 Oeste												
1 L	145			145	3	2000	9		0.417	30.4	111	160
2 L	145			145	3	2000	9		0.417	30.4	111	160
3 T		563		563	5	2000	34		0.415	3.5	194	
4 T		563		563	5	2000	34		0.415	3.5	194	
	289	1125	0	1414	4				0.417	9.0	194	
East: PR-3 Este												
1 T		563		563	3	2000	21		0.666	14.4	361	
2 TR		522	42	564	4	2000	21	1	0.666	14.5	351	
	0	1085	42	1127	4				0.666	14.4	361	
North: Centro Comercial Norte												
1 L	38			38	16	2000	6		0.183	32.7	33	
2 R			69	69	9	2000	23	6	0.107	13.2	22	
3 R			69	69	9	2000	23	6	0.107	13.2	22	
	38	0	137	175	11				0.183	17.4	33	

ALL VEHICLES	Total Flow	% HV	Cycle Time	Max X	Aver. Delay	Max Queue
	2716	5	48	0.666	11.8	361

Total flow period = 60 minutes. Peak flow period = 15 minutes.

Queue values in this table are 95% back of queue (feet).

Note: Basic Saturation Flows (in through car units) have been adjusted for grade, lane widths, parking manoeuvres and bus stops.

Sea View II

Int. PR-3 & Acceso a Centro Comercial, Hora Pico AM, 2011 Sin Proyecto
Intersection ID: 3
Actuated Isolated Signals, Cycle Time = 48
Flow Scale = 103%

Table S.15 - CAPACITY AND LEVEL OF SERVICE

Mov No.	Mov Typ	Green Time Ratio (g/C) 1st grn	2nd grn	Total Flow (veh /h)	Total Cap. (veh /h)	Deg. of Satn (v/c)	Aver. Delay (sec)	LOS
West: PR-3 Oeste								
12 L		0.188*		289	693	0.417	30.4	C
11 T		0.708		1125	2708	0.415	3.5	A
				1414	3401	0.417	9.0	A
East: PR-3 Este								
21 T		0.438*		1085	1630	0.666*	14.1	B
23 R	(Un2)	0.438	0.333	42	63	0.664	23.9	C
				1127	1693	0.666	14.4	B
North: Centro Comercial Norte								
42 L		0.125		38	208	0.183	32.7	C
43 R	(Un1)	0.479	0.125*	137	1280	0.107	13.2	B
				175	1488	0.183	17.4	B
ALL VEHICLES:				2716	6582	0.666	11.8	B
INTERSECTION (persons):				3259	6582	0.666	11.8	

Level of Service calculations are based on
average control delay including geometric delay (HCM criteria),
independent of the current delay definition used.
For the criteria, refer to the "Level of Service" topic in the
aaSIDRA Output Guide or the Output section of the on-line help.
* Maximum v/c ratio, or critical green periods

Sea View II
Int. PR-3 & Acceso a Centro Comercial, Hora Pico AM, 2011 Sin Proyecto
Intersection ID: 3

Table S.23 - SENSITIVITY ANALYSIS RESULTS

Performance Measure	Smallest Value	Param Scale
Degree of Satn	0.666	50
Average Delay	11.8	50
Stop Rate	0.60	50

Max. Queue for Any Movement	14.1	50
Perf. Index	73.9	50
Cost total	461.9	50

Performance Measure	Largest Value	Param Scale
Total Vehicle Cap.	6582	50
Prac. Spare Cap.	35	50

Sea View II
Int. PR-3 & Acceso a Centro Comercial, Hora Pico AM, 2011 Sin Proyecto
Intersection ID: 3
Actuated Isolated Signals, Cycle Time = 48
Flow Scale = 103%

Table D.5 - PROGRESSION FACTORS & ACTUATED SIGNAL PARAMETERS

Mov No.	Control	Coord.	Arrival Type	Delay Prog. Factor	Queue Prog. Factor	Gap Settings es	Gap Settings eh	Disp. Grn. Settings 1st Grn Gmin	1st Grn Gmax	2nd Grn Gmin	2nd Grn Gmax
West: PR-3 Oeste											
12	VA	No	3	1.000	1.000	2.0	2.6	6	10		
11	VA	No	3	1.000	1.000	2.5	3.1	6	25		
East: PR-3 Este											
21	VA	No	3	1.000	1.000	2.5	3.1	6	25		
23	VA	No	3	1.000	1.000	2.5	3.1	6	25	6	25
North: Centro Comercial Norte											
42	VA	No	3	1.000	1.000	2.0	2.6	6	10		
43	VA	No	3	1.000	1.000	2.5	3.1	6	25	6	25

Sea View II
Int. PR-3 & Acceso a Centro Comercial, Hora Pico AM, 2011 Sin Proyecto
Intersection ID: 3

Scaled sensitivity parameter: Maximum Green

Table V.23 - INTERSECTION SUMMARY FOR VARIABLE PARAMETER SCALE

Param Scale (%)	Cycle Time (sec)	Total Veh. Cap.	Intersn Deg. of Satn	Prac. Spare Cap.	Aver. Delay (sec)	Stop Rate	Longest Queue (veh)	Perf. Index	Cost Total $/h
50	48	6582	0.666	35	11.8	0.60	14.1	73.9	461.9
55	48	6580	0.666	35	11.8	0.60	14.1	73.9	461.9
60	48	6580	0.666	35	11.8	0.60	14.1	73.9	461.9
65	48	6579	0.666	35	11.8	0.60	14.1	73.9	461.9
70	48	6578	0.666	35	11.8	0.60	14.1	73.9	461.9
75	48	6577	0.666	35	11.8	0.60	14.1	73.9	461.9

80	48	6577	0.666	35	11.8	0.60	14.1	73.9	461.9
85	48	6577	0.666	35	11.8	0.60	14.1	73.9	461.9
90	48	6576	0.666	35	11.8	0.60	14.1	73.9	461.9
95	48	6576	0.666	35	11.8	0.60	14.1	73.9	461.9
100	48	6576	0.666	35	11.8	0.60	14.1	73.9	461.9
105	48	6576	0.666	35	11.8	0.60	14.1	73.9	461.9
110	48	6576	0.666	35	11.8	0.60	14.1	73.9	461.9
115	48	6575	0.666	35	11.8	0.60	14.1	73.9	461.9
120	48	6575	0.666	35	11.8	0.60	14.1	73.9	461.9

--- End of aaSIDRA Output ---

```
                 Akcelik & Associates Pty Ltd - aaSIDRA 2.0.0.205
                 ------------------------------------------------
                 Servicios Técnicos Integrados
                 Francisco J. Reyes        Registered User No. 50310
                 Licence Type: Professional, Single Computer

                 Time and Date of Analysis    3:15 AM, May  4,2009

 Filename: F:\My Documents\Francisco\Consultores\April\Humacao\Sea View
II\Sidra\CCom-3-11PMS.OUT

 Sea View II
 Int. PR-3 & Acceso a Centro Comercial, Hora Pico PM, 2011 Sin Proyecto
 Intersection ID:     3

 aaTraffic SIDRA US Highway Capacity Manual (2000) Version


 RUN INFORMATION
 ---------------
 Parameter sensitivity run: "Optimum" Maximum Green =  60.0 %

 * Basic Parameters:
   Intersection Type: Signalised - Actuated Isolated
   For fully-actuated signal timings, the following specifications will be
ignored:
     Any maximum cycle time specification
     Any user-given cycle time (unless phase times also given)
     User-given cycle and phase times (if variable flow scale run)
     Any variable cycle time specification
     Any green split priority specification
   Driving on the right-hand side of the road
   Input data specified in US units
   Default Values File No. 11
   Peak flow period (for performance): 15 minutes
   Unit time (for volumes): 60 minutes (Total Flow Period)
   Delay definition: Control delay
                     Geometric delay included
   HCM Delay and Queue Models option selected
   Level of Service based on: Delay (HCM method)
   Queue definition: Back of queue, 95th Percentile

 * No. of Main (Timing-Capacity) Iterations =  2
   Comparison of last two iterations:
     Difference in intersection degree of satn =  0.0 %
     Difference in total vehicle capacity      =  0.0 %
     Largest difference in eff. green times =  0 secs
     (max. value for stopping = 0 secs)
```

```
 Sea View II
 Int. PR-3 & Acceso a Centro Comercial, Hora Pico PM, 2011 Sin Proyecto
 Intersection ID:     3
            Actuated Isolated Signals, Cycle Time =  58
 Flow Scale = 103%
```

Table S.3 - INTERSECTION PARAMETERS

Critical Movements: 12, 23(1st), 43(2nd)

L= 24 Y= 0.441 U= 0.582 T= 57.8

Cycle Time:

Minimum	Maximum	Practical	Chosen
30	NA	58	58

Intersection Level of Service	=	B
Worst movement Level of Service	=	D
Average intersection delay (s)	=	18.9
Largest average movement delay (s)	=	43.7
Largest back of queue, 95% (ft)	=	467
Performance Index	=	110.23
Degree of saturation (highest)	=	0.767
Practical Spare Capacity (lowest)	=	17 %
Total vehicle capacity, all lanes (veh/h)	=	6744
Total vehicle flow (veh/h)	=	3364
Total person flow (pers/h)	=	4037
Total vehicle delay (veh-h/h)	=	17.64
Total person delay (pers-h/h)	=	21.17
Total effective vehicle stops (veh/h)	=	2265
Total effective person stops (pers/h)	=	2718
Total vehicle travel (veh-mi/h)	=	1400.2
Total cost ($/h)	=	657.15
Total fuel (ga/h)	=	73.7
Total CO2 (kg/h)	=	698.67

Sea View II
Int. PR-3 & Acceso a Centro Comercial, Hora Pico PM, 2011 Sin Proyecto
Intersection ID: 3
Actuated Isolated Signals, Cycle Time = 58
Flow Scale = 103%

Table S.4 - PHASE INFORMATION

Phase Change Times: 0, 16, 45
Phase Green Times: 12, 25, 9

Current Phase Sequence No.: 1
Input phase sequence: A B D
Output phase sequence: A B D

Sea View II
Int. PR-3 & Acceso a Centro Comercial, Hora Pico PM, 2011 Sin Proyecto
Intersection ID: 3
Actuated Isolated Signals, Cycle Time = 58
Flow Scale = 103%

Table S.6 - INTERSECTION PERFORMANCE

Total	Deg.	Total	Total	Aver.	Prop.	Eff.	Longest	Perf.	Aver.

Flow (veh/h)	Satn x	Delay (veh-h/h)	Delay (pers-h/h)	Delay (sec)	Queued	Stop Rate	Queue (ft)	Index	Speed (mph)
INTERSECTION (persons):									
4037	0.767		21.17	18.9	0.701	0.67		110.23	41.1

Queue values in this table are 95% back of queue (feet).

Sea View II
Int. PR-3 & Acceso a Centro Comercial, Hora Pico PM, 2011 Sin Proyecto
Intersection ID: 3
Actuated Isolated Signals, Cycle Time = 58
Flow Scale = 103%

Table S.7 - LANE PERFORMANCE

Lane No.	Mov No.	Effective Green Times (sec) R1	G1	R2	G2	Dem Flow (veh /h)	Cap (veh /h)	Deg. Satn x	Aver. Delay (sec)	Eff. Stop Rate	Queue 95% Back (vehs)	(ft)	Shrt Lane (ft)
West: PR-3 Oeste													
1 L	12	46	12	0	0	294	383	0.767	43.7	0.87	11.5*	295	160
2 L	12	46	12	0	0	294	383	0.767	43.7	0.87	11.5*	295	160
3 T	11	17	41	0	0	505	1356	0.372	4.0	0.37	7.7	198	
4 T	11	17	41	0	0	505	1356	0.372	4.0	0.37	7.7	198	
East: PR-3 Este													
1 T	21	33	25	0	0	598	835	0.716	18.5	0.76	18.2	467	
2 TR	21, 23	12	1	20	25	570	795	0.716	20.4	0.79	17.3	447	
North: Centro Comercial Norte													
1 L	42	49	9	0	0	105	259	0.405	36.9	0.78	3.9	109	
2 R	43	18	27	4	9	247	688	0.358	14.7	0.79	4.4	110	
3 R	43	18	27	4	9	247	688	0.358	14.7	0.79	4.4	110	

* Queue length exceeds short lane length due to specification of a percentile queue in the aaSIDRA Configuration File. For calculation of this statistic, you may specify the lane with full length.

Sea View II
Int. PR-3 & Acceso a Centro Comercial, Hora Pico PM, 2011 Sin Proyecto
Intersection ID: 3
Actuated Isolated Signals, Cycle Time = 58
Flow Scale = 103%

Table S.10 - MOVEMENT CAPACITY AND PERFORMANCE SUMMARY

Mov No.	Mov Typ	Dem Flow (veh /h)	Total Cap. (veh /h)	Lane Util (%)	Deg. Satn x	Eff. Grn 1st Grn	Eff. Grn 2nd Grn	Aver. Delay (sec)	Eff. Stop Rate	95% Back of Queue (veh)	Perf. Index
West: PR-3 Oeste											

12	L		588	766	100	0.767*	12*		43.7	0.87	11.5	28.04
11	T		1010	2712	100	0.372	41		4.0	0.37	7.7	21.43
East: PR-3 Este												
21	T		1109	1548	100	0.716	25		18.9	0.77	18.2	40.32
23	R	(Un2)	59	83	100	0.713	25*	17	29.6	0.88	17.3	2.35
North: Centro Comercial Norte												
42	L		105	259	100	0.405	9		36.9	0.78	3.9	4.53
43	R	(Un1)	493	1376	100	0.358	27	9*	14.7	0.79	4.4	13.57

* Maximum degree of saturation, or critical green periods

Sea View II
Int. PR-3 & Acceso a Centro Comercial, Hora Pico PM, 2011 Sin Proyecto
Intersection ID: 3
Actuated Isolated Signals, Cycle Time = 58
Flow Scale = 103%

Table S.14 - SUMMARY OF INPUT AND OUTPUT DATA

Lane No.	Demand Flow (veh/h) L	T	R	Tot	%HV	Adj. Basic Satf.	Eff Grn (secs) 1st	2nd	Deg Sat x	Aver. Delay (sec)	Longest Queue (ft)	Shrt Lane (ft)
West: PR-3 Oeste												
1 L	294			294	3	2000	12		0.767	43.7	295*	160
2 L	294			294	3	2000	12		0.767	43.7	295*	160
3 T		505		505	4	2000	41		0.372	4.0	198	
4 T		505		505	4	2000	41		0.372	4.0	198	
	588	1010	0	1598	4				0.767	18.6	295	
East: PR-3 Este												
1 T		598		598	3	2000	25		0.716	18.5	467	
2 TR		511	59	570	5	2000	1	25	0.716	20.4	447	
	0	1109	59	1168	4				0.716	19.4	467	
North: Centro Comercial Norte												
1 L	105			105	15	2000	9		0.405	36.9	109	
2 R			247	247	1	2000	27	9	0.358	14.7	110	
3 R			247	247	1	2000	27	9	0.358	14.7	110	
	105	0	493	598	4				0.405	18.6	110	

ALL VEHICLES	Total Flow	% HV	Cycle Time	Max X	Aver. Delay	Max Queue
	3364	4	58	0.767	18.9	467

Total flow period = 60 minutes. Peak flow period = 15 minutes.

Queue values in this table are 95% back of queue (feet).

Note: Basic Saturation Flows (in through car units) have been adjusted for grade, lane widths, parking manoeuvres and bus stops.

* Queue length exceeds short lane length due to specification of a percentile queue in the aaSIDRA Configuration File. For calculation of this statistic, you may specify the lane with full length.

Sea View II
Int. PR-3 & Acceso a Centro Comercial, Hora Pico PM, 2011 Sin Proyecto
Intersection ID: 3
Actuated Isolated Signals, Cycle Time = 58
Flow Scale = 103%

Table S.15 - CAPACITY AND LEVEL OF SERVICE

Mov No.	Mov Typ	Green Ratio (g/C) 1st grn	Green Ratio (g/C) 2nd grn	Total Flow (veh /h)	Total Cap. (veh /h)	Deg. of Satn (v/c)	Aver. Delay (sec)	LOS
West: PR-3 Oeste								
12	L	0.207*		588	766	0.767*	43.7	D
11	T	0.707		1010	2712	0.372	4.0	A
				1598	3479	0.767	18.6	B
East: PR-3 Este								
21	T	0.431		1109	1548	0.716	18.9	B
23	R (Un2)	0.431*	0.293	59	83	0.713	29.6	C
				1168	1631	0.716	19.4	B
North: Centro Comercial Norte								
42	L	0.155		105	259	0.405	36.9	D
43	R (Un1)	0.466	0.155*	493	1376	0.358	14.7	B
				598	1635	0.405	18.6	B
ALL VEHICLES:				3364	6744	0.767	18.9	B
INTERSECTION (persons):				4037	6744	0.767	18.9	

Level of Service calculations are based on
average control delay including geometric delay (HCM criteria),
independent of the current delay definition used.
For the criteria, refer to the "Level of Service" topic in the
aaSIDRA Output Guide or the Output section of the on-line help.

* Maximum v/c ratio, or critical green periods

Sea View II
Int. PR-3 & Acceso a Centro Comercial, Hora Pico PM, 2011 Sin Proyecto
Intersection ID: 3

Table S.23 - SENSITIVITY ANALYSIS RESULTS

Performance Measure	Smallest Value	Param Scale
Degree of Satn	0.767	60
Average Delay	18.9	60
Stop Rate	0.67	110
Max. Queue for Any Movement	17.2	50
Perf. Index	110.2	60
Cost total	657.1	60

Performance Measure	Largest Value	Param Scale
Total Vehicle Cap.	6744	60
Prac. Spare Cap.	17	60

Sea View II
Int. PR-3 & Acceso a Centro Comercial, Hora Pico PM, 2011 Sin Proyecto
Intersection ID: 3
Actuated Isolated Signals, Cycle Time = 58
Flow Scale = 103%

Table D.5 - PROGRESSION FACTORS & ACTUATED SIGNAL PARAMETERS

Mov No.	Control	Coord.	Arrival Type	Delay Prog. Factor	Queue Prog. Factor	Gap Settings es	Gap Settings eh	Disp. Grn. Settings 1st Grn Gmin	1st Grn Gmax	2nd Grn Gmin	2nd Grn Gmax
West: PR-3 Oeste											
12	VA	No	3	1.000	1.000	2.0	2.6	6	12		
11	VA	No	3	1.000	1.000	2.5	3.1	6	30		
East: PR-3 Este											
21	VA	No	3	1.000	1.000	2.5	3.1	6	30		
23	VA	No	3	1.000	1.000	2.5	3.1	6	30	6	30
North: Centro Comercial Norte											
42	VA	No	3	1.000	1.000	2.0	2.6	6	12		
43	VA	No	3	1.000	1.000	2.5	3.1	6	30	6	30

Sea View II
Int. PR-3 & Acceso a Centro Comercial, Hora Pico PM, 2011 Sin Proyecto
Intersection ID: 3

Scaled sensitivity parameter: Maximum Green

Table V.23 - INTERSECTION SUMMARY FOR VARIABLE PARAMETER SCALE

Param Scale	Cycle Time	Total Veh.	Intersn Deg. of	Prac. Spare	Aver. Delay	Stop Rate	Longest Queue	Perf. Index	Cost Total

(%)	(sec)	Cap.	Satn	Cap.	(sec)		(veh)		$/h
50	54	6599	0.857	5	20.3	0.69	17.2	111.0	669.5
55	56	6673	0.808	11	19.4	0.68	17.7	110.4	661.5
60	58	6744	0.767	17	18.9	0.67	18.2	110.2	657.1
65	60	6698	0.851	6	20.1	0.67	18.7	112.7	668.7
70	62	6672	0.863	4	20.8	0.68	19.8	115.4	676.7
75	64	6690	0.875	3	20.8	0.68	20.2	116.1	677.3
80	66	6707	0.887	1	20.7	0.67	20.7	116.6	677.3
85	68	6676	0.899	0	21.4	0.68	21.9	119.3	685.6
90	70	6691	0.912	-1	21.4	0.67	22.4	120.0	685.9
95	72	6712	0.924	-3	21.3	0.67	22.7	120.4	685.1
100	74	6683	0.937	-4	22.0	0.68	23.9	123.1	693.3
105	76	6696	0.950	-5	22.0	0.67	24.3	123.8	693.3
110	78	6709	0.962	-6	21.9	0.67	24.8	124.3	693.4
115	78	6691	0.946	-5	22.8	0.67	25.6	126.3	703.1
120	80	6724	0.959	-6	22.8	0.68	25.3	127.1	675.3

--- End of aaSIDRA Output ---

ANEJO 5
ANALISI DE TRANSITO 2011, CON PROYECTO
AASIDRA 2.0

Akcelik & Associates Pty Ltd - aaSIDRA 2.0.0.205

Servicios Técnicos Integrados
Francisco J. Reyes Registered User No. 50310
Licence Type: Professional, Single Computer

Time and Date of Analysis 12:36 PM, May 4,2009

Filename: F:\My Documents\Francisco\Consultores\April\Humacao\Sea View II\Sidra\53-VH-3-11AMP.OUT

Sea View II
InT. PR-3, Rampa PR-53 & Villas de Humacao, Hora Pico AM, 2011 Con Proyecto
Intersection ID: 4

aaTraffic SIDRA US Highway Capacity Manual (2000) Version

RUN INFORMATION

Parameter sensitivity run: "Optimum" Maximum Green = 65.0 %

* Basic Parameters:
  Intersection Type: Signalised - Actuated Isolated
  For fully-actuated signal timings, the following specifications will be ignored:
    Any maximum cycle time specification
    Any user-given cycle time (unless phase times also given)
    User-given cycle and phase times (if variable flow scale run)
    Any variable cycle time specification
    Any green split priority specification
  Driving on the right-hand side of the road
  Input data specified in US units
  Default Values File No. 11
  Peak flow period (for performance): 15 minutes
  Unit time (for volumes): 60 minutes (Total Flow Period)
  Delay definition: Control delay
                    Geometric delay included
  HCM Delay and Queue Models option selected
  Level of Service based on: Delay (HCM method)
  Queue definition: Back of queue, 95th Percentile

* No. of Main (Timing-Capacity) Iterations = 2
  Comparison of last two iterations:
    Difference in intersection degree of satn = 0.0 %
    Difference in total vehicle capacity = 0.0 %
    Largest difference in eff. green times = 0 secs
    (max. value for stopping = 0 secs)

Sea View II
InT. PR-3, Rampa PR-53 & Villas de Humacao, Hora Pico AM, 2011 Con Proyecto
Intersection ID: 4
Actuated Isolated Signals, Cycle Time = 129
Flow Scale = 103%

Table S.3 - INTERSECTION PARAMETERS

Critical Movements: 53(1st), 22, 11, 41, 32

L= 93 Y= 0.117 U= 0.214 T= 120.6

Cycle Time:

Minimum	Maximum	Practical	Chosen
70	NA	119	129

Intersection Level of Service	=	E
Worst movement Level of Service	=	F
Average intersection delay (s)	=	64.3
Largest average movement delay (s)	=	130.1
Largest back of queue, 95% (ft)	=	1033
Performance Index	=	306.97
Degree of saturation (highest)	=	1.017
Practical Spare Capacity (lowest)	=	-11 %
Total vehicle capacity, all lanes (veh/h)	=	8279
Total vehicle flow (veh/h)	=	4422
Total person flow (pers/h)	=	5306
Total vehicle delay (veh-h/h)	=	79.03
Total person delay (pers-h/h)	=	94.84
Total effective vehicle stops (veh/h)	=	3959
Total effective person stops (pers/h)	=	4751
Total vehicle travel (veh-mi/h)	=	1841.2
Total cost ($/h)	=	1392.96
Total fuel (ga/h)	=	125.7
Total CO2 (kg/h)	=	1191.59

Sea View II
InT. PR-3, Rampa PR-53 & Villas de Humacao, Hora Pico AM, 2011 Con Proyecto
Intersection ID: 4
Actuated Isolated Signals, Cycle Time = 129
Flow Scale = 103%

Table S.4 - PHASE INFORMATION

Phase Change Times: 0, 23, 39, 75, 106
Phase Green Times: 20, 13, 33, 28, 20

Current Phase Sequence No.: 1
Input phase sequence: A B C D E
Output phase sequence: A B C D E

Sea View II
InT. PR-3, Rampa PR-53 & Villas de Humacao, Hora Pico AM, 2011 Con Proyecto
Intersection ID: 4
Actuated Isolated Signals, Cycle Time = 129
Flow Scale = 103%

Table S.6 - INTERSECTION PERFORMANCE

Total Flow	Deg. Satn	Total Delay	Total Delay	Aver. Delay	Prop. Queued	Eff. Stop	Longest Queue	Perf. Index	Aver. Speed

(veh/h)	x	(veh-h/h)	(pers-h/h)	(sec)		Rate	(ft)	(mph)
INTERSECTION (persons):								
5306	1.017	94.84	64.3	0.790	0.90		306.97	23.7

Queue values in this table are 95% back of queue (feet).

Sea View II
InT. PR-3, Rampa PR-53 & Villas de Humacao, Hora Pico AM, 2011 Con Proyecto
Intersection ID: 4
Actuated Isolated Signals, Cycle Time = 129
Flow Scale = 103%

Table S.7 - LANE PERFORMANCE

Lane No.	Mov No.	Effective Green Times (sec) R1	G1	R2	G2	Dem Flow (veh /h)	Cap (veh /h)	Deg. Satn x	Aver. Delay (sec)	Eff. Stop Rate	Queue 95% Back (vehs)	(ft)	Shrt Lane (ft)
West: PR-3 Oeste													
1 T	11	96	33	0	0	459	484	0.948	81.4	1.01	36.6	956	
2 T	11	96	33	0	0	459	484	0.948	81.4	1.01	36.6	956	
SouthWest: PR-3 Oeste													
1 L	52	109	20	0	0	275	283	0.970	114.0	1.01	24.9	645	
2 R	53	3	20	16	90	220	1058	0.208	12.4	0.76	3.1	81	
South: Villas de Humacao Sur													
1 L	32	109	20	0	0	291	286	1.016	129.5	1.06	27.4	703	
2 LTR	32, 33	109	20	0	0	273	269	1.016	130.3	1.07	26.1	683	
East: PR-3 Este													
1 L	22	116	13	0	0	111	147	0.756	94.0	0.81	9.8*	270	160
2 T	21	80	49	0	0	622	745	0.834	48.5	0.90	40.7	1033	
3 T	21	80	49	0	0	622	745	0.834	48.5	0.90	40.7	1033	
4 R	23	3	49	3	74	50	1302	0.038	9.4	0.65	0.2	5	160
North: Rampa PR-53 Norte													
1 L	42	101	28	0	0	219	405	0.540	61.0	0.82	15.3	388	
2 LT	42, 41	101	28	0	0	213	395	0.540	57.6	0.80	14.9	394	
3 R	43	0	129	0	0	609	1675	0.364	9.2	0.65	15.5#		60

\# Density (passenger cars per km or mile)
* Queue length exceeds short lane length due to specification of a percentile queue in the aaSIDRA Configuration File. For calculation of this statistic, you may specify the lane with full length.

Sea View II
InT. PR-3, Rampa PR-53 & Villas de Humacao, Hora Pico AM, 2011 Con Proyecto
Intersection ID: 4
Actuated Isolated Signals, Cycle Time = 129
Flow Scale = 103%

Table S.10 - MOVEMENT CAPACITY AND PERFORMANCE SUMMARY

Mov No.	Mov Typ	Dem Flow (veh /h)	Total Cap. (veh /h)	Lane Util (%)	Deg. Satn x	Eff. Grn 1st Grn	Eff. Grn 2nd Grn	Aver. Delay (sec)	Eff. Stop Rate	95% Back of Queue (veh)	Perf. Index
West: PR-3 Oeste											
11	T	918	969	100	0.948	33*		81.4	1.01	36.6	79.07
SouthWest: PR-3 Oeste											
52	L	275	283	100	0.970	20		114.0	1.01	24.9	27.14
53	R (Un2)	220	1057	100	0.208	20*	90	12.4	0.76	3.1	5.51
South: Villas de Humacao Sur											
32	L	416	409	100	1.016	20*		130.1	1.07	27.4	44.20
33	TR (Un1)	148	146	100	1.017*	20		129.4	1.07	26.1	15.73
East: PR-3 Este											
22	L	111	147<	100	0.756	13*		94.0	0.81	9.8	9.57
21	T	1243	1491	100	0.834	49		48.5	0.90	40.7	85.18
23	R (Und)	50	1302<	100	0.038	49	74	9.4	0.65	0.2	0.92
North: Rampa PR-53 Norte											
42	L	346	641	100	0.540	28		61.0	0.82	15.3	23.87
41	T	86	159	100	0.540	28*		52.0	0.76	14.9	5.70
43	R (Con)	609	1675	100	0.364	129		9.2	0.65	15.5 #	10.08

< Reduced capacity due to a short lane effect
* Maximum degree of saturation, or critical green periods
# Largest density (passenger cars per km or mile) for any lane

---

Sea View II
InT. PR-3, Rampa PR-53 & Villas de Humacao, Hora Pico AM, 2011 Con Proyecto
Intersection ID: 4
Actuated Isolated Signals, Cycle Time = 129
Flow Scale = 103%

Table S.14 - SUMMARY OF INPUT AND OUTPUT DATA

Lane No.	Demand Flow (veh/h) L	T	R	Tot	%HV	Adj. Basic Satf.	Eff Grn (secs) 1st	2nd	Deg Sat x	Aver. Delay (sec)	Longest Queue (ft)	Shrt Lane (ft)
West: PR-3 Oeste												
1 T		459		459	6	2000	33		0.948	81.4	956	
2 T		459		459	6	2000	33		0.948	81.4	956	
	0	918	0	918	6				0.948	81.4	956	
SouthWest: PR-3 Oeste												
1 L	275			275	4	2000	20		0.970	114.0	645	
2 R			220	220	6	2000	20	90	0.208	12.4	81	
	275	0	220	495	5				0.970	68.9	645	

South: Villas de Humacao Sur												
1 L	291			291	3	2000	20		1.016	129.5	703	
2 LTR	125	33	115	273	6	2000	20		1.016	130.3	683	
	416	33	115	564	5				1.016	129.9	703	
East: PR-3 Este												
1 L	111			111	13	2000	13		0.756	94.0	270*	160
2 T		622		622	2	2000	49		0.834	48.5	1033	
3 T		622		622	2	2000	49		0.834	48.5	1033	
4 R			50	50	8	2000	49	74	0.038	9.4	5	160
	111	1243	50	1404	3				0.834	50.7	1033	
North: Rampa PR-53 Norte												
1 L	219			219	2	2000	28		0.540	61.0	388	
2 LT	127	86		213	7	2000	28		0.540	57.6	394	
3 R			609	609	2	2000	129		0.364	9.2		60
	346	86	609	1041	3				0.540	30.0	394	

ALL VEHICLES	Total Flow	% HV	Cycle Time	Max X	Aver. Delay	Max Queue
	4422	4	129	1.017	64.3	1033

Total flow period = 60 minutes. Peak flow period = 15 minutes.

Queue values in this table are 95% back of queue (feet).

Note: Basic Saturation Flows (in through car units) have been adjusted for grade, lane widths, parking manoeuvres and bus stops.

* Queue length exceeds short lane length due to specification of a percentile queue in the aaSIDRA Configuration File. For calculation of this statistic, you may specify the lane with full length.

Sea View II
InT. PR-3, Rampa PR-53 & Villas de Humacao, Hora Pico AM, 2011 Con Proyecto
Intersection ID: 4
Actuated Isolated Signals, Cycle Time = 129
Flow Scale = 103%

Table S.15 - CAPACITY AND LEVEL OF SERVICE

Mov No.	Mov Typ	Green Ratio 1st grn	Green Ratio 2nd grn	Time (g/C)	Total Flow (veh /h)	Total Cap. (veh /h)	Deg. of Satn (v/c)	Aver. Delay (sec)	LOS
West: PR-3 Oeste									
11	T	0.256*			918	969	0.948	81.4	F
					918	969	0.948	81.4	F

SouthWest: PR-3 Oeste							
52 L		0.155		275	283	0.970	114.0	F
53 R	(Un2)	0.155*	0.698	220	1057	0.208	12.4	B
				495	1341	0.970	68.9	E
South: Villas de Humacao Sur								
32 L		0.155*		416	409	1.016	130.1	F
33 TR	(Un1)	0.155		148	146	1.017*	129.4	F
				564	555	1.017	129.9	F
East: PR-3 Este								
22 L		0.101*		111	147<	0.756	94.0	F
21 T		0.380		1243	1491	0.834	48.5	D
23 R	(Und)	0.380	0.574	50	1302<	0.038	9.4	A
				1404	2940	0.834	50.7	D
North: Rampa PR-53 Norte								
42 L		0.217		346	641	0.540	61.0	E
41 T		0.217*		86	159	0.540	52.0	D
43 R	(Con)	1.000		609	1675	0.364	9.2	B#
				1041	2475	0.540	30.0	C
ALL VEHICLES:				4422	8279	1.017	64.3	E
INTERSECTION (persons):				5306	8279	1.017	64.3	

Level of Service calculations are based on
average control delay including geometric delay (HCM criteria),
independent of the current delay definition used.
For the criteria, refer to the "Level of Service" topic in the
aaSIDRA Output Guide or the Output section of the on-line help.

\# Level Of Service for continuous movements based on density
< Reduced capacity due to a short lane effect
* Maximum v/c ratio, or critical green periods

Sea View II
InT. PR-3, Rampa PR-53 & Villas de Humacao, Hora Pico AM, 2011 Con Proyecto
Intersection ID: 4

Table S.23 - SENSITIVITY ANALYSIS RESULTS

Performance Measure	Smallest Value	Param Scale
Degree of Satn	1.002	60
Average Delay	64.3	65
Stop Rate	0.83	120
Max. Queue for Any Movement	40.1	75
Perf. Index	307.0	60

Cost total	1393.0	65

Performance Measure	Largest Value	Param Scale
Total Vehicle Cap.	8545	105
Prac. Spare Cap.	-10	60

Sea View II
InT. PR-3, Rampa PR-53 & Villas de Humacao, Hora Pico AM, 2011 Con Proyecto
Intersection ID: 4
Actuated Isolated Signals, Cycle Time = 129
Flow Scale = 103%

Table D.5 - PROGRESSION FACTORS & ACTUATED SIGNAL PARAMETERS

Mov No.	Control	Coord.	Arrival Type	Delay Prog. Factor	Queue Prog. Factor	Gap Settings es	Gap Settings eh	Disp. Grn. Settings 1st Grn Gmin	1st Grn Gmax	2nd Grn Gmin	2nd Grn Gmax
West: PR-3 Oeste											
11	VA	No	3	1.000	1.000	2.5	3.1	5	33		
SouthWest: PR-3 Oeste											
52	VA	No	3	1.000	1.000	2.0	2.6	20	16		
53	VA	No	3	1.000	1.000	2.5	3.1	20	16	6	33
South: Villas de Humacao Sur											
32	VA	No	3	1.000	1.000	2.0	2.6	20	16		
33	VA	No	3	1.000	1.000	2.5	3.1	20	16		
East: PR-3 Este											
22	VA	No	3	1.000	1.000	2.0	2.6	5	13		
21	VA	No	3	1.000	1.000	2.5	3.1	5	33		
23	VA	No	3	1.000	1.000	2.5	3.1	5	33	6	33
North: Rampa PR-53 Norte											
42	VA	No	3	1.000	1.000	2.0	2.6	5	13		
41	VA	No	3	1.000	1.000	2.5	3.1	5	33		
43	VA	No	3	1.000	1.000	2.5	3.1	6	33		

Sea View II
InT. PR-3, Rampa PR-53 & Villas de Humacao, Hora Pico AM, 2011 Con Proyecto
Intersection ID: 4

Scaled sensitivity parameter: Maximum Green

Table V.23 - INTERSECTION SUMMARY FOR VARIABLE PARAMETER SCALE

Param Scale (%)	Cycle Time (sec)	Total Veh. Cap.	Intersn Deg. of Satn	Prac. Spare Cap.	Aver. Delay (sec)	Stop Rate	Longest Queue (veh)	Perf. Index	Cost Total $/h

50	115	8046	1.115	-19	72.3	0.99	43.3	318.0	1504.4
55	121	8145	1.048	-14	68.1	0.95	42.3	312.1	1447.6
60	124	8215	1.002	-10	65.3	0.92	41.2	307.0	1409.1
65	129	8279	1.017	-11	64.3	0.90	40.7	307.0	1393.0
70	133	8325	1.048	-14	65.2	0.88	40.7	310.8	1401.1
75	137	8399	1.080	-17	65.4	0.87	40.1	312.2	1399.0
80	141	8439	1.111	-19	67.4	0.86	40.2	318.5	1422.4
85	148	8479	1.111	-19	68.5	0.86	41.3	325.3	1434.9
90	157	8469	1.076	-16	69.3	0.85	43.8	334.1	1442.7
95	164	8503	1.077	-16	70.3	0.85	44.8	340.6	1453.5
100	170	8516	1.072	-16	71.3	0.84	45.9	346.7	1463.9
105	177	8545	1.073	-16	72.4	0.84	47.0	353.5	1476.6
110	185	8539	1.041	-14	72.9	0.83	49.0	360.8	1481.1
115	189	8516	1.027	-12	73.9	0.83	50.4	366.6	1492.1
120	195	8528	1.024	-12	75.1	0.83	51.7	373.5	1506.5

--- End of aaSIDRA Output ---

Akcelik & Associates Pty Ltd - aaSIDRA 2.0.0.205

Servicios Técnicos Integrados
Francisco J. Reyes Registered User No. 50310
Licence Type: Professional, Single Computer

Time and Date of Analysis 3:09 PM, May 4,2009

Filename: F:\My Documents\Francisco\Consultores\April\Humacao\Sea View II\Sidra\53-VH-3-11PMP.OUT

Sea View II
InT. PR-3, Rampa PR-53 & Villas de Humacao, Hora Pico PM, 2011 Con Proyecto
Intersection ID: 4

aaTraffic SIDRA US Highway Capacity Manual (2000) Version

RUN INFORMATION

Parameter sensitivity run: "Optimum" Maximum Green = 80.0 %

* Basic Parameters:
  Intersection Type: Signalised - Actuated Isolated
  For fully-actuated signal timings, the following specifications will be ignored:
    Any maximum cycle time specification
    Any user-given cycle time (unless phase times also given)
    User-given cycle and phase times (if variable flow scale run)
    Any variable cycle time specification
    Any green split priority specification
  Driving on the right-hand side of the road
  Input data specified in US units
  Default Values File No. 11
  Peak flow period (for performance): 15 minutes
  Unit time (for volumes): 60 minutes (Total Flow Period)
  Delay definition: Control delay
                Geometric delay included
  HCM Delay and Queue Models option selected
  Level of Service based on: Delay (HCM method)
  Queue definition: Back of queue, 95th Percentile

* No. of Main (Timing-Capacity) Iterations = 3
  Comparison of last two iterations:
    Difference in intersection degree of satn = 0.7 %
    Difference in total vehicle capacity = 0.1 %
    Largest difference in eff. green times = 1 secs
    (max. value for stopping = 1 secs)
  Information on Previous Iteration:
    Cycle Time = 141
    Phase Times: 0, 23, 42, 85, 118
    Critical Movements: 53(1st), 22, 11, 41, 32

InT. PR-3, Rampa PR-53 & Villas de Humacao, Hora Pico PM, 2011 Con Proyecto
Intersection ID: 4
Actuated Isolated Signals, Cycle Time = 140
Flow Scale = 103%

Table S.3 - INTERSECTION PARAMETERS

Critical Movements: 53(1st), 22, 11, 41, 32

L= 111 Y= 0.113 U= 0.207 T= 140.0

Cycle Time:

Minimum	Maximum	Practical	Chosen
70	NA	140	140

Intersection Level of Service	=	E
Worst movement Level of Service	=	F
Average intersection delay (s)	=	61.0
Largest average movement delay (s)	=	157.3
Largest back of queue, 95% (ft)	=	1150
Performance Index	=	295.88
Degree of saturation (highest)	=	1.091
Practical Spare Capacity (lowest)	=	-18 %
Total vehicle capacity, all lanes (veh/h)	=	8520
Total vehicle flow (veh/h)	=	4254
Total person flow (pers/h)	=	5105
Total vehicle delay (veh-h/h)	=	72.03
Total person delay (pers-h/h)	=	86.43
Total effective vehicle stops (veh/h)	=	3670
Total effective person stops (pers/h)	=	4404
Total vehicle travel (veh-mi/h)	=	1772.2
Total cost ($/h)	=	1284.66
Total fuel (ga/h)	=	115.4
Total CO2 (kg/h)	=	1093.25

Sea View II
InT. PR-3, Rampa PR-53 & Villas de Humacao, Hora Pico PM, 2011 Con Proyecto
Intersection ID: 4
Actuated Isolated Signals, Cycle Time = 140
Flow Scale = 103%

Table S.4 - PHASE INFORMATION

Phase Change Times: 0, 23, 42, 85, 117
Phase Green Times: 20, 16, 40, 29, 20

Current Phase Sequence No.: 1
Input phase sequence: A B C D E
Output phase sequence: A B C D E

Sea View II
InT. PR-3, Rampa PR-53 & Villas de Humacao, Hora Pico PM, 2011 Con Proyecto
Intersection ID: 4
Actuated Isolated Signals, Cycle Time = 140
Flow Scale = 103%

Table S.6 - INTERSECTION PERFORMANCE

Total Flow (veh/h)	Deg. Satn x	Total Delay (veh-h/h)	Total Delay (pers-h/h)	Aver. Delay (sec)	Prop. Queued	Eff. Stop Rate	Longest Queue (ft)	Perf. Index	Aver. Speed (mph)
INTERSECTION (persons):									
5105	1.091		86.43	61.0	0.779	0.86		295.88	24.5

Queue values in this table are 95% back of queue (feet).

Sea View II
InT. PR-3, Rampa PR-53 & Villas de Humacao, Hora Pico PM, 2011 Con Proyecto
Intersection ID: 4
Actuated Isolated Signals, Cycle Time = 140
Flow Scale = 103%

Table S.7 - LANE PERFORMANCE

Lane No.	Mov No.	Effective Green Times (sec) R1	G1	R2	G2	Dem Flow (veh /h)	Cap (veh /h)	Deg. Satn x	Aver. Delay (sec)	Eff. Stop Rate	Queue 95% Back (vehs)	Queue 95% Back (ft)	Shrt Lane (ft)
West: PR-3 Oeste													
1 T	11	100	40	0	0	542	561	0.966	84.7	1.04	45.3	1150	
2 T	11	100	40	0	0	542	561	0.966	84.7	1.04	45.3	1150	
SouthWest: PR-3 Oeste													
1 L	52	120	20	0	0	288	264	1.091	157.3	1.13	30.9	792	
2 R	53	3	20	15	102	294	1083	0.271	12.1	0.76	4.3	108	
South: Villas de Humacao Sur													
1 L	32	120	20	0	0	194	262	0.741	85.6	0.83	16.8	432	
2 LTR	32, 33	120	20	0	0	187	252	0.741	83.7	0.83	16.2	418	
East: PR-3 Este													
1 L	22	124	16	0	0	75	135	0.555	80.4	0.77	6.6*	189	160
2 T	21	81	59	0	0	604	830	0.728	40.6	0.79	38.1	965	
3 T	21	81	59	0	0	604	830	0.728	40.6	0.79	38.1	965	
4 R	23	3	59	3	75	98	1319	0.074	9.4	0.65	0.4	10	160
North: Rampa PR-53 Norte													
1 L	42	111	29	0	0	205	376	0.547	66.7	0.82	15.6	408	
2 LT	42, 41	111	29	0	0	204	372	0.547	63.0	0.80	15.5	414	
3 R	43	0	140	0	0	417	1675	0.249	9.2	0.65	10.6#		60

\# Density (passenger cars per km or mile)
* Queue length exceeds short lane length due to specification of a percentile queue in the aaSIDRA Configuration File. For calculation of this statistic, you may specify the lane with full length.

Sea View II
InT. PR-3, Rampa PR-53 & Villas de Humacao, Hora Pico PM, 2011 Con Proyecto
Intersection ID: 4
Actuated Isolated Signals, Cycle Time = 140
Flow Scale = 103%

Table S.10 - MOVEMENT CAPACITY AND PERFORMANCE SUMMARY

Mov No.	Mov Typ	Dem Flow (veh /h)	Total Cap. (veh /h)	Lane Util (%)	Deg. Satn x	Eff. Grn 1st Grn	Eff. Grn 2nd Grn	Aver. Delay (sec)	Eff. Stop Rate	95% Back of Queue (veh)	Perf. Index
West: PR-3 Oeste											
11	T	1084	1122	100	0.966	40*		84.7	1.04	45.3	98.74
SouthWest: PR-3 Oeste											
52	L	288	264	100	1.091*	20		157.3	1.13	30.9	35.32
53	R (Un2)	294	1083	100	0.271	20*	102	12.1	0.76	4.3	7.41
South: Villas de Humacao Sur											
32	L	230	310	100	0.741	20*		85.6	0.83	16.8	19.58
33	TR (Un1)	151	204	100	0.741	20		83.1	0.83	16.2	12.77
East: PR-3 Este											
22	L	75	135<	100	0.555	16*		80.4	0.77	6.6	6.10
21	T	1208	1660	100	0.728	59		40.6	0.79	38.1	77.22
23	R (Und)	98	1319<	100	0.074	59	75	9.4	0.65	0.4	1.81
North: Rampa PR-53 Norte											
42	L	321	587	100	0.547	29		66.7	0.82	15.6	23.77
41	T	88	161	100	0.547	29*		57.6	0.77	15.5	6.27
43	R (Con)	417	1675	100	0.249	140		9.2	0.65	10.6 #	6.90

< Reduced capacity due to a short lane effect
* Maximum degree of saturation, or critical green periods
# Largest density (passenger cars per km or mile) for any lane

---

Sea View II
InT. PR-3, Rampa PR-53 & Villas de Humacao, Hora Pico PM, 2011 Con Proyecto
Intersection ID: 4
Actuated Isolated Signals, Cycle Time = 140
Flow Scale = 103%

Table S.14 - SUMMARY OF INPUT AND OUTPUT DATA

Lane No.	Demand Flow (veh/h) L	T	R	Tot	%HV	Adj. Basic Satf.	Eff Grn (secs) 1st	2nd	Deg Sat x	Aver. Delay (sec)	Longest Queue (ft)	Shrt Lane (ft)
West: PR-3 Oeste												
1	T	542		542	2	2000	40		0.966	84.7	1150	
2	T	542		542	2	2000	40		0.966	84.7	1150	
	.0	1084	0	1084	2				0.966	84.7	1150	

SouthWest: PR-3 Oeste												
1 L	288			288	3	2000	20		1.091	157.3	792	
2 R			294	294	2	2000	20	102	0.271	12.1	108	
	288	0	294	582	2				1.091	83.9	792	
South: Villas de Humacao Sur												
1 L	194			194	4	2000	20		0.741	85.6	432	
2 LTR	36	57	94	187	4	2000	20		0.741	83.7	418	
	230	57	94	381	4				0.741	84.7	432	
East: PR-3 Este												
1 L	75			75	17	2000	16		0.555	80.4	189*	160
2 T		604		604	2	2000	59		0.728	40.6	965	
3 T		604		604	2	2000	59		0.728	40.6	965	
4 R			98	98	6	2000	59	75	0.074	9.4	10	160
	75	1208	98	1381	3				0.728	40.6	965	
North: Rampa PR-53 Norte												
1 L	205			205	5	2000	29		0.547	66.7	408	
2 LT	116	88		204	8	2000	29		0.547	63.0	414	
3 R			417	417	2	2000	140		0.249	9.2		60
	321	88	417	826	4				0.547	36.8	414	

ALL VEHICLES	Total Flow	% HV	Cycle Time	Max X	Aver. Delay	Max Queue
	4254	3	140	1.091	61.0	1150

Total flow period = 60 minutes. Peak flow period = 15 minutes.

Queue values in this table are 95% back of queue (feet).

Note: Basic Saturation Flows (in through car units) have been adjusted for grade, lane widths, parking manoeuvres and bus stops.

* Queue length exceeds short lane length due to specification of a percentile queue in the aaSIDRA Configuration File. For calculation of this statistic, you may specify the lane with full length.

Sea View II
InT. PR-3, Rampa PR-53 & Villas de Humacao, Hora Pico PM, 2011 Con Proyecto
Intersection ID: 4
Actuated Isolated Signals, Cycle Time = 140
Flow Scale = 103%

Table S.15 - CAPACITY AND LEVEL OF SERVICE

Mov No.	Mov Typ	Green Ratio (g/C) 1st grn	Green Ratio (g/C) 2nd grn	Total Flow (veh /h)	Total Cap. (veh /h)	Deg. of Satn (v/c)	Aver. Delay (sec)	LOS

West: PR-3 Oeste							
11 T		0.286*		1084	1122	0.966	84.7	F
				1084	1122	0.966	84.7	F
SouthWest: PR-3 Oeste							
52 L		0.143		288	264	1.091*	157.3	F
53 R	(Un2)	0.143*	0.729	294	1083	0.271	12.1	B
				582	1347	1.091	83.9	F
South: Villas de Humacao Sur							
32 L		0.143*		230	310	0.741	85.6	F
33 TR	(Un1)	0.143		151	204	0.741	83.1	F
				381	514	0.741	84.6	F
East: PR-3 Este							
22 L		0.114*		75	135<	0.555	80.4	F
21 T		0.421		1208	1660	0.728	40.6	D
23 R	(Und)	0.421	0.536	98	1319<	0.074	9.4	A
				1381	3114	0.728	40.6	D
North: Rampa PR-53 Norte							
42 L		0.207		321	587	0.547	66.7	E
41 T		0.207*		88	161	0.547	57.6	E
43 R	(Con)	1.000		417	1675	0.249	9.2	A#
				826	2423	0.547	36.7	D
ALL VEHICLES:				4254	8520	1.091	61.0	E
INTERSECTION (persons):				5105	8520	1.091	61.0	

Level of Service calculations are based on
average control delay including geometric delay (HCM criteria),
independent of the current delay definition used.
For the criteria, refer to the "Level of Service" topic in the
aaSIDRA Output Guide or the Output section of the on-line help.

\# Level Of Service for continuous movements based on density
< Reduced capacity due to a short lane effect
* Maximum v/c ratio, or critical green periods

Sea View II
InT. PR-3, Rampa PR-53 & Villas de Humacao, Hora Pico PM, 2011 Con Proyecto
Intersection ID: 4

Table S.23 - SENSITIVITY ANALYSIS RESULTS

Performance Measure	Smallest Value	Param Scale
Degree of Satn	1.029	120

Average Delay	61.0	80
Stop Rate	0.83	120
Max. Queue for Any Movement	45.3	80
Perf. Index	295.9	80
Cost total	1284.7	80

Performance Measure	Largest Value	Param Scale
Total Vehicle Cap.	8655	120
Prac. Spare Cap.	-13	120

Sea View II
InT. PR-3, Rampa PR-53 & Villas de Humacao, Hora Pico PM, 2011 Con Proyecto
Intersection ID: 4
Actuated Isolated Signals, Cycle Time = 140
Flow Scale = 103%

Table D.5 - PROGRESSION FACTORS & ACTUATED SIGNAL PARAMETERS

Mov No.	Control	Coord.	Arrival Type	Delay Prog. Factor	Queue Prog. Factor	Gap Settings es	Gap Settings eh	Disp. Grn. Settings 1st Grn Gmin	Disp. Grn. Settings 1st Grn Gmax	Disp. Grn. Settings 2nd Grn Gmin	Disp. Grn. Settings 2nd Grn Gmax
West: PR-3 Oeste											
11	VA	No	3	1.000	1.000	2.5	3.1	5	40		
SouthWest: PR-3 Oeste											
52	VA	No	3	1.000	1.000	2.0	2.6	20	20		
53	VA	No	3	1.000	1.000	2.5	3.1	20	20	6	40
South: Villas de Humacao Sur											
32	VA	No	3	1.000	1.000	2.0	2.6	20	20		
33	VA	No	3	1.000	1.000	2.5	3.1	20	20		
East: PR-3 Este											
22	VA	No	3	1.000	1.000	2.0	2.6	5	16		
21	VA	No	3	1.000	1.000	2.5	3.1	5	40		
23	VA	No	3	1.000	1.000	2.5	3.1	5	40	6	40
North: Rampa PR-53 Norte											
42	VA	No	3	1.000	1.000	2.0	2.6	5	16		
41	VA	No	3	1.000	1.000	2.5	3.1	5	40		
43	VA	No	3	1.000	1.000	2.5	3.1	6	40		

Sea View II
InT. PR-3, Rampa PR-53 & Villas de Humacao, Hora Pico PM, 2011 Con Proyecto
Intersection ID: 4

Scaled sensitivity parameter: Maximum Green

Table V.23 - INTERSECTION SUMMARY FOR VARIABLE PARAMETER SCALE

Param Scale (%)	Cycle Time (sec)	Total Veh. Cap.	Intersn Deg. of Satn	Prac. Spare Cap.	Aver. Delay (sec)	Stop Rate	Longest Queue (veh)	Perf. Index	Cost Total $/h
50	115	8110	1.269	-29	85.5	1.05	55.9	334.0	1590.2
55	120	8215	1.183	-24	75.6	0.99	52.4	316.9	1470.9
60	124	8282	1.141	-21	71.8	0.97	50.9	311.3	1424.0
65	128	8355	1.070	-16	65.5	0.92	47.9	299.9	1346.3
70	132	8403	1.041	-14	64.2	0.90	47.3	299.1	1327.5
75	137	8473	1.068	-16	62.3	0.88	46.2	297.5	1301.6
80	140	8520	1.091	-18	61.0	0.86	45.3	295.9	1284.7
85	148	8555	1.098	-18	62.1	0.85	46.4	303.4	1295.6
90	156	8551	1.057	-15	63.8	0.85	48.6	313.1	1314.6
95	163	8587	1.058	-15	64.2	0.84	49.2	318.2	1317.3
100	169	8600	1.054	-15	65.4	0.84	50.4	324.6	1329.6
105	176	8631	1.055	-15	66.1	0.83	51.2	330.4	1336.5
110	185	8619	1.030	-13	69.0	0.83	53.9	343.3	1368.5
115	192	8646	1.032	-13	69.9	0.83	54.7	349.3	1376.8
120	198	8655	1.029	-13	71.2	0.83	55.9	356.2	1391.4

--- End of aaSIDRA Output ---

Akcelik & Associates Pty Ltd - aaSIDRA 2.0.0.205

Servicios Técnicos Integrados
Francisco J. Reyes Registered User No. 50310
Licence Type: Professional, Single Computer

Time and Date of Analysis 7:40 PM, May 4,2009

Filename: F:\My Documents\Francisco\Consultores\April\Humacao\Sea View II\Sidra\925-3-11AMP.OUT

Sea View II
Intersecci?n PR-925 & PR-3; Hora Pico AM, 2011 Con Proyecto
Intersection ID: 1

aaTraffic SIDRA US Highway Capacity Manual (2000) Version

RUN INFORMATION
---

* Basic Parameters:
  Intersection Type: Unsignalised - Two-Way Stop Control
  Driving on the right-hand side of the road
  Input data specified in US units
  Default Values File No. 11
  Peak flow period (for performance): 15 minutes
  Unit time (for volumes): 60 minutes (Total Flow Period)
  Delay definition: Control delay
  Geometric delay included
  HCM Delay and Queue Models option selected
  Level of Service based on: Delay (HCM method)
  Queue definition: Back of queue, 95th Percentile

Sea View II
Intersecci?n PR-925 & PR-3; Hora Pico AM, 2011 Con Proyecto
Intersection ID: 1
Stop Sign Controlled Intersection
Flow Scale = 103%

Table S.3 - INTERSECTION PARAMETERS

Intersection Level of Service	=	B
Worst movement Level of Service	=	D
Average intersection delay (s)	=	11.3
Largest average movement delay (s)	=	26.8
Largest back of queue, 95% (ft)	=	323
Performance Index	=	39.14
Degree of saturation (highest)	=	0.424
Practical Spare Capacity (lowest)	=	89 %
Total vehicle capacity, all lanes (veh/h)	=	6703
Total vehicle flow (veh/h)	=	2101
Total person flow (pers/h)	=	2521
Total vehicle delay (veh-h/h)	=	6.59
Total person delay (pers-h/h)	=	7.91

Total effective vehicle stops (veh/h)	=	822
Total effective person stops (pers/h)	=	986
Total vehicle travel (veh-mi/h)	=	916.4
Total cost ($/h)	=	378.61
Total fuel (ga/h)	=	47.0
Total CO2 (kg/h)	=	445.17

Sea View II
Intersecci?n PR-925 & PR-3; Hora Pico AM, 2011 Con Proyecto
Intersection ID: 1
Stop Sign Controlled Intersection
Flow Scale = 103%

Table S.6 - INTERSECTION PERFORMANCE

Total Flow (veh/h)	Deg. Satn x	Total Delay (veh-h/h)	Total Delay (pers-h/h)	Aver. Delay (sec)	Prop. Queued	Eff. Stop Rate	Longest Queue (ft)	Perf. Index	Aver. Speed (mph)
INTERSECTION (persons):									
2521	0.424		7.91	11.3	0.503	0.39		39.14	52.0

Queue values in this table are 95% back of queue (feet).

Sea View II
Intersecci?n PR-925 & PR-3; Hora Pico AM, 2011 Con Proyecto
Intersection ID: 1
Stop Sign Controlled Intersection
Flow Scale = 103%

Table S.7 - LANE PERFORMANCE

Lane No.	Mov No.	Dem Flow (veh /h)	Cap (veh /h)	Deg. Satn x	Aver. Delay (sec)	Eff. Stop Rate	Queue 95% Back (vehs)	Queue 95% Back (ft)	Short Lane (ft)
West: PR-3 Oeste									
1 L	12	124	312	0.397	25.4	1.01	2.4	61	200
2 LT	12, 11	547	1377	0.397	21.5	0.08	12.5	323	
East: PR-3 Este									
1 T	22	692	1970	0.351	0.0	0.00	0.0	0	
2 TR	22, 23	182	1731	0.105	4.3	0.29	0.0	0	200
North: PR-925 Norte									
1 LR	42, 43	215	507	0.424	17.2	1.08	2.9	74	
2 R	43	341	805	0.424	12.7	1.08	3.2	82	

Sea View II

Intersecci?n PR-925 & PR-3; Hora Pico AM, 2011 Con Proyecto
Intersection ID: 1
Stop Sign Controlled Intersection
Flow Scale = 103%

Table S.10 - MOVEMENT CAPACITY AND PERFORMANCE SUMMARY

Mov No.	Mov Typ	Dem Flow (veh /h)	Total Cap. (veh /h)	Lane Util (%)	Deg. Satn x	Aver. Delay (sec)	Eff. Stop Rate	95% Back of Queue (veh)	Perf. Index
West: PR-3 Oeste									
12	L	162	408	100	0.397	26.8	1.04	12.5	4.75
11	T	509	1282	100	0.397	20.8	0.00	12.5	12.50
East: PR-3 Este									
22	T	801	2282	30	0.351	0.0	0.00	0.0	7.80
23	R	73	693	30	0.105	10.8	0.74	0.0	1.22
North: PR-925 Norte									
42	L	172	406	100	0.424*	17.2	1.08	2.9	4.25
43	R	384	906	100	0.424*	13.2	1.08	3.2	8.61

* Maximum degree of saturation

Sea View II
Intersecci?n PR-925 & PR-3; Hora Pico AM, 2011 Con Proyecto
Intersection ID: 1
Stop Sign Controlled Intersection
Flow Scale = 103%

Table S.14 - SUMMARY OF INPUT AND OUTPUT DATA

Lane No.	Demand Flow (veh/h) L	T	R	Tot	%HV	Adj. Basic Satf.	Eff Grn (secs) 1st	2nd	Deg Sat x	Aver. Delay (sec)	Longest Queue (ft)	Shrt Lane (ft)
West: PR-3 Oeste												
1 L	124			124	4				0.397	25.4	61	200
2 LT	38	509		547	4				0.397	21.5	323	
	162	509	0	671	4				0.397	22.2	323	200d
East: PR-3 Este												
1 T		692		692	1				0.351	0.0	0	
2 TR		109	73	182	3				0.105	4.3	0	200U
	0	801	73	874	2				0.351	0.9		200d
North: PR-925 Norte												
1 LR	172		43	215	3				0.424	17.2	74	
2 R			341	341	3				0.424	12.7	82	
	172	0	384	556	3				0.424	14.5	82	

ALL VEHICLES	Total Flow	% HV	Max X	Aver. Delay	Max Queue
	2101	3	0.424	11.3	323

Total flow period = 60 minutes. Peak flow period = 15 minutes.

Queue values in this table are 95% back of queue (feet).

Note: Basic Saturation Flows are not adjusted at roundabouts or sign-controlled intersections and apply only to continuous lanes.

d Short lane length on departure side.

U Lane under-utilisation specified by the "User". This includes under-utilisation due to the specification of a downstream short lane.

Sea View II
Intersecci?n PR-925 & PR-3; Hora Pico AM, 2011 Con Proyecto
Intersection ID: 1
Stop Sign Controlled Intersection
Flow Scale = 103%

Table S.15 - CAPACITY AND LEVEL OF SERVICE

Mov No.	Mov Typ	Total Flow (veh /h)	Total Cap. (veh /h)	Deg. of Satn (v/c)	Aver. Delay (sec)	LOS
West: PR-3 Oeste						
12	L	162	408	0.397	26.8	D
11	T	509	1282	0.397	20.8	C
		671	1690	0.397	22.2	C
East: PR-3 Este						
22	T	801	2282	0.351	0.0	A
23	R	73	693	0.105	10.8	B
		874	2975	0.351	0.9	A
North: PR-925 Norte						
42	L	172	406	0.424*	17.2	C
43	R	384	906	0.424*	13.2	B
		556	1312	0.424	14.5	B
ALL VEHICLES:		2101	6703	0.424	11.3	B

Level of Service calculations are based on average control delay including geometric delay (HCM criteria), independent of the current delay definition used.
For the criteria, refer to the "Level of Service" topic in the aaSIDRA Output Guide or the Output section of the on-line help.

* Maximum v/c ratio, or critical green periods

Akcelik & Associates Pty Ltd - aaSIDRA 2.0.0.205

Servicios Técnicos Integrados
Francisco J. Reyes Registered User No. 50310
Licence Type: Professional, Single Computer

Time and Date of Analysis 4:08 PM, May 4,2009

Filename: F:\My Documents\Francisco\Consultores\April\Humacao\Sea View II\Sidra\925-3-11PMP.OUT

Sea View II
Intersecci?n PR-925 & PR-3; Hora Pico PM, 2011 Con Proyecto
Intersection ID: 1

aaTraffic SIDRA US Highway Capacity Manual (2000) Version

RUN INFORMATION

* Basic Parameters:
  Intersection Type: Unsignalised - Two-Way Stop Control
  Driving on the right-hand side of the road
  Input data specified in US units
  Default Values File No. 11
  Peak flow period (for performance): 15 minutes
  Unit time (for volumes): 60 minutes (Total Flow Period)
  Delay definition: Control delay
  Geometric delay included
  HCM Delay and Queue Models option selected
  Level of Service based on: Delay (HCM method)
  Queue definition: Back of queue, 95th Percentile

Sea View II
Intersecci?n PR-925 & PR-3; Hora Pico PM, 2011 Con Proyecto
Intersection ID: 1
Stop Sign Controlled Intersection
Flow Scale = 103%

Table S.3 - INTERSECTION PARAMETERS

Intersection Level of Service	=	B
Worst movement Level of Service	=	F
Average intersection delay (s)	=	13.3
Largest average movement delay (s)	=	129.6
Largest back of queue, 95% (ft)	=	235
Performance Index	=	38.40
Degree of saturation (highest)	=	0.916
Practical Spare Capacity (lowest)	=	-13 ?
Total vehicle capacity, all lanes (veh/h)	=	7159
Total vehicle flow (veh/h)	=	1968
Total person flow (pers/h)	=	2362
Total vehicle delay (veh-h/h)	=	7.25
Total person delay (pers-h/h)	=	8.69

Total effective vehicle stops (veh/h)	=	726
Total effective person stops (pers/h)	=	871
Total vehicle travel (veh-mi/h)	=	818.8
Total cost ($/h)	=	352.80
Total fuel (ga/h)	=	39.2
Total CO2 (kg/h)	=	371.91

Sea View II
Intersecci?n PR-925 & PR-3; Hora Pico PM, 2011 Con Proyecto
Intersection ID: 1
Stop Sign Controlled Intersection
Flow Scale = 103%

Table S.6 - INTERSECTION PERFORMANCE

Total Flow (veh/h)	Deg. Satn x	Total Delay (veh-h/h)	Total Delay (pers-h/h)	Aver. Delay (sec)	Prop. Queued	Eff. Stop Rate	Longest Queue (ft)	Perf. Index	Aver. Speed (mph)
INTERSECTION (persons):									
2362	0.916		8.69	13.3	0.473	0.37		38.40	46.3

Queue values in this table are 95% back of queue (feet).

Sea View II
Intersecci?n PR-925 & PR-3; Hora Pico PM, 2011 Con Proyecto
Intersection ID: 1
Stop Sign Controlled Intersection
Flow Scale = 103%

Table S.7 - LANE PERFORMANCE

Lane No.	Mov No.	Dem Flow (veh /h)	Cap (veh /h)	Deg. Satn x	Aver. Delay (sec)	Eff. Stop Rate	Queue 95% Back (vehs)	Queue 95% Back (ft)	Short Lane (ft)
West: PR-3 Oeste									
1 L	12	321	891	0.360	13.4	0.92	2.4	61	100
2 LT	12	695	1932	0.360	4.7	0.00	6.0	152	
East: PR-3 Este									
1 T	22	346	1949	0.178	0.0	0.00	0.0	0	
2 TR	22, 23	324	1821	0.178	4.0	0.30	0.0	0	200
North: PR-925 Norte									
1 L	42, 43	109	119	0.916	129.6	1.34	8.9	235	
2 R	43	173	447	0.387	18.0	1.08	3.0	77	

Sea View II
Intersecci?n PR-925 & PR-3; Hora Pico PM, 2011 Con Proyecto

Intersection ID: 1
Stop Sign Controlled Intersection
Flow Scale = 103%

Table S.10 - MOVEMENT CAPACITY AND PERFORMANCE SUMMARY

Mov No.	Mov Typ	Dem Flow (veh /h)	Total Cap. (veh /h)	Lane Util (%)	Deg. Satn x	Aver. Delay (sec)	Eff. Stop Rate	95% Back of Queue (veh)	Perf. Index
West: PR-3 Oeste									
12	LT	1016	2823	100	0.360	7.4	0.29	6.0	17.04
East: PR-3 Este									
22	T	536	3016	100	0.178	0.0	0.00	0.0	5.59
23	R	134	754	100	0.178	9.7	0.72	0.0	2.28
North: PR-925 Norte									
42	L	109	119	100	0.916*	129.6	1.34	8.9	8.84
43	R	173	447	42	0.387	18.0	1.08	3.0	4.65

* Maximum degree of saturation

Sea View II
Intersecci?n PR-925 & PR-3; Hora Pico PM, 2011 Con Proyecto
Intersection ID: 1
Stop Sign Controlled Intersection
Flow Scale = 103%

Table S.14 - SUMMARY OF INPUT AND OUTPUT DATA

Lane No.	Demand Flow (veh/h) L	T	R	Tot	%HV	Adj. Basic Satf.	Eff Grn (secs) 1st	2nd	Deg Sat x	Aver. Delay (sec)	Longest Queue (ft)	Shrt Lane (ft)
West: PR-3 Oeste												
1 L	321			321	2				0.360	13.4	61	100
2 LT	3	692		695	3				0.360	4.7	152	
	324	692	0	1016	3				0.360	7.4	152	
East: PR-3 Este												
1 T		346		346	3				0.178	0.0	0	
2 TR		190	134	324	3				0.178	4.0	0	200
	0	536	134	670	3				0.178	1.9		
North: PR-925 Norte												
1 L	109			109	7				0.916	129.6	235	
2 R			173	173	4				0.387	18.0	77	
	109	0	173	282	5				0.916	61.2	235	
ALL VEHICLES				Total	%				Max	Aver.	Max	

adjacent lane performance statistics. You may wish to change the short lane to a full lane to investigate the extent of this effect.

Sea View II
Int. PR-3, PR-925 & Rampa PR-53; Hora Pico PM, 2011 Sin Proyecto
Intersection ID: 5
Actuated Isolated Signals, Cycle Time = 113
Flow Scale = 103%

Table S.10 - MOVEMENT CAPACITY AND PERFORMANCE SUMMARY

Mov No.	Mov Typ	Dem Flow (veh /h)	Total Cap. (veh /h)	Lane Util (%)	Deg. Satn x	Eff. Grn 1st Grn	Eff. Grn 2nd Grn	Aver. Delay (sec)	Eff. Stop Rate	95% Back of Queue (veh)	Perf. Index
West: PR-3 Oeste											
12 L		187	187<	100	1.000*	20*		59.8	0.81	11.5	11.73
11 LT		1734E	1772	100	0.978	43		64.9	1.08	50.5	131.80
13 R		468E	478	100	0.978	43*	62	69.1	1.07	47.2	35.03
South: Ramp PR-53 Sur											
32 L		305	523	100	0.583	17*		62.5	0.81	11.2	20.21
31 T		26	45	100	0.581	88	17	50.4	0.78	11.0	1.62
33 R	(Con)	85	1633	100	0.052	113		9.3	0.65	2.2 #	1.41
East: PR-3 Este											
22 L		300	327	100	0.916	20		92.0	0.95	22.9	24.90
21 T		1397	2257	100	0.619	43		33.2	0.75	24.5	73.48
23 R	(Con)	218	1695	100	0.129	113		10.3	0.67	4.9 #	3.54
North: PR-925 Norte											
42 L		52	120	67	0.434	17		61.0	0.79	8.3	3.36
41 T		73	168	67	0.434	17		50.8	0.74	8.3	4.50
43 R	(Un2)	252	391<	100	0.645	17*	58	22.4	0.80	9.1	10.02

E "Excess" flow from the short lane of an adjacent movement added to normal flow
< Reduced capacity due to a short lane effect
* Maximum degree of saturation, or critical green periods
# Largest density (passenger cars per km or mile) for any lane

---

Sea View II
Int. PR-3, PR-925 & Rampa PR-53; Hora Pico PM, 2011 Sin Proyecto
Intersection ID: 5
Actuated Isolated Signals, Cycle Time = 113
Flow Scale = 103%

Table S.14 - SUMMARY OF INPUT AND OUTPUT DATA

Lane No.	Demand Flow (veh/h) L	T	R	Tot	%HV	Adj. Basic Satf.	Eff Grn (secs) 1st	2nd	Deg Sat x	Aver. Delay (sec)	Longest Queue (ft)	Shrt Lane (ft)
West: PR-3 Oeste												

	Flow	HV	X	Delay	Queue
	1968	3	0.916	13.3	235

Total flow period = 60 minutes. Peak flow period = 15 minutes.

Queue values in this table are 95% back of queue (feet).

Note: Basic Saturation Flows are not adjusted at roundabouts or sign-controlled intersections and apply only to continuous lanes.

Sea View II
Intersecci?n PR-925 & PR-3; Hora Pico PM, 2011 Con Proyecto
Intersection ID: 1
Stop Sign Controlled Intersection
Flow Scale = 103%

Table S.15 - CAPACITY AND LEVEL OF SERVICE

Mov No.	Mov Typ	Total Flow (veh /h)	Total Cap. (veh /h)	Deg. of Satn (v/c)	Aver. Delay (sec)	LOS
West: PR-3 Oeste						
12	LT	1016	2823	0.360	7.4	A
		1016	2823	0.360	7.4	A
East: PR-3 Este						
22	T	536	3016	0.178	0.0	A
23	R	134	754	0.178	9.7	A
		670	3770	0.178	1.9	A
North: PR-925 Norte						
42	L	109	119	0.916*	129.6	F
43	R	173	447	0.387	18.0	C
		282	566	0.916	61.2	F
ALL VEHICLES:		1968	7159	0.916	13.3	B

Level of Service calculations are based on
average control delay including geometric delay (HCM criteria),
independent of the current delay definition used.
For the criteria, refer to the "Level of Service" topic in the
aaSIDRA Output Guide or the Output section of the on-line help.
* Maximum v/c ratio, or critical green periods

--- End of aaSIDRA Output ---

Akcelik & Associates Pty Ltd - aaSIDRA 2.0.0.205

Servicios Técnicos Integrados
Francisco J. Reyes Registered User No. 50310
Licence Type: Professional, Single Computer

Time and Date of Analysis 3:04 PM, May 4,2009

Filename: F:\My Documents\Francisco\Consultores\April\Humacao\Sea View II\Sidra\925-3-53-11AMP.OUT

Sea View II
Int. PR-3, PR-925 & Rampa PR-53; Hora Pico AM, 2011 Con Proyecto
Intersection ID: 5

aaTraffic SIDRA US Highway Capacity Manual (2000) Version

RUN INFORMATION

Parameter sensitivity run: "Optimum" Maximum Green = 65.0 %

* Basic Parameters:
  Intersection Type: Signalised - Actuated Isolated
  For fully-actuated signal timings, the following specifications will be ignored:
    Any maximum cycle time specification
    Any user-given cycle time (unless phase times also given)
    User-given cycle and phase times (if variable flow scale run)
    Any variable cycle time specification
    Any green split priority specification
  Driving on the right-hand side of the road
  Input data specified in US units
  Default Values File No. 11
  Peak flow period (for performance): 15 minutes
  Unit time (for volumes): 60 minutes (Total Flow Period)
  Delay definition: Control delay
                    Geometric delay included
  HCM Delay and Queue Models option selected
  Level of Service based on: Delay (HCM method)
  Queue definition: Back of queue, 95th Percentile

* No. of Main (Timing-Capacity) Iterations = 2
  Comparison of last two iterations:
    Difference in intersection degree of satn = 0.0 %
    Difference in total vehicle capacity = 0.0 %
    Largest difference in eff. green times = 0 secs
    (max. value for stopping = 0 secs)

* Movement 12 has large x because of short lanes.
  The degree of saturation of adjacent movement 11 is less than xp, hence this solution may be satisfactory.
  See Table S.7 for queue length, delay etc.

Sea View II
Int. PR-3, PR-925 & Rampa PR-53; Hora Pico AM, 2011 Con Proyecto
Intersection ID: 5
Actuated Isolated Signals, Cycle Time = 96
Flow Scale = 103%

Table S.3 - INTERSECTION PARAMETERS

Critical Movements: 22, 21, 42, 31

L= 94 Y= 0.000 U= 0.000 T= 94.0

Cycle Time:

Minimum	Maximum	Practical	Chosen
49	NA	95	96

Intersection Level of Service	=	D
Worst movement Level of Service	=	F
Average intersection delay (s)	=	51.9
Largest average movement delay (s)	=	297.2
Largest back of queue, 95% (ft)	=	2376
Performance Index	=	293.24
Degree of saturation (highest)	=	1.498
Practical Spare Capacity (lowest)	=	-40 %
Total vehicle capacity, all lanes (veh/h)	=	9115
Total vehicle flow (veh/h)	=	5230
Total person flow (pers/h)	=	6276
Total vehicle delay (veh-h/h)	=	75.40
Total person delay (pers-h/h)	=	90.49
Total effective vehicle stops (veh/h)	=	4350
Total effective person stops (pers/h)	=	5220
Total vehicle travel (veh-mi/h)	=	2134.2
Total cost ($/h)	=	1408.69
Total fuel (ga/h)	=	141.1
Total CO2 (kg/h)	=	1336.39

Sea View II
Int. PR-3, PR-925 & Rampa PR-53; Hora Pico AM, 2011 Con Proyecto
Intersection ID: 5
Actuated Isolated Signals, Cycle Time = 96
Flow Scale = 103%

Table S.4 - PHASE INFORMATION

Phase Change Times: 0, 19, 56, 76
Phase Green Times: 15, 33, 16, 16

Current Phase Sequence No.: 1
Input phase sequence: A B C D
Output phase sequence: A B C D

Sea View II
Int. PR-3, PR-925 & Rampa PR-53; Hora Pico AM, 2011 Con Proyecto
Intersection ID: 5
Actuated Isolated Signals, Cycle Time = 96

Flow Scale = 103%

Table S.6 - INTERSECTION PERFORMANCE

Total Flow (veh/h)	Deg. Satn x	Total Delay (veh-h/h)	Total Delay (pers-h/h)	Aver. Delay (sec)	Prop. Queued	Eff. Stop Rate	Longest Queue (ft)	Perf. Index	Aver. Speed (mph)
INTERSECTION (persons):									
6276	1.498		90.49	51.9	0.879	0.83		293.24	27.9

Queue values in this table are 95% back of queue (feet).

Sea View II
Int. PR-3, PR-925 & Rampa PR-53; Hora Pico AM, 2011 Con Proyecto
Intersection ID: 5
Actuated Isolated Signals, Cycle Time = 96
Flow Scale = 103%

Table S.7 - LANE PERFORMANCE

Lane No.	Mov No.	Effective Red and Green Times (sec) R1	G1	R2	G2	Dem Flow (veh /h)	Cap (veh /h)	Deg. Satn x	Aver. Delay (sec)	Eff. Stop Rate	Queue 95% Back (vehs)	Queue 95% Back (ft)	Shrt Lane (ft)
West: PR-3 Oeste													
1 L	12	81	15	0	0	222	222	1.000	55.3r	0.82	12.2*	308<	160
2 LT	11	63	33	0	0	451	664	0.679	33.2	0.79	22.1	568	
3 T	11	63	33	0	0	451	664	0.679	33.2	0.78	22.1	569	
4 TR	11, 13	43	33	17	3	446	657	0.679	33.8	0.83	20.4	519	
South: Ramp PR-53 Sur													
1 L	32	80	16	0	0	269	314	0.856	75.2	0.90	17.5	440	
2 LT	32, 31	80	16	0	0	271	316	0.856	73.8	0.90	17.6	443	
3 R	33	0	96	0	0	112	1679	0.067	9.2	0.65	2.8#		60
East: PR-3 Este													
1 L	22	81	15	0	0	319	289	1.106	141.8	1.20	27.3*	700<	400
2 LT	21	63	33	0	0	552	669	0.825	40.9	1.01	29.3	744	
3 T	21	63	33	0	0	558	676	0.825	40.8	0.88	29.6	749	
4 T	21	63	33	0	0	558	676	0.825	40.8	0.88	29.6	749	
5 R	23	0	96	0	0	267	1691	0.158	10.3	0.67	6.0#		400
North: PR-925 Norte													
1 LTR	42	80	16	0	0	472	315	1.499	297.3	1.20	55.0	2376	
2 TR	42, 43	80	16	0	0	282	282	1.000	57.2r	0.84	15.8*	398<	200

< Short lane capacity is reached and there is excess flow into an adjacent lane
Density (passenger cars per km or mile)
* Queue length exceeds short lane length due to specification of a

percentile queue in the aaSIDRA Configuration File. For calculation of this statistic, you may specify the lane with full length.

r Delay, stops and queue length for this lane have been cut down to fit in the queuing space. The amount cut may not be accounted for fully in the adjacent lane performance statistics. You may wish to change the short lane to a full lane to investigate the extent of this effect.

Sea View II
Int. PR-3, PR-925 & Rampa PR-53; Hora Pico AM, 2011 Con Proyecto
Intersection ID: 5
Actuated Isolated Signals, Cycle Time = 96
Flow Scale = 103%

Table S.10 - MOVEMENT CAPACITY AND PERFORMANCE SUMMARY

Mov No.	Mov Typ	Dem Flow (veh /h)	Total Cap. (veh /h)	Lane Util (%)	Deg. Satn x	Eff. Grn 1st Grn	Eff. Grn 2nd Grn	Aver. Delay (sec)	Eff. Stop Rate	95% Back of Queue (veh)	Perf. Index
West: PR-3 Oeste											
12	L	222	222<	100	1.000	15		55.3	0.82	12.2	12.89
11	LT	1164E	1714	100	0.679	33		32.3	0.79	22.1	57.99
13	R (Un2)	184E	271	100	0.679	33	42	40.0	0.88	20.4	9.33
South: Ramp PR-53 Sur											
32	L	498	582	100	0.856	16		75.2	0.90	17.6	35.12
31	T	42	49	100	0.857	16*		65.1	0.90	17.6	2.85
33	R (Con)	112	1679	100	0.067	96		9.2	0.65	2.8 #	1.85
East: PR-3 Este											
22	L	319	289	100	1.105	15*		141.8	1.20	27.3	33.36
21	LT	1668E	2022	100	0.825	33*		40.8	0.88	29.6	94.37
23	R (Con)	267	1691	100	0.158	96		10.3	0.67	6.0 #	4.34
North: PR-925 Norte											
42	L	137	315	67	1.498*	16*		297.2	1.93	55.0	24.17
43	TR (Un2)	282	283	67	1.000	16		57.2	0.84	15.8	16.97

E "Excess" flow from the short lane of an adjacent movement added to normal flow
< Reduced capacity due to a short lane effect
* Maximum degree of saturation, or critical green periods
# Largest density (passenger cars per km or mile) for any lane

---

Sea View II
Int. PR-3, PR-925 & Rampa PR-53; Hora Pico AM, 2011 Con Proyecto
Intersection ID: 5
Actuated Isolated Signals, Cycle Time = 96
Flow Scale = 103%

Table S.14 - SUMMARY OF INPUT AND OUTPUT DATA

Lane No.	Demand Flow (veh/h)	%HV	Adj. Basic	Eff Grn (secs)	Deg Sat	Aver. Delay	Longest Queue	Shrt Lane

	L	T	R	Tot		Satf.	1st	2nd	x	(sec)	(ft)	(ft)
West: PR-3 Oeste												
1 L	222			222	1	2000	15		1.000	55.3r	308*	160
2 LT	222	404		451	4	2000	33		0.679	33.2	568	
3 T		451		451	3	2000	33		0.679	33.2	569	
4 TR		262	184	446	2	2000	33	3	0.679	33.8	519	
	269	1117	184	1570	3				1.000	36.5	569	
South: Ramp PR-53 Sur												
1 L	269			269	1	2000	16		0.856	75.2	440	
2 LT	229	42		271	1	2000	16		0.856	73.8	443	
3 R			112	112	2	2000	96		0.067	9.2		60
	498	42	112	652	1				0.856	63.3	443	250d
East: PR-3 Este												
1 L	319			319	3	2000	15		1.106	141.8	700*	400
2 LT	319	457		552	3	2000	33		0.825	40.9	744	
3 T		558		558	2	2000	33		0.825	40.8	749	
4 T		558		558	2	2000	33		0.825	40.8	749	
5 R			267	267	1	2000	96		0.158	10.3		400
	414	1573	267	2254	2				1.106	51.5	749	
North: PR-925 Norte												
1 TR	137	0	282	282	1	2000	16		1.499	57.2	398	
2 TR		0	282	282	0	2000	16		1.000	57.2r	398*	200
	137	153	464	754	0				1.499	207.3	2376	250d

ALL VEHICLES	Total Flow	% HV	Cycle Time	Max X	Aver. Delay	Max Queue
	5230	2	96	1.498	51.9	2376

Total flow period = 60 minutes. Peak flow period = 15 minutes.

Queue values in this table are 95% back of queue (feet).

Note: Basic Saturation Flows (in through car units) have been adjusted for grade, lane widths, parking manoeuvres and bus stops.

* Queue length exceeds short lane length due to specification of a percentile queue in the aaSIDRA Configuration File. For calculation of this statistic, you may specify the lane with full length.

d Short lane length on departure side.

r Delay, stops and queue length for this lane have been cut down to fit in the queuing space. The amount cut may not be accounted for fully in the adjacent lane performance statistics. You may wish to change the short lane to a full lane to investigate the extent of this effect.

Sea View II
Int. PR-3, PR-925 & Rampa PR-53; Hora Pico AM, 2011 Con Proyecto

Intersection ID: 5

Actuated Isolated Signals, Cycle Time = 96

Flow Scale = 103%

Table S.15 - CAPACITY AND LEVEL OF SERVICE

Mov No.	Mov Typ	Green Ratio 1st grn	Time (g/C) 2nd grn	Total Flow (veh /h)	Total Cap. (veh /h)	Deg. of Satn (v/c)	Aver. Delay (sec)	LOS
West: PR-3 Oeste								
12	L	0.156		222	222<	1.000	55.3	E
11	LT	0.344		1164E	1714	0.679	32.3	C
13	R (Un2)	0.344	0.438	184E	271	0.679	40.0	D
				1570	2208	1.000	36.5	D
South: Ramp PR-53 Sur								
32	L	0.167		498	582	0.856	75.2	E
31	T	0.167*		42	49	0.857	65.1	E
33	R (Con)	1.000		112	1679	0.067	9.2	A#
				652	2310	0.857	63.2	E
East: PR-3 Este								
22	L	0.156*		319	289	1.105	141.8	F
21	LT	0.344*		1668E	2022	0.825	40.8	D
23	R (Con)	1.000		267	1691	0.158	10.3	A#
				2254	4001	1.105	51.5	D
North: PR-925 Norte								
42	L	0.167*		137	315	1.498*	297.2	F
43	TR (Un2)	0.167		282	283	1.000	57.2	E
				419	597	1.498	135.5	F
ALL VEHICLES:				5230	9115	1.498	51.9	D
INTERSECTION (persons):				6276	9115	1.498	51.9	

Level of Service calculations are based on
average control delay including geometric delay (HCM criteria),
independent of the current delay definition used.
For the criteria, refer to the "Level of Service" topic in the
aaSIDRA Output Guide or the Output section of the on-line help.

- # Level Of Service for continuous movements based on density
- < Reduced capacity due to a short lane effect
- * Maximum v/c ratio, or critical green periods
- E "Excess" flow from the short lane of an adjacent movement added to normal flow

Intersection ID: 5

Table S.23 - SENSITIVITY ANALYSIS RESULTS

Performance Measure	Smallest Value	Param Scale
Degree of Satn	1.483	70
Average Delay	51.9	65
Stop Rate	0.80	120
Max. Queue for Any Movement	55.0	65
Perf. Index	290.3	55
Cost total	1408.7	65

Performance Measure	Largest Value	Param Scale
Total Vehicle Cap.	9251	85
Prac. Spare Cap.	-39	70

Sea View II
Int. PR-3, PR-925 & Rampa PR-53; Hora Pico AM, 2011 Con Proyecto
Intersection ID: 5
Actuated Isolated Signals, Cycle Time = 96
Flow Scale = 103%

Table D.5 - PROGRESSION FACTORS & ACTUATED SIGNAL PARAMETERS

Mov No.	Control	Coord.	Arrival Type	Delay Prog. Factor	Queue Prog. Factor	Gap Settings es	Gap Settings eh	Disp. Grn. Settings 1st Grn Gmin	1st Grn Gmax	2nd Grn Gmin	2nd Grn Gmax
West: PR-3 Oeste											
12	VA	No	3	1.000	1.000	2.0	2.5	15	13		
11	VA	No	3	1.000	1.000	2.5	3.0	6	33		
13	VA	No	3	1.000	1.000	2.5	3.0	6	33	6	33
South: Ramp PR-53 Sur											
32	VA	No	3	1.000	1.000	2.0	2.5	6	16		
31	VA	No	3	1.000	1.000	2.5	3.0	6	16		
33	VA	No	3	1.000	1.000	2.5	3.1	6	33		
East: PR-3 Este											
22	VA	No	3	1.000	1.000	2.0	2.5	15	13		
21	VA	No	3	1.000	1.000	2.5	3.0	6	33		
23	VA	No	3	1.000	1.000	2.5	3.0	6	33		
North: PR-925 Norte											
42	VA	No	3	1.000	1.000	2.0	2.8	6	16		
43	VA	No	3	1.000	1.000	2.5	3.0	6	16		

Sea View II
Int. PR-3, PR-925 & Rampa PR-53; Hora Pico AM, 2011 Con Proyecto
Intersection ID: 5

Scaled sensitivity parameter: Maximum Green

Table V.23 - INTERSECTION SUMMARY FOR VARIABLE PARAMETER SCALE

Param Scale (%)	Cycle Time (sec)	Total Veh. Cap.	Intersn Deg. of Satn	Prac. Spare Cap.	Aver. Delay (sec)	Stop Rate	Longest Queue (veh)	Perf. Index	Cost Total $/h
50	82	8703	1.621	-44	55.8	0.89	57.7	292.0	1471.0
55	87	8878	1.584	-43	53.6	0.86	57.1	290.3	1436.9
60	91	8970	1.525	-41	52.5	0.85	55.2	291.0	1419.4
65	96	9115	1.498	-40	51.9	0.83	55.0	293.2	1408.7
70	102	9108	1.483	-39	52.7	0.83	58.1	300.6	1416.0
75	107	9218	1.502	-40	52.9	0.81	60.8	303.9	1414.0
80	112	9235	1.520	-41	53.6	0.81	63.5	309.9	1422.8
85	117	9251	1.536	-41	54.5	0.80	66.2	315.9	1432.1
90	124	9217	1.513	-41	55.9	0.80	67.9	326.4	1450.4
95	128	9186	1.511	-40	56.9	0.80	69.3	333.0	1463.6
100	132	9158	1.510	-40	58.0	0.80	70.8	339.7	1477.8
105	136	9131	1.509	-40	59.2	0.80	72.3	346.4	1492.2
110	143	9106	1.494	-40	60.8	0.80	74.2	357.1	1513.5
115	147	9082	1.494	-40	61.8	0.80	75.7	363.3	1526.4
120	151	9060	1.494	-40	62.8	0.80	77.1	369.5	1539.8

--- End of aaSIDRA Output ---

Akcelik & Associates Pty Ltd - aaSIDRA 2.0.0.205

Servicios Técnicos Integrados
Francisco J. Reyes Registered User No. 50310
Licence Type: Professional, Single Computer

Time and Date of Analysis 4:59 PM, May 4,2009

Filename: F:\My Documents\Francisco\Consultores\April\Humacao\Sea View II\Sidra\925-3-53-11PMP.OUT

Sea View II
Int. PR-3, PR-925 & Rampa PR-53; Hora Pico PM, 2011 Con Proyecto
Intersection ID: 5

aaTraffic SIDRA US Highway Capacity Manual (2000) Version

RUN INFORMATION

Parameter sensitivity run: "Optimum" Maximum Green = 95.0 %

* Basic Parameters:
  Intersection Type: Signalised - Actuated Isolated
  For fully-actuated signal timings, the following specifications will be ignored:
    Any maximum cycle time specification
    Any user-given cycle time (unless phase times also given)
    User-given cycle and phase times (if variable flow scale run)
    Any variable cycle time specification
    Any green split priority specification
  Driving on the right-hand side of the road
  Input data specified in US units
  Default Values File No. 11
  Peak flow period (for performance): 15 minutes
  Unit time (for volumes): 60 minutes (Total Flow Period)
  Delay definition: Control delay
                    Geometric delay included
  HCM Delay and Queue Models option selected
  Level of Service based on: Delay (HCM method)
  Queue definition: Back of queue, 95th Percentile

* No. of Main (Timing-Capacity) Iterations = 2
  Comparison of last two iterations:
    Difference in intersection degree of satn = 0.0 %
    Difference in total vehicle capacity = 0.0 %
    Largest difference in eff. green times = 0 secs
    (max. value for stopping = 0 secs)

Sea View II
Int. PR-3, PR-925 & Rampa PR-53; Hora Pico PM, 2011 Con Proyecto
Intersection ID: 5
Actuated Isolated Signals, Cycle Time = 122
Flow Scale = 103%

Table S.3 - INTERSECTION PARAMETERS

Critical Movements: 22, 13(1st), 43(1st), 32

L= 121 Y= 0.000 U= 0.000 T= 121.0

Cycle Time:

Minimum	Maximum	Practical	Chosen
54	NA	122	122

Intersection Level of Service	=	E
Worst movement Level of Service	=	F
Average intersection delay (s)	=	64.1
Largest average movement delay (s)	=	123.0
Largest back of queue, 95% (ft)	=	1629
Performance Index	=	395.53
Degree of saturation (highest)	=	1.047
Practical Spare Capacity (lowest)	=	-14 %
Total vehicle capacity, all lanes (veh/h)	=	9715
Total vehicle flow (veh/h)	=	5544
Total person flow (pers/h)	=	6653
Total vehicle delay (veh-h/h)	=	98.66
Total person delay (pers-h/h)	=	118.39
Total effective vehicle stops (veh/h)	=	5379
Total effective person stops (pers/h)	=	6455
Total vehicle travel (veh-mi/h)	=	2418.5
Total cost ($/h)	=	1777.20
Total fuel (ga/h)	=	169.5
Total CO2 (kg/h)	=	1605.28

Sea View II
Int. PR-3, PR-925 & Rampa PR-53; Hora Pico PM, 2011 Con Proyecto
Intersection ID: 5
Actuated Isolated Signals, Cycle Time = 122
Flow Scale = 103%

Table S.4 - PHASE INFORMATION

Phase Change Times: 0, 24, 76, 99
Phase Green Times: 20, 48, 19, 19

Current Phase Sequence No.: 1
Input phase sequence: A B C D
Output phase sequence: A B C D

Sea View II
Int. PR-3, PR-925 & Rampa PR-53; Hora Pico PM, 2011 Con Proyecto
Intersection ID: 5
Actuated Isolated Signals, Cycle Time = 122
Flow Scale = 103%

Table S.6 - INTERSECTION PERFORMANCE

Total	Deg.	Total	Total	Aver.	Prop.	Eff.	Longest	Perf.	Aver.

Flow (veh/h)	Satn x	Delay (veh-h/h)	Delay (pers-h/h)	Delay (sec)	Queued	Stop Rate	Queue (ft)	Index	Speed (mph)
INTERSECTION (persons):									
6653	1.047		118.39	64.1	0.862	0.97		395.53	24.9

Queue values in this table are 95% back of queue (feet).

Sea View II
Int. PR-3, PR-925 & Rampa PR-53; Hora Pico PM, 2011 Con Proyecto
Intersection ID: 5
Actuated Isolated Signals, Cycle Time = 122
Flow Scale = 103%

Table S.7 - LANE PERFORMANCE

Lane No.	Mov No.	Effective Red and Green Times (sec) R1	G1	R2	G2	Dem Flow (veh /h)	Cap (veh /h)	Deg. Satn x	Aver. Delay (sec)	Eff. Stop Rate	Queue 95% Back (vehs)	(ft)	Shrt Lane (ft)
West: PR-3 Oeste													
1 L	12	102	20	0	0	175	175	1.000	64.7r	0.81	11.7*	309<	160
2 LT	11	74	48	0	0	817	780	1.047	86.5	1.11	63.7	1629	
3 T	11	74	48	0	0	817	780	1.047	86.5	1.21	63.7	1604	
4 TR	11, 13	65	48	4	5	789	754	1.047	85.8	1.19	59.0	1495	
South: Ramp PR-53 Sur													
1 L	32	103	19	0	0	170	291	0.585	67.6	0.81	12.3	313	
2 LT	32, 31	4	1	98	19	176	301	0.585	60.6	0.80	12.2	312	
3 R	33	0	122	0	0	94	1639	0.057	9.3	0.65	2.5#		60
East: PR-3 Este													
1 L	22	102	20	0	0	307	304	1.009	123.0	1.04	27.3*	699<	400
2 LT	21	74	48	0	0	484	777	0.623	34.6	0.86	26.8	675	
3 T	21	74	48	0	0	485	778	0.623	34.6	0.74	26.8	676	
4 T	21	74	48	0	0	485	778	0.623	34.6	0.74	26.8	676	
5 R	23	0	122	0	0	281	1696	0.166	10.3	0.67	6.3#		400
North: PR-925 Norte													
1 LT	42, 41	103	19	0	0	162	299	0.542	60.7	0.78	11.6	295	
2 R	41, 43	4	19	38	61	302	363	0.832	36.4	0.90	14.4*	360	200

< Short lane capacity is reached and there is excess flow into an adjacent lane
Density (passenger cars per km or mile)
* Queue length exceeds short lane length due to specification of a percentile queue in the aaSIDRA Configuration File. For calculation of this statistic, you may specify the lane with full length.
r Delay, stops and queue length for this lane have been cut down to fit in the queuing space. The amount cut may not be accounted for fully in the

adjacent lane performance statistics. You may wish to change the short lane to a full lane to investigate the extent of this effect.

Sea View II
Int. PR-3, PR-925 & Rampa PR-53; Hora Pico PM, 2011 Con Proyecto
Intersection ID: 5
Actuated Isolated Signals, Cycle Time = 122
Flow Scale = 103%

Table S.10 - MOVEMENT CAPACITY AND PERFORMANCE SUMMARY

Mov No.	Mov Typ	Dem Flow (veh /h)	Total Cap. (veh /h)	Lane Util (%)	Deg. Satn x	Eff. Grn 1st Grn	Eff. Grn 2nd Grn	Aver. Delay (sec)	Eff. Stop Rate	95% Back of Queue (veh)	Perf. Index
West: PR-3 Oeste											
12	L	175	175<	100	1.000	20		64.7	0.81	11.7	11.68
11	LT	1955E	1867	100	1.047*	48		85.4	1.20	63.7	175.30
13	R	468E	447	100	1.047*	48*	66	90.2	1.19	59.0	41.52
South: Ramp PR-53 Sur											
32	L	305	522	100	0.585	19*		65.4	0.81	12.3	21.16
31	T	41	70	100	0.588	95	19	52.6	0.78	12.2	2.66
33	R (Con)	94	1639	100	0.057	122		9.3	0.65	2.5 #	1.56
East: PR-3 Este											
22	L	307	304	100	1.009	20*		123.0	1.04	27.3	30.80
21	LT	1454E	2334	100	0.623	48		34.6	0.74	26.8	79.87
23	R (Con)	281	1696	100	0.166	122		10.3	0.67	6.3 #	4.57
North: PR-925 Norte											
42	L	72	133	65	0.541	19		66.1	0.81	11.6	5.02
41	T	90	166	65	0.542	19		56.1	0.77	11.6	6.01
43	R (Un2)	302	363<	100	0.832	19*	61	36.4	0.90	14.4	15.40

E "Excess" flow from the short lane of an adjacent movement added to normal flow
< Reduced capacity due to a short lane effect
* Maximum degree of saturation, or critical green periods
# Largest density (passenger cars per km or mile) for any lane

---

Sea View II
Int. PR-3, PR-925 & Rampa PR-53; Hora Pico PM, 2011 Con Proyecto
Intersection ID: 5
Actuated Isolated Signals, Cycle Time = 122
Flow Scale = 103%

Table S.14 - SUMMARY OF INPUT AND OUTPUT DATA

Lane No.	Demand Flow (veh/h) L	T	R	Tot	%HV	Adj. Basic Satf.	Eff Grn (secs) 1st	2nd	Deg Sat x	Aver. Delay (sec)	Longest Queue (ft)	Shrt Lane (ft)
West: PR-3 Oeste												

1	L	175			175	7	2000	20		1.000	64.7r	309*	160
2	LT	175	554		817	2	2000	48		1.047	86.5	1629	
3	T		817		817	1	2000	48		1.047	86.5	1604	
4	TR		321	468	789	2	2000	48	5	1.047	85.8	1495	
		438	1692	468	2598	2				1.047	84.9	1629	
South:		Ramp PR-53 Sur											
1	L	170			170	2	2000	19		0.585	67.6	313	
2	LT	135	41		176	3	2000	1	19	0.585	60.6	312	
3	R			94	94	5	2000	122		0.057	9.3		60
		305	41	94	440	3				0.585	52.4	313	250d
East:		PR-3 Este											
1	L	307			307	3	2000	20		1.009	123.0	699*	400
2	LT	307	472		484	3	2000	48		0.623	34.6	675	
3	T		485		485	1	2000	48		0.623	34.6	676	
4	T		485		485	1	2000	48		0.623	34.6	676	
5	R			281	281	0	2000	122		0.166	10.3		400
		319	1442	281	2042	2				1.009	44.5	699	
North:		PR-925 Norte											
1	LT	72	90		162	2	2000	19		0.542	60.7	295	
2	R			302	302	0	2000	19	61	0.832	36.4	360*	200
		72	90	302	464	1				0.832	44.9	360	250d

ALL VEHICLES	Total Flow	% HV	Cycle Time	Max X	Aver. Delay	Max Queue
	5544	2	122	1.047	64.1	1629

Total flow period = 60 minutes. Peak flow period = 15 minutes.

Queue values in this table are 95% back of queue (feet).

Note: Basic Saturation Flows (in through car units) have been adjusted for grade, lane widths, parking manoeuvres and bus stops.

* Queue length exceeds short lane length due to specification of a percentile queue in the aaSIDRA Configuration File. For calculation of this statistic, you may specify the lane with full length.

d Short lane length on departure side.

r Delay, stops and queue length for this lane have been cut down to fit in the queuing space. The amount cut may not be accounted for fully in the adjacent lane performance statistics. You may wish to change the short lane to a full lane to investigate the extent of this effect.

Sea View II
Int. PR-3, PR-925 & Rampa PR-53; Hora Pico PM, 2011 Con Proyecto
Intersection ID: 5
Actuated Isolated Signals, Cycle Time = 122
Flow Scale = 103%

Table S.15 - CAPACITY AND LEVEL OF SERVICE

Mov No.	Mov Typ	Green Ratio (g/C) 1st grn	2nd grn	Total Flow (veh /h)	Total Cap. (veh /h)	Deg. of Satn (v/c)	Aver. Delay (sec)	LOS
West: PR-3 Oeste								
12	L	0.164		175	175<	1.000	64.7	E
11	LT	0.393		1955E	1867	1.047*	85.4	F
13	R	0.393*	0.541	468E	447	1.047*	90.2	F
				2598	2489	1.047	84.9	F
South: Ramp PR-53 Sur								
32	L	0.156*		305	522	0.585	65.4	E
31	T	0.779	0.156	41	70	0.588	52.6	D
33	R (Con)	1.000		94	1639	0.057	9.3	A#
				440	2230	0.588	52.2	D
East: PR-3 Este								
22	L	0.164*		307	304	1.009	123.0	F
21	LT	0.393		1454E	2334	0.623	34.6	C
23	R (Con)	1.000		281	1696	0.166	10.3	A#
				2042	4333	1.009	44.5	D
North: PR-925 Norte								
42	L	0.156		72	133	0.541	66.1	E
41	T	0.156		90	166	0.542	56.1	E
43	R (Un2)	0.156*	0.500	302	363<	0.832	36.4	D
				464	662	0.832	44.8	D
ALL VEHICLES:				5544	9715	1.047	64.1	E
INTERSECTION (persons):				6653	9715	1.047	64.1	

Level of Service calculations are based on
average control delay including geometric delay (HCM criteria),
independent of the current delay definition used.
For the criteria, refer to the "Level of Service" topic in the
aaSIDRA Output Guide or the Output section of the on-line help.

- # Level Of Service for continuous movements based on density
- < Reduced capacity due to a short lane effect
- * Maximum v/c ratio, or critical green periods
- E "Excess" flow from the short lane of an adjacent movement added to normal flow

Sea View II
Int. PR-3, PR-925 & Rampa PR-53; Hora Pico PM, 2011 Con Proyecto
Intersection ID: 5

Table S.23 - SENSITIVITY ANALYSIS RESULTS

Performance Measure	Smallest Value	Param Scale
Degree of Satn	1.042	100
Average Delay	64.1	95
Stop Rate	0.96	120
Max. Queue for Any Movement	60.9	65
Perf. Index	385.8	75
Cost total	1777.2	95

Performance Measure	Largest Value	Param Scale
Total Vehicle Cap.	9817	115
Prac. Spare Cap.	-14	100

Sea View II
Int. PR-3, PR-925 & Rampa PR-53; Hora Pico PM, 2011 Con Proyecto
Intersection ID: 5
Actuated Isolated Signals, Cycle Time = 122
Flow Scale = 103%

Table D.5 - PROGRESSION FACTORS & ACTUATED SIGNAL PARAMETERS

Mov No.	Control	Coord.	Arrival Type	Delay Prog. Factor	Queue Prog. Factor	Gap Settings es	Gap Settings eh	Disp. Grn. Settings 1st Grn Gmin	1st Grn Gmax	2nd Grn Gmin	2nd Grn Gmax
West: PR-3 Oeste											
12	VA	No	3	1.000	1.000	2.0	2.5	20	19		
11	VA	No	3	1.000	1.000	2.5	3.0	6	48		
13	VA	No	3	1.000	1.000	2.5	3.0	6	48	6	48
South: Ramp PR-53 Sur											
32	VA	No	3	1.000	1.000	2.0	2.5	6	19		
31	VA	No	3	1.000	1.000	2.5	3.0	6	48	6	48
33	VA	No	3	1.000	1.000	2.5	3.1	6	48		
East: PR-3 Este											
22	VA	No	3	1.000	1.000	2.0	2.5	20	19		
21	VA	No	3	1.000	1.000	2.5	3.0	6	48		
23	VA	No	3	1.000	1.000	2.5	3.0	6	48		
North: PR-925 Norte											
42	VA	No	3	1.000	1.000	2.0	2.5	6	19		
41	VA	No	3	1.000	1.000	2.5	3.0	6	19		
43	VA	No	3	1.000	1.000	2.5	3.1	6	19	6	48

Sea View II
Int. PR-3, PR-925 & Rampa PR-53; Hora Pico PM, 2011 Con Proyecto
Intersection ID: 5

Scaled sensitivity parameter: Maximum Green

Table V.23 - INTERSECTION SUMMARY FOR VARIABLE PARAMETER SCALE

Param Scale (%)	Cycle Time (sec)	Total Veh. Cap.	Intersn Deg. of Satn	Prac. Spare Cap.	Aver. Delay (sec)	Stop Rate	Longest Queue (veh)	Perf. Index	Cost Total $/h
50	81	8948	1.255	-28	87.8	1.18	63.5	416.8	2153.8
55	86	9101	1.204	-25	79.3	1.13	61.7	399.6	2023.3
60	90	9170	1.185	-24	77.0	1.11	61.9	397.8	1987.9
65	95	9300	1.147	-22	71.6	1.07	60.9	388.3	1903.3
70	99	9357	1.134	-21	70.6	1.06	61.5	389.8	1886.7
75	104	9462	1.106	-19	67.2	1.03	61.1	385.8	1833.6
80	108	9510	1.096	-18	67.1	1.02	62.0	389.5	1830.0
85	113	9602	1.073	-16	65.2	1.00	62.1	389.3	1798.2
90	117	9637	1.066	-16	65.8	0.99	63.2	395.2	1806.8
95	122	9715	1.047	-14	64.1	0.97	63.7	395.5	1777.2
100	126	9747	1.042	-14	64.2	0.96	64.9	400.2	1778.3
105	132	9786	1.109	-19	69.8	0.97	66.7	423.3	1850.2
110	137	9784	1.104	-19	71.2	0.97	68.9	432.5	1871.9
115	143	9817	1.114	-19	71.6	0.96	70.8	439.9	1876.1
120	148	9814	1.110	-19	73.1	0.96	73.0	449.2	1898.1

--- End of aaSIDRA Output ---

Akcelik & Associates Pty Ltd - aaSIDRA 2.0.0.205

Servicios Técnicos Integrados
Francisco J. Reyes Registered User No. 50310
Licence Type: Professional, Single Computer

Time and Date of Analysis 8:02 PM, May 4,2009

Filename: F:\My Documents\Francisco\Consultores\April\Humacao\Sea View II\Sidra\CC-3-11AMP.OUT

Sea View II
Intrseccion PR-3 & Ciudad Cristiana; Hora Pico AM, 2011 Con Proyecto
Intersection ID: 2

aaTraffic SIDRA US Highway Capacity Manual (2000) Version

RUN INFORMATION

* Basic Parameters:
  Intersection Type: Unsignalised - Two-Way Stop Control
  Driving on the right-hand side of the road
  Input data specified in US units
  Default Values File No. 11
  Peak flow period (for performance): 15 minutes
  Unit time (for volumes): 60 minutes (Total Flow Period)
  Delay definition: Control delay
  Geometric delay included
  HCM Delay and Queue Models option selected
  Level of Service based on: Delay (HCM method)
  Queue definition: Back of queue, 95th Percentile

Sea View II
Intrseccion PR-3 & Ciudad Cristiana; Hora Pico AM, 2011 Con Proyecto
Intersection ID: 2
Stop Sign Controlled Intersection
Flow Scale = 103%

Table S.3 - INTERSECTION PARAMETERS

Intersection Level of Service	=	C
Worst movement Level of Service	=	F
Average intersection delay (s)	=	22.1
Largest average movement delay (s)	=	157.4
Largest back of queue, 95% (ft)	=	392
Performance Index	=	50.33
Degree of saturation (highest)	=	1.000
Practical Spare Capacity (lowest)	=	-20 %
Total vehicle capacity, all lanes (veh/h)	=	5679
Total vehicle flow (veh/h)	=	2153
Total person flow (pers/h)	=	2584
Total vehicle delay (veh-h/h)	=	13.20
Total person delay (pers-h/h)	=	15.84

Total effective vehicle stops (veh/h)	=	382
Total effective person stops (pers/h)	=	458
Total vehicle travel (veh-mi/h)	=	897.6
Total cost ($/h)	=	417.36
Total fuel (ga/h)	=	43.8
Total CO2 (kg/h)	=	414.73

Sea View II
Intrseccion PR-3 & Ciudad Cristiana; Hora Pico AM, 2011 Con Proyecto
Intersection ID: 2
Stop Sign Controlled Intersection
Flow Scale = 103%

Table S.6 - INTERSECTION PERFORMANCE

Total Flow (veh/h)	Deg. Satn x	Total Delay (veh-h/h)	Total Delay (pers-h/h)	Aver. Delay (sec)	Prop. Queued	Eff. Stop Rate	Longest Queue (ft)	Perf. Index	Aver. Speed (mph)
INTERSECTION (persons):									
2584	1.000		15.84	22.1	0.621	0.18		50.33	40.2

Queue values in this table are 95% back of queue (feet).

Sea View II
Intrseccion PR-3 & Ciudad Cristiana; Hora Pico AM, 2011 Con Proyecto
Intersection ID: 2
Stop Sign Controlled Intersection
Flow Scale = 103%

Table S.7 - LANE PERFORMANCE

Lane No.	Mov No.	Dem Flow (veh /h)	Cap (veh /h)	Deg. Satn x	Aver. Delay (sec)	Eff. Stop Rate	Queue 95% Back (vehs)	Queue 95% Back (ft)	Short Lane (ft)
West: PR-3 Oeste									
1 T	12	761	1924	0.395	0.0	0.00	0.0	0	
2 R	13	54	1657	0.033	9.2	0.65	0.0	0	
South: Ciudad Cristiana Sur									
1 L	32	99	99	0.994	167.5	1.30	10.0	250	
2 LR	32, 33	125	126	0.994	145.3	1.42	11.2	279	
East: PR-3 Este									
1 LT	22	1114	1872	0.595	11.0	0.04	15.4	392	

Sea View II
Intrseccion PR-3 & Ciudad Cristiana; Hora Pico AM, 2011 Con Proyecto
Intersection ID: 2
Stop Sign Controlled Intersection

Flow Scale = 103%

Table S.10 - MOVEMENT CAPACITY AND PERFORMANCE SUMMARY

Mov No.	Mov Typ	Dem Flow (veh /h)	Total Cap. (veh /h)	Lane Util (%)	Deg. Satn x	Aver. Delay (sec)	Eff. Stop Rate	95% Back of Queue (veh)	Perf. Index
West: PR-3 Oeste									
12	T	761	1924	100	0.396	0.0	0.00	0.0	7.94
13	R	54	1657	100	0.033	9.2	0.65	0.0	0.89
South: Ciudad Cristiana Sur									
32	L	181	182	100	0.995	157.4	1.34	11.2	17.01
33	R	43	43	100	1.000*	145.3	1.49	11.2	3.84
East: PR-3 Este									
22	LT	1114	1872	100	0.595	11.0	0.04	15.4	20.65

* Maximum degree of saturation

Sea View II
Intrseccion PR-3 & Ciudad Cristiana; Hora Pico AM, 2011 Con Proyecto
Intersection ID: 2
Stop Sign Controlled Intersection
Flow Scale = 103%

Table S.14 - SUMMARY OF INPUT AND OUTPUT DATA

Lane No.	Demand Flow (veh/h) L	T	R	Tot	%HV	Adj. Basic Satf.	Eff Grn (secs) 1st	2nd	Deg Sat x	Aver. Delay (sec)	Longest Queue (ft)	Shrt Lane (ft)
West: PR-3 Oeste												
1 T		761		761	4				0.395	0.0	0	
2 R			54	54	4				0.033	9.2	0	
	0	761	54	815	4				0.395	0.6		
South: Ciudad Cristiana Sur												
1 L	99			99	0				0.994	167.5	250	
2 LR	82		43	125	0				0.994	145.3	279	
	181	0	43	224	0				0.994	155.1	279	
East: PR-3 Este												
1 LT	32	1082		1114	2				0.595	11.0	392	
	32	1082	0	1114	2				0.595	11.0	392	

ALL VEHICLES	Total Flow	% HV	Max X	Aver. Delay	Max Queue
	2153	3	1.000	22.1	392

Total flow period = 60 minutes. Peak flow period = 15 minutes.

Queue values in this table are 95% back of queue (feet).

Note: Basic Saturation Flows are not adjusted at roundabouts or sign-controlled intersections and apply only to continuous lanes.

Sea View II
Intrseccion PR-3 & Ciudad Cristiana; Hora Pico AM, 2011 Con Proyecto
Intersection ID: 2
Stop Sign Controlled Intersection
Flow Scale = 103%

Table S.15 - CAPACITY AND LEVEL OF SERVICE

Mov No.	Mov Typ	Total Flow (veh /h)	Total Cap. (veh /h)	Deg. of Satn (v/c)	Aver. Delay (sec)	LOS
West: PR-3 Oeste						
12	T	761	1924	0.396	0.0	A
13	R	54	1657	0.033	9.2	A
		815	3581	0.396	0.6	A
South: Ciudad Cristiana Sur						
32	L	181	182	0.995	157.4	F
33	R	43	43	1.000*	145.3	F
		224	225	1.000	155.1	F
East: PR-3 Este						
22	LT	1114	1872	0.595	11.0	B
		1114	1872	0.595	11.0	B
ALL VEHICLES:		2153	5679	1.000	22.1	C

Level of Service calculations are based on average control delay including geometric delay (HCM criteria), independent of the current delay definition used.
For the criteria, refer to the "Level of Service" topic in the aaSIDRA Output Guide or the Output section of the on-line help.
* Maximum v/c ratio, or critical green periods

--- End of aaSIDRA Output ---

Akcelik & Associates Pty Ltd - aaSIDRA 2.0.0.205

Servicios Técnicos Integrados
Francisco J. Reyes Registered User No. 50310
Licence Type: Professional, Single Computer

Time and Date of Analysis 4:53 PM, May 4,2009

Filename: F:\My Documents\Francisco\Consultores\April\Humacao\Sea View II\Sidra\CC-3-11PMP.OUT

Sea View II
Intrseccion PR-3 & Ciudad Cristiana; Hora Pico PM, 2011 Con Proyecto
Intersection ID: 2

aaTraffic SIDRA US Highway Capacity Manual (2000) Version

RUN INFORMATION

* Basic Parameters:
  Intersection Type: Unsignalised - Two-Way Stop Control
  Driving on the right-hand side of the road
  Input data specified in US units
  Default Values File No. 11
  Peak flow period (for performance): 15 minutes
  Unit time (for volumes): 60 minutes (Total Flow Period)
  Delay definition: Control delay
  Geometric delay included
  HCM Delay and Queue Models option selected
  Level of Service based on: Delay (HCM method)
  Queue definition: Back of queue, 95th Percentile

Sea View II
Intrseccion PR-3 & Ciudad Cristiana; Hora Pico PM, 2011 Con Proyecto
Intersection ID: 2
Stop Sign Controlled Intersection
Flow Scale = 103%

Table S.3 - INTERSECTION PARAMETERS

Intersection Level of Service	=	A
Worst movement Level of Service	=	F
Average intersection delay (s)	=	9.7
Largest average movement delay (s)	=	67.1
Largest back of queue, 95% (ft)	=	292
Performance Index	=	34.61
Degree of saturation (highest)	=	0.502
Practical Spare Capacity (lowest)	=	60
Total vehicle capacity, all lanes (veh/h)	=	5549
Total vehicle flow (veh/h)	=	2081
Total person flow (pers/h)	=	2497
Total vehicle delay (veh-h/h)	=	5.59
Total person delay (pers-h/h)	=	6.71

Total effective vehicle stops (veh/h)	=	271
Total effective person stops (pers/h)	=	325
Total vehicle travel (veh-mi/h)	=	867.7
Total cost ($/h)	=	333.05
Total fuel (ga/h)	=	37.7
Total CO2 (kg/h)	=	356.73

Sea View II
Intrseccion PR-3 & Ciudad Cristiana; Hora Pico PM, 2011 Con Proyecto
Intersection ID: 2
Stop Sign Controlled Intersection
Flow Scale = 103%

Table S.6 - INTERSECTION PERFORMANCE

Total Flow (veh/h)	Deg. Satn x	Total Delay (veh-h/h)	Total Delay (pers-h/h)	Aver. Delay (sec)	Prop. Queued	Eff. Stop Rate	Longest Queue (ft)	Perf. Index	Aver. Speed (mph)
INTERSECTION (persons):									
2497	0.502		6.71	9.7	0.450	0.13		34.61	50.9

Queue values in this table are 95% back of queue (feet).

Sea View II
Intrseccion PR-3 & Ciudad Cristiana; Hora Pico PM, 2011 Con Proyecto
Intersection ID: 2
Stop Sign Controlled Intersection
Flow Scale = 103%

Table S.7 - LANE PERFORMANCE

Lane No.	Mov No.	Dem Flow (veh /h)	Cap (veh /h)	Deg. Satn x	Aver. Delay (sec)	Eff. Stop Rate	Queue 95% Back (vehs)	Queue 95% Back (ft)	Short Lane (ft)
West: PR-3 Oeste									
1 T	12	980	1954	0.501	0.0	0.00	0.0	0	
2 R	13	162	1685	0.096	9.1	0.65	0.0	0	
South: Ciudad Cristiana Sur									
1 L	32	45	95	0.475	73.1	1.06	2.9	73	
2 LR	32, 33	57	119	0.475	59.8	1.07	3.0	76	
East: PR-3 Este									
1 LT	22	837	1695	0.494	14.3	0.07	11.4	292	

Sea View II
Intrseccion PR-3 & Ciudad Cristiana; Hora Pico PM, 2011 Con Proyecto
Intersection ID: 2
Stop Sign Controlled Intersection

Flow Scale = 103%

Table S.10 - MOVEMENT CAPACITY AND PERFORMANCE SUMMARY

Mov No.	Mov Typ	Dem Flow (veh /h)	Total Cap. (veh /h)	Lane Util (%)	Deg. Satn x	Aver. Delay (sec)	Eff. Stop Rate	95% Back of Queue (veh)	Perf. Index
West: PR-3 Oeste									
12	T	980	1954	100	0.502*	0.0	0.00	0.0	10.22
13	R	162	1685	100	0.096	9.1	0.65	0.0	2.68
South: Ciudad Cristiana Sur									
32	L	82	173	100	0.474	67.1	1.06	3.0	4.43
33	R	20	42	100	0.476	59.8	1.08	3.0	1.00
East: PR-3 Este									
22	LT	837	1695	100	0.494	14.3	0.07	11.4	16.27

* Maximum degree of saturation

Sea View II
Intrseccion PR-3 & Ciudad Cristiana; Hora Pico PM, 2011 Con Proyecto
Intersection ID: 2
Stop Sign Controlled Intersection
Flow Scale = 103%

Table S.14 - SUMMARY OF INPUT AND OUTPUT DATA

Lane No.	Demand Flow (veh/h) L	T	R	Tot	%HV	Adj. Basic Satf.	Eff Grn (secs) 1st	2nd	Deg Sat x	Aver. Delay (sec)	Longest Queue (ft)	Shrt Lane (ft)
West: PR-3 Oeste												
1 T		980		980	2				0.501	0.0	0	
2 R			162	162	1				0.096	9.1	0	
	0	980	162	1142	2				0.501	1.3		
South: Ciudad Cristiana Sur												
1 L	45			45	0				0.475	73.1	73	
2 LR	37		20	57	0				0.475	59.8	76	
	82	0	20	102	0				0.475	65.7	76	
East: PR-3 Este												
1 LT	48	789		837	3				0.494	14.3	292	
	48	789	0	837	3				0.494	14.3	292	

ALL VEHICLES	Total Flow	% HV	Max X	Aver. Delay	Max Queue
	2081	2	0.502	9.7	292

Total flow period = 60 minutes. Peak flow period = 15 minutes.

Queue values in this table are 95% back of queue (feet).

Note: Basic Saturation Flows are not adjusted at roundabouts or sign-controlled intersections and apply only to continuous lanes.

Sea View II
Intrseccion PR-3 & Ciudad Cristiana; Hora Pico PM, 2011 Con Proyecto
Intersection ID: 2
Stop Sign Controlled Intersection
Flow Scale = 103%

Table S.15 - CAPACITY AND LEVEL OF SERVICE

Mov No.	Mov Typ	Total Flow (veh /h)	Total Cap. (veh /h)	Deg. of Satn (v/c)	Aver. Delay (sec)	LOS
West: PR-3 Oeste						
12	T	980	1954	0.502*	0.0	A
13	R	162	1685	0.096	9.1	A
		1142	3639	0.502	1.3	A
South: Ciudad Cristiana Sur						
32	L	82	173	0.474	67.1	F
33	R	20	42	0.476	59.8	F
		102	215	0.476	65.7	F
East: PR-3 Este						
22	LT	837	1695	0.494	14.3	B
		837	1695	0.494	14.3	B
ALL VEHICLES:		2081	5549	0.502	9.7	A

Level of Service calculations are based on average control delay including geometric delay (HCM criteria), independent of the current delay definition used.
For the criteria, refer to the "Level of Service" topic in the aaSIDRA Output Guide or the Output section of the on-line help.
* Maximum v/c ratio, or critical green periods

--- End of aaSIDRA Output ---

```
                 Akcelik & Associates Pty Ltd - aaSIDRA 2.0.0.205
                 ------------------------------------------------
                 Servicios Técnicos Integrados
                 Francisco J. Reyes        Registered User No. 50310
                 Licence Type: Professional, Single Computer

                 Time and Date of Analysis    1:51 PM, May  4,2009

 Filename: F:\My Documents\Francisco\Consultores\April\Humacao\Sea View
II\Sidra\CCom-3-11AMP.OUT

 Sea View II
 Int. PR-3 & Acceso a Centro Comercial, Hora Pico AM, 2011 Con Proyecto
 Intersection ID:     3

 aaTraffic SIDRA US Highway Capacity Manual (2000) Version


 RUN INFORMATION
 ---------------
 Parameter sensitivity run: "Optimum" Maximum Green =  50.0 %

 * Basic Parameters:
   Intersection Type: Signalised - Actuated Isolated
   For fully-actuated signal timings, the following specifications will be
ignored:
     Any maximum cycle time specification
     Any user-given cycle time (unless phase times also given)
     User-given cycle and phase times (if variable flow scale run)
     Any variable cycle time specification
     Any green split priority specification
   Driving on the right-hand side of the road
   Input data specified in US units
   Default Values File No. 11
   Peak flow period (for performance): 15 minutes
   Unit time (for volumes): 60 minutes (Total Flow Period)
   Delay definition: Control delay
                     Geometric delay included
   HCM Delay and Queue Models option selected
   Level of Service based on: Delay (HCM method)
   Queue definition: Back of queue, 95th Percentile

 * No. of Main (Timing-Capacity) Iterations =  2
   Comparison of last two iterations:
     Difference in intersection degree of satn =  0.0 %
     Difference in total vehicle capacity      =  0.0 %
     Largest difference in eff. green times =  0 secs
     (max. value for stopping = 0 secs)
```

```
 Sea View II
 Int. PR-3 & Acceso a Centro Comercial, Hora Pico AM, 2011 Con Proyecto
 Intersection ID:     3
            Actuated Isolated Signals, Cycle Time =  52
 Flow Scale = 103%
```

Table S.3 - INTERSECTION PARAMETERS

Critical Movements: 12, 23(1st), 43(2nd)

L= 28 Y= 0.378 U= 0.460 T= 51.9

Cycle Time:

Minimum	Maximum	Practical	Chosen
30	NA	52	52

Intersection Level of Service	=	B
Worst movement Level of Service	=	D
Average intersection delay (s)	=	13.0
Largest average movement delay (s)	=	35.2
Largest back of queue, 95% (ft)	=	467
Performance Index	=	85.52
Degree of saturation (highest)	=	0.741
Practical Spare Capacity (lowest)	=	21 %
Total vehicle capacity, all lanes (veh/h)	=	6700
Total vehicle flow (veh/h)	=	2968
Total person flow (pers/h)	=	3562
Total vehicle delay (veh-h/h)	=	10.75
Total person delay (pers-h/h)	=	12.90
Total effective vehicle stops (veh/h)	=	1831
Total effective person stops (pers/h)	=	2197
Total vehicle travel (veh-mi/h)	=	1237.1
Total cost ($/h)	=	512.27
Total fuel (ga/h)	=	61.4
Total CO2 (kg/h)	=	582.23

Sea View II
Int. PR-3 & Acceso a Centro Comercial, Hora Pico AM, 2011 Con Proyecto
Intersection ID: 3
Actuated Isolated Signals, Cycle Time = 52
Flow Scale = 103%

Table S.4 - PHASE INFORMATION

Phase Change Times: 0, 14, 42
Phase Green Times: 10, 24, 6

Current Phase Sequence No.: 1
Input phase sequence: A B D
Output phase sequence: A B D

Sea View II
Int. PR-3 & Acceso a Centro Comercial, Hora Pico AM, 2011 Con Proyecto
Intersection ID: 3
Actuated Isolated Signals, Cycle Time = 52
Flow Scale = 103%

Table S.6 - INTERSECTION PERFORMANCE

Total	Deg.	Total	Total	Aver.	Prop.	Eff.	Longest	Perf.	Aver.

Flow (veh/h)	Satn x	Delay (veh-h/h)	Delay (pers-h/h)	Delay (sec)	Queued	Stop Rate	Queue (ft)	Index	Speed (mph)
INTERSECTION (persons):									
3562	0.741		12.90	13.0	0.668	0.62		85.52	47.4

Queue values in this table are 95% back of queue (feet).

Sea View II
Int. PR-3 & Acceso a Centro Comercial, Hora Pico AM, 2011 Con Proyecto
Intersection ID: 3
Actuated Isolated Signals, Cycle Time = 52
Flow Scale = 103%

Table S.7 - LANE PERFORMANCE

Lane No.	Mov No.	Effective Green Times (sec) R1	G1	R2	G2	Dem Flow (veh /h)	Cap (veh /h)	Deg. Satn x	Aver. Delay (sec)	Eff. Stop Rate	Queue 95% Back (vehs)	(ft)	Shrt Lane (ft)
West: PR-3 Oeste													
1 L	12	42	10	0	0	150	356	0.420	31.8	0.79	4.8	122	160
2 L	12	42	10	0	0	150	356	0.420	31.8	0.79	4.8	122	160
3 T	11	14	38	0	0	582	1399	0.416	3.3	0.36	7.8	202	
4 T	11	14	38	0	0	582	1399	0.416	3.3	0.36	7.8	202	
East: PR-3 Este													
1 T	21	28	24	0	0	664	897	0.740	16.4	0.77	18.3	467	
2 TR	21, 23	20	24	7	1	662	895	0.740	16.8	0.79	17.8	457	
North: Centro Comercial Norte													
1 L	42	46	6	0	0	40	193	0.207	35.2	0.73	1.4	38	
2 R	43	18	24	4	6	70	602	0.115	14.2	0.75	1.0	26	
3 R	43	18	24	4	6	70	602	0.115	14.2	0.75	1.0	26	

Sea View II
Int. PR-3 & Acceso a Centro Comercial, Hora Pico AM, 2011 Con Proyecto
Intersection ID: 3
Actuated Isolated Signals, Cycle Time = 52
Flow Scale = 103%

Table S.10 - MOVEMENT CAPACITY AND PERFORMANCE SUMMARY

Mov No.	Mov Typ	Dem Flow (veh /h)	Total Cap. (veh /h)	Lane Util (%)	Deg. Satn x	Eff. Grn 1st Grn	Eff. Grn 2nd Grn	Aver. Delay (sec)	Eff. Stop Rate	95% Back of Queue (veh)	Perf. Index
West: PR-3 Oeste											
12	L	299	712	100	0.420	10*		31.8	0.79	4.8	11.75
11	T	1164	2798	100	0.416	38		3.3	0.36	7.8	23.42

East: PR-3 Este											
21 T		1273	1721	100	0.740	24		16.2	0.78	18.3	43.25
23 R	(Un2)	53	72	100	0.741*	24*	17	26.1	0.89	17.8	1.96
North: Centro Comercial Norte											
42 L		40	193	100	0.207	6		35.2	0.73	1.4	1.63
43 R	(Un1)	139	1205	100	0.115	24	6*	14.2	0.75	1.0	3.51

* Maximum degree of saturation, or critical green periods

Sea View II
Int. PR-3 & Acceso a Centro Comercial, Hora Pico AM, 2011 Con Proyecto
Intersection ID: 3
Actuated Isolated Signals, Cycle Time = 52
Flow Scale = 103%

Table S.14 - SUMMARY OF INPUT AND OUTPUT DATA

Lane No.	Demand Flow (veh/h) L	T	R	Tot	%HV	Adj. Basic Satf.	Eff Grn (secs) 1st	2nd	Deg Sat x	Aver. Delay (sec)	Longest Queue (ft)	Shrt Lane (ft)
West: PR-3 Oeste												
1 L	150			150	3	2000	10		0.420	31.8	122	160
2 L	150			150	3	2000	10		0.420	31.8	122	160
3 T		582		582	4	2000	38		0.416	3.3	202	
4 T		582		582	4	2000	38		0.416	3.3	202	
	299	1164	0	1463	4				0.420	9.1	202	
East: PR-3 Este												
1 T		664		664	3	2000	24		0.740	16.4	467	
2 TR		609	53	662	4	2000	24	1	0.740	16.8	457	
	0	1273	53	1326	3				0.740	16.6	467	
North: Centro Comercial Norte												
1 L	40			40	15	2000	6		0.207	35.2	38	
2 R			70	70	9	2000	24	6	0.115	14.2	26	
3 R			70	70	9	2000	24	6	0.115	14.2	26	
	40	0	139	179	11				0.207	18.9	38	

ALL VEHICLES	Total Flow	% HV	Cycle Time	Max X	Aver. Delay	Max Queue
	2968	4	52	0.741	13.0	467

Total flow period = 60 minutes. Peak flow period = 15 minutes.

Queue values in this table are 95% back of queue (feet).

Note: Basic Saturation Flows (in through car units) have been adjusted for grade, lane widths, parking manoeuvres and bus stops.

Sea View II

Int. PR-3 & Acceso a Centro Comercial, Hora Pico AM, 2011 Con Proyecto
Intersection ID: 3
Actuated Isolated Signals, Cycle Time = 52
Flow Scale = 103%

Table S.15 - CAPACITY AND LEVEL OF SERVICE

Mov No.	Mov Typ	Green Ratio (g/C) 1st grn	Green Ratio (g/C) 2nd grn	Total Flow (veh /h)	Total Cap. (veh /h)	Deg. of Satn (v/c)	Aver. Delay (sec)	LOS
West: PR-3 Oeste								
12 L		0.192*		299	712	0.420	31.8	C
11 T		0.731		1164	2798	0.416	3.3	A
				1463	3510	0.420	9.1	A
East: PR-3 Este								
21 T		0.462		1273	1721	0.740	16.2	B
23 R	(Un2)	0.462*	0.327	53	72	0.741*	26.1	C
				1326	1792	0.741	16.6	B
North: Centro Comercial Norte								
42 L		0.115		40	193	0.207	35.2	D
43 R	(Un1)	0.462	0.115*	139	1205	0.115	14.2	B
				179	1398	0.207	18.9	B
ALL VEHICLES:				2968	6700	0.741	13.0	B
INTERSECTION (persons):				3562	6700	0.741	13.0	

Level of Service calculations are based on
average control delay including geometric delay (HCM criteria),
independent of the current delay definition used.
For the criteria, refer to the "Level of Service" topic in the
aaSIDRA Output Guide or the Output section of the on-line help.
* Maximum v/c ratio, or critical green periods

Sea View II
Int. PR-3 & Acceso a Centro Comercial, Hora Pico AM, 2011 Con Proyecto
Intersection ID: 3

Table S.23 - SENSITIVITY ANALYSIS RESULTS

Performance Measure	Smallest Value	Param Scale
Degree of Satn	0.741	50
Average Delay	13.0	50
Stop Rate	0.61	65

Max. Queue for Any Movement	18.3	50
Perf. Index	85.5	50
Cost total	512.3	50

Performance Measure	Largest Value	Param Scale
Total Vehicle Cap.	6756	55
Prac. Spare Cap.	21	50

Sea View II
Int. PR-3 & Acceso a Centro Comercial, Hora Pico AM, 2011 Con Proyecto
Intersection ID: 3
Actuated Isolated Signals, Cycle Time = 52
Flow Scale = 103%

Table D.5 - PROGRESSION FACTORS & ACTUATED SIGNAL PARAMETERS

Mov No.	Control	Coord.	Arrival Type	Delay Prog. Factor	Queue Prog. Factor	Gap Settings es	Gap Settings eh	Disp. Grn. Settings 1st Grn Gmin	1st Grn Gmax	2nd Grn Gmin	2nd Grn Gmax
West: PR-3 Oeste											
12	VA	No	3	1.000	1.000	2.0	2.6	6	10		
11	VA	No	3	1.000	1.000	2.5	3.1	6	25		
East: PR-3 Este											
21	VA	No	3	1.000	1.000	2.5	3.1	6	25		
23	VA	No	3	1.000	1.000	2.5	3.1	6	25	6	25
North: Centro Comercial Norte											
42	VA	No	3	1.000	1.000	2.0	2.6	6	10		
43	VA	No	3	1.000	1.000	2.5	3.1	6	25	6	25

Sea View II
Int. PR-3 & Acceso a Centro Comercial, Hora Pico AM, 2011 Con Proyecto
Intersection ID: 3

Scaled sensitivity parameter: Maximum Green

Table V.23 - INTERSECTION SUMMARY FOR VARIABLE PARAMETER SCALE

Param Scale (%)	Cycle Time (sec)	Total Veh. Cap.	Intersn Deg. of Satn	Prac. Spare Cap.	Aver. Delay (sec)	Stop Rate	Longest Queue (veh)	Perf. Index	Cost Total $/h
50	52	6700	0.741	21	13.0	0.62	18.3	85.5	512.3
55	53	6756	0.755	19	13.5	0.62	18.9	86.7	515.6
60	53	6755	0.755	19	13.5	0.62	18.9	86.7	515.3
65	53	6754	0.755	19	13.5	0.61	18.9	86.6	515.0
70	53	6754	0.755	19	13.5	0.61	18.9	86.6	515.0
75	53	6753	0.755	19	13.5	0.61	18.9	86.6	515.0

80	53	6753	0.755	19	13.5	0.61	18.9	86.6	515.0
85	53	6752	0.755	19	13.5	0.61	18.9	86.6	515.0
90	53	6752	0.755	19	13.5	0.61	18.9	86.6	515.0
95	53	6751	0.755	19	13.5	0.61	18.9	86.6	515.0
100	53	6751	0.755	19	13.5	0.61	18.9	86.6	515.0
105	53	6751	0.755	19	13.5	0.61	18.9	86.6	515.0
110	53	6751	0.755	19	13.5	0.61	18.9	86.6	515.0
115	53	6751	0.755	19	13.5	0.61	18.9	86.6	515.0
120	53	6751	0.755	19	13.5	0.62	18.9	86.7	515.1

--- End of aaSIDRA Output ---

Akcelik & Associates Pty Ltd - aaSIDRA 2.0.0.205

Servicios Técnicos Integrados
Francisco J. Reyes Registered User No. 50310
Licence Type: Professional, Single Computer

Time and Date of Analysis 4:56 PM, May 4,2009

Filename: F:\My Documents\Francisco\Consultores\April\Humacao\Sea View II\Sidra\CCom-3-11PMP.OUT

Sea View II
Int. PR-3 & Acceso a Centro Comercial, Hora Pico PM, 2011 Con Proyecto
Intersection ID: 3

aaTraffic SIDRA US Highway Capacity Manual (2000) Version

RUN INFORMATION

Parameter sensitivity run: "Optimum" Maximum Green = 60.0 %

* Basic Parameters:
  Intersection Type: Signalised - Actuated Isolated
  For fully-actuated signal timings, the following specifications will be ignored:
    Any maximum cycle time specification
    Any user-given cycle time (unless phase times also given)
    User-given cycle and phase times (if variable flow scale run)
    Any variable cycle time specification
    Any green split priority specification
  Driving on the right-hand side of the road
  Input data specified in US units
  Default Values File No. 11
  Peak flow period (for performance): 15 minutes
  Unit time (for volumes): 60 minutes (Total Flow Period)
  Delay definition: Control delay
                    Geometric delay included
  HCM Delay and Queue Models option selected
  Level of Service based on: Delay (HCM method)
  Queue definition: Back of queue, 95th Percentile

* No. of Main (Timing-Capacity) Iterations = 2
  Comparison of last two iterations:
    Difference in intersection degree of satn = 0.0 %
    Difference in total vehicle capacity = 0.0 %
    Largest difference in eff. green times = 0 secs
    (max. value for stopping = 0 secs)

Sea View II
Int. PR-3 & Acceso a Centro Comercial, Hora Pico PM, 2011 Con Proyecto
Intersection ID: 3
Actuated Isolated Signals, Cycle Time = 62
Flow Scale = 103%

Table S.3 - INTERSECTION PARAMETERS

Critical Movements: 12, 23(1st), 43(2nd)

L= 24 Y= 0.477 U= 0.612 T= 62.0

Cycle Time:

Minimum	Maximum	Practical	Chosen
30	NA	62	62

Intersection Level of Service	=	B
Worst movement Level of Service	=	D
Average intersection delay (s)	=	20.0
Largest average movement delay (s)	=	45.9
Largest back of queue, 95% (ft)	=	544
Performance Index	=	125.85
Degree of saturation (highest)	=	0.827
Practical Spare Capacity (lowest)	=	9 %
Total vehicle capacity, all lanes (veh/h)	=	6734
Total vehicle flow (veh/h)	=	3662
Total person flow (pers/h)	=	4394
Total vehicle delay (veh-h/h)	=	20.30
Total person delay (pers-h/h)	=	24.36
Total effective vehicle stops (veh/h)	=	2527
Total effective person stops (pers/h)	=	3032
Total vehicle travel (veh-mi/h)	=	1524.5
Total cost ($/h)	=	724.30
Total fuel (ga/h)	=	80.4
Total CO2 (kg/h)	=	762.20

Sea View II
Int. PR-3 & Acceso a Centro Comercial, Hora Pico PM, 2011 Con Proyecto
Intersection ID: 3
Actuated Isolated Signals, Cycle Time = 62
Flow Scale = 103%

Table S.4 - PHASE INFORMATION

Phase Change Times: 0, 16, 47
Phase Green Times: 12, 27, 11

Current Phase Sequence No.: 1
Input phase sequence: A B D
Output phase sequence: A B D

Sea View II
Int. PR-3 & Acceso a Centro Comercial, Hora Pico PM, 2011 Con Proyecto
Intersection ID: 3
Actuated Isolated Signals, Cycle Time = 62
Flow Scale = 103%

Table S.6 - INTERSECTION PERFORMANCE

Total	Deg.	Total	Total	Aver.	Prop.	Eff.	Longest	Perf.	Aver.

Flow (veh/h)	Satn x	Delay (veh-h/h)	Delay (pers-h/h)	Delay (sec)	Queued	Stop Rate	Queue (ft)	Index	Speed (mph)
INTERSECTION (persons):									
4394	0.827		24.36	20.0	0.723	0.69		125.85	40.3

Queue values in this table are 95% back of queue (feet).

Sea View II
Int. PR-3 & Acceso a Centro Comercial, Hora Pico PM, 2011 Con Proyecto
Intersection ID: 3
Actuated Isolated Signals, Cycle Time = 62
Flow Scale = 103%

Table S.7 - LANE PERFORMANCE

Lane No.	Mov No.	Effective Red and Green Times (sec) R1	G1	R2	G2	Dem Flow (veh /h)	Cap (veh /h)	Deg. Satn x	Aver. Delay (sec)	Eff. Stop Rate	Queue 95% Back (vehs)	(ft)	Shrt Lane (ft)
West: PR-3 Oeste													
1 L	12	50	12	0	0	297	358	0.827	45.9r	0.88	12.0*	308	160
2 L	12	50	12	0	0	297	358	0.827	45.9r	0.88	12.0*	308	160
3 T	11	19	43	0	0	594	1339	0.444	4.9	0.42	10.5	269	
4 T	11	19	43	0	0	594	1339	0.444	4.9	0.42	10.5	269	
East: PR-3 Este													
1 T	21	35	27	0	0	643	845	0.760	20.9	0.80	21.2	544	
2 TR	21, 23	13	1	21	27	614	808	0.760	23.0	0.82	20.2	523	
North: Centro Comercial Norte													
1 L	42	51	11	0	0	120	301	0.399	37.0	0.78	4.6	126	
2 R	43	21	26	4	11	252	693	0.364	15.9	0.80	5.1	129	
3 R	43	21	26	4	11	252	693	0.364	15.9	0.80	5.1	129	

* Queue length exceeds short lane length due to specification of a percentile queue in the aaSIDRA Configuration File. For calculation of this statistic, you may specify the lane with full length.

r Delay, stops and queue length for this lane have been cut down to fit in the queuing space. The amount cut may not be accounted for fully in the adjacent lane performance statistics. You may wish to change the short lane to a full lane to investigate the extent of this effect.

Sea View II
Int. PR-3 & Acceso a Centro Comercial, Hora Pico PM, 2011 Con Proyecto
Intersection ID: 3
Actuated Isolated Signals, Cycle Time = 62
Flow Scale = 103%

Table S.10 - MOVEMENT CAPACITY AND PERFORMANCE SUMMARY

Mov No.	Mov Typ	Dem Flow	Total Cap.	Lane Util	Deg. Satn	Eff. Grn	Aver. Delay	Eff. Stop	95% Back of	Perf. Index

	(veh /h)	(veh /h)	(%)	x	1st Grn	2nd Grn	(sec)	Rate	Queue (veh)	
West: PR-3 Oeste										
12 L	593	717	100	0.827*	12*		45.9	0.88	12.0	29.10
11 T	1188	2677	100	0.444	43		4.9	0.42	10.5	27.54
East: PR-3 Este										
21 T	1193	1569	100	0.760	27		21.4	0.80	21.2	46.51
23 R (Un2)	64	85	100	0.756	27*	18	32.1	0.90	20.2	2.71
North: Centro Comercial Norte										
42 L	120	301	100	0.399	11		37.0	0.78	4.6	5.25
43 R (Un1)	504	1385	100	0.364	26	11*	15.9	0.80	5.1	14.73

* Maximum degree of saturation, or critical green periods

Sea View II
Int. PR-3 & Acceso a Centro Comercial, Hora Pico PM, 2011 Con Proyecto
Intersection ID: 3
Actuated Isolated Signals, Cycle Time = 62
Flow Scale = 103%

Table S.14 - SUMMARY OF INPUT AND OUTPUT DATA

Lane No.	Demand Flow (veh/h) L	T	R	Tot	%HV	Adj. Basic Satf.	Eff Grn (secs) 1st	2nd	Deg Sat x	Aver. Delay (sec)	Longest Queue (ft)	Shrt Lane (ft)
West: PR-3 Oeste												
1 L	297			297	3	2000	12		0.827	45.9r	308*	160
2 L	297			297	3	2000	12		0.827	45.9r	308*	160
3 T		594		594	4	2000	43		0.444	4.9	269	
4 T		594		594	4	2000	43		0.444	4.9	269	
	593	1188	0	1781	3				0.827	18.6	308	
East: PR-3 Este												
1 T		643		643	3	2000	27		0.760	20.9	544	
2 TR		550	64	614	4	2000	1	27	0.760	23.0	523	
	0	1193	64	1257	4				0.760	21.9	544	
North: Centro Comercial Norte												
1 L	120			120	13	2000	11		0.399	37.0	126	
2 R			252	252	1	2000	26	11	0.364	15.9	129	
3 R			252	252	1	2000	26	11	0.364	15.9	129	
	120	0	504	624	4				0.399	19.9	129	

ALL VEHICLES	Total Flow	% HV	Cycle Time	Max X	Aver. Delay	Max Queue
	3662	3	62	0.827	20.0	544

Total flow period = 60 minutes. Peak flow period = 15 minutes.

Queue values in this table are 95% back of queue (feet).

Note: Basic Saturation Flows (in through car units) have been adjusted for grade, lane widths, parking manoeuvres and bus stops.

* Queue length exceeds short lane length due to specification of a percentile queue in the aaSIDRA Configuration File. For calculation of this statistic, you may specify the lane with full length.

r Delay, stops and queue length for this lane have been cut down to fit in the queuing space. The amount cut may not be accounted for fully in the adjacent lane performance statistics. You may wish to change the short lane to a full lane to investigate the extent of this effect.

Sea View II
Int. PR-3 & Acceso a Centro Comercial, Hora Pico PM, 2011 Con Proyecto
Intersection ID: 3
Actuated Isolated Signals, Cycle Time = 62
Flow Scale = 103%

Table S.15 - CAPACITY AND LEVEL OF SERVICE

Mov No.	Mov Typ	Green Ratio (g/C) 1st grn	Green Ratio (g/C) 2nd grn	Total Flow (veh /h)	Total Cap. (veh /h)	Deg. of Satn (v/c)	Aver. Delay (sec)	LOS
West: PR-3 Oeste								
12	L	0.194*		593	717	0.827*	45.9	D
11	T	0.694		1188	2677	0.444	4.9	A
				1781	3394	0.827	18.6	B
East: PR-3 Este								
21	T	0.435		1193	1569	0.760	21.4	C
23	R (Un2)	0.435*	0.290	64	85	0.756	32.1	C
				1257	1654	0.760	21.9	C
North: Centro Comercial Norte								
42	L	0.177		120	301	0.399	37.0	D
43	R (Un1)	0.419	0.177*	504	1385	0.364	15.9	B
				624	1686	0.399	19.9	B
ALL VEHICLES:				3662	6734	0.827	20.0	B
INTERSECTION (persons):				4394	6734	0.827	20.0	

Level of Service calculations are based on average control delay including geometric delay (HCM criteria), independent of the current delay definition used.
For the criteria, refer to the "Level of Service" topic in the aaSIDRA Output Guide or the Output section of the on-line help.

* Maximum v/c ratio, or critical green periods

Sea View II
Int. PR-3 & Acceso a Centro Comercial, Hora Pico PM, 2011 Con Proyecto
Intersection ID: 3

Table S.23 - SENSITIVITY ANALYSIS RESULTS

Performance Measure	Smallest Value	Param Scale
Degree of Satn	0.827	60
Average Delay	20.0	60
Stop Rate	0.67	110
Max. Queue for Any Movement	19.7	50
Perf. Index	124.2	50
Cost total	706.1	65

Performance Measure	Largest Value	Param Scale
Total Vehicle Cap.	6754	110
Prac. Spare Cap.	9	60

Sea View II
Int. PR-3 & Acceso a Centro Comercial, Hora Pico PM, 2011 Con Proyecto
Intersection ID: 3
Actuated Isolated Signals, Cycle Time = 62
Flow Scale = 103%

Table D.5 - PROGRESSION FACTORS & ACTUATED SIGNAL PARAMETERS

Mov No.	Control	Coord.	Arrival Type	Delay Prog. Factor	Queue Prog. Factor	Gap Settings es	Gap Settings eh	Disp. Grn. Settings 1st Grn Gmin	1st Grn Gmax	2nd Grn Gmin	2nd Grn Gmax
West: PR-3 Oeste											
12	VA	No	3	1.000	1.000	2.0	2.6	6	12		
11	VA	No	3	1.000	1.000	2.5	3.1	6	30		
East: PR-3 Este											
21	VA	No	3	1.000	1.000	2.5	3.1	6	30		
23	VA	No	3	1.000	1.000	2.5	3.1	6	30	6	30
North: Centro Comercial Norte											
42	VA	No	3	1.000	1.000	2.0	2.6	6	12		
43	VA	No	3	1.000	1.000	2.5	3.1	6	30	6	30

Sea View II

Int. PR-3 & Acceso a Centro Comercial, Hora Pico PM, 2011 Con Proyecto
Intersection ID: 3

Scaled sensitivity parameter: Maximum Green

Table V.23 - INTERSECTION SUMMARY FOR VARIABLE PARAMETER SCALE

Param Scale (%)	Cycle Time (sec)	Total Veh. Cap.	Intersn Deg. of Satn	Prac. Spare Cap.	Aver. Delay (sec)	Stop Rate	Longest Queue (veh)	Perf. Index	Cost Total $/h
50	58	6618	0.929	-3	20.2	0.71	19.7	124.2	707.9
55	60	6668	0.873	3	20.2	0.70	20.7	125.4	726.6
60	62	6734	0.827	9	20.0	0.69	21.2	125.9	724.3
65	65	6699	0.933	-4	20.1	0.69	21.7	127.4	706.1
70	66	6700	0.930	-3	20.5	0.69	22.3	128.7	709.8
75	69	6701	0.956	-6	20.5	0.68	23.4	129.8	731.4
80	71	6714	0.968	-7	20.7	0.68	23.7	131.6	711.5
85	72	6714	0.966	-7	21.0	0.68	24.3	132.8	714.7
90	74	6733	0.978	-8	21.0	0.68	24.7	133.4	713.6
95	76	6707	0.990	-9	21.7	0.68	25.9	136.5	720.6
100	78	6724	1.000	-10	21.8	0.68	26.3	137.3	721.3
105	80	6739	1.000	-10	21.8	0.68	26.7	138.0	721.6
110	82	6754	1.000	-10	21.9	0.67	27.1	138.9	722.5
115	84	6728	1.000	-10	22.9	0.68	28.3	142.4	731.6
120	86	6742	1.000	-10	22.9	0.67	28.7	143.1	731.8

--- End of aaSIDRA Output ---

Total flow period = 60 minutes. Peak flow period = 15 minutes.

Queue values in this table are 95% back of queue (feet).

Note: Basic Saturation Flows are not adjusted at roundabouts or sign-controlled intersections and apply only to continuous lanes.

Sea View II
Acceso Este, Hora Pico AM 2011
Intersection ID: A1
Stop Sign Controlled Intersection

Table S.15 - CAPACITY AND LEVEL OF SERVICE

Mov No.	Mov Typ	Total Flow (veh /h)	Total Cap. (veh /h)	Deg. of Satn (v/c)	Aver. Delay (sec)	LOS
West: Sea View Oeste						
12	L	26	128	0.203	11.4	B
13	R	273	1340	0.204*	11.1	B
		299	1468	0.204	11.2	B
South: PR-925 Sur						
32	LT	210	2710	0.077	2.8	A
		210	2710	0.077	2.8	A
North: PR-925 Norte						
42	T	242	1840	0.132	0.0	A
43	R	6	46	0.130	9.6	A
		248	1886	0.132	0.2	A
ALL VEHICLES:		757	6645	0.204	5.3	A

Level of Service calculations are based on average control delay including geometric delay (HCM criteria), independent of the current delay definition used.
For the criteria, refer to the "Level of Service" topic in the aaSIDRA Output Guide or the Output section of the on-line help.

* Maximum v/c ratio, or critical green periods

--- End of aaSIDRA Output ---

Akcelik & Associates Pty Ltd - aaSIDRA 2.0.0.205

Servicios Técnicos Integrados
Francisco J. Reyes Registered User No. 50310
Licence Type: Professional, Single Computer

Time and Date of Analysis 5:17 PM, May 4,2009

Filename: F:\My Documents\Francisco\Consultores\April\Humacao\Sea View II\Sidra\PR-925-Acc1-11PM.OUT

Sea View II
Acceso Este, Hora Pico PM 2011
Intersection ID: A1

aaTraffic SIDRA US Highway Capacity Manual (2000) Version

RUN INFORMATION

* Basic Parameters:
  Intersection Type: Unsignalised - Two-Way Stop Control
  Driving on the right-hand side of the road
  Input data specified in US units
  Default Values File No. 11
  Peak flow period (for performance): 15 minutes
  Unit time (for volumes): 60 minutes (Total Flow Period)
  Delay definition: Control delay
  Geometric delay included
  HCM Delay and Queue Models option selected
  Level of Service based on: Delay (HCM method)
  Queue definition: Back of queue, 95th Percentile

Sea View II
Acceso Este, Hora Pico PM 2011
Intersection ID: A1
Stop Sign Controlled Intersection

Table S.3 - INTERSECTION PARAMETERS

Intersection Level of Service	=	A
Worst movement Level of Service	=	B
Average intersection delay (s)	=	5.3
Largest average movement delay (s)	=	10.2
Largest back of queue, 95% (ft)	=	27
Performance Index	=	12.06
Degree of saturation (highest)	=	0.185
Practical Spare Capacity (lowest)	=	334 %
Total vehicle capacity, all lanes (veh/h)	=	6744
Total vehicle flow (veh/h)	=	814
Total person flow (pers/h)	=	977
Total vehicle delay (veh-h/h)	=	1.19
Total person delay (pers-h/h)	=	1.43

Total effective vehicle stops (veh/h)	=	311
Total effective person stops (pers/h)	=	373
Total vehicle travel (veh-mi/h)	=	338.3
Total cost ($/h)	=	129.37
Total fuel (ga/h)	=	14.5
Total CO2 (kg/h)	=	137.65

Sea View II
Acceso Este, Hora Pico PM 2011
Intersection ID: A1
Stop Sign Controlled Intersection

Table S.6 - INTERSECTION PERFORMANCE

Total Flow (veh/h)	Deg. Satn x	Total Delay (veh-h/h)	Total Delay (pers-h/h)	Aver. Delay (sec)	Prop. Queued	Eff. Stop Rate	Longest Queue (ft)	Perf. Index	Aver. Speed (mph)
INTERSECTION (persons):									
977	0.185		1.43	5.3	0.165	0.38		12.06	54.9

Queue values in this table are 95% back of queue (feet).

Sea View II
Acceso Este, Hora Pico PM 2011
Intersection ID: A1
Stop Sign Controlled Intersection

Table S.7 - LANE PERFORMANCE

Lane No.	Mov No.	Dem Flow (veh /h)	Cap (veh /h)	Deg. Satn x	Aver. Delay (sec)	Eff. Stop Rate	Queue 95% Back (vehs)	Queue 95% Back (ft)	Short Lane (ft)
West: Sea View Oeste									
1 LR	12, 13	69	761	0.090	10.2	0.86	0.6	14	
2 R	13	75	835	0.090	9.7	0.85	0.6	14	160
South: PR-925 Sur									
1 L	32	260	1409	0.185	10.1	0.66	1.1	27	
2 T	32	221	1913	0.116	0.0	0.00	0.0	0	
North: PR-925 Norte									
1 TR	42, 43	189	1826	0.104	1.2	0.09	0.0	0	

Sea View II
Acceso Este, Hora Pico PM 2011
Intersection ID: A1

Stop Sign Controlled Intersection

Table S.10 - MOVEMENT CAPACITY AND PERFORMANCE SUMMARY

Mov No.	Mov Typ	Dem Flow (veh /h)	Total Cap. (veh /h)	Lane Util (%)	Deg. Satn x	Aver. Delay (sec)	Eff. Stop Rate	95% Back of Queue (veh)	Perf. Index
West: Sea View Oeste									
12	L	12	133	100	0.090	10.2	0.93	0.6	0.25
13	R	132	1463	100	0.090	9.9	0.84	0.6	2.67
South: PR-925 Sur									
32	LT	481	2607	63	0.185*	5.5	0.36	1.1	7.02
North: PR-925 Norte									
42	T	166	1603	100	0.104	0.0	0.00	0.0	1.73
43	R	23	222	100	0.104	9.6	0.72	0.0	0.39

* Maximum degree of saturation

Sea View II
Acceso Este, Hora Pico PM 2011
Intersection ID: A1
Stop Sign Controlled Intersection

Table S.14 - SUMMARY OF INPUT AND OUTPUT DATA

Lane No.	Demand Flow (veh/h) L	T	R	Tot	%HV	Adj. Basic Satf.	Eff Grn (secs) 1st	2nd	Deg Sat x	Aver. Delay (sec)	Longest Queue (ft)	Shrt Lane (ft)
West: Sea View Oeste												
1 LR	12		57	69	0				0.090	10.2	14	
2 R			75	75	0				0.090	9.7	14	160
	12	0	132	144	0				0.090	10.0	14	
South: PR-925 Sur												
1 L	260			260	0				0.185	10.1	27	
2 T		221		221	5				0.116	0.0	0	
	260	221	0	481	2				0.185	5.5	27	
North: PR-925 Norte												
1 TR		166	23	189	7				0.104	1.2	0	
	0	166	23	189	7				0.104	1.2		

ALL VEHICLES	Total Flow	% HV	Max X	Aver. Delay	Max Queue
	814	3	0.185	5.3	27

==========

Total flow period = 60 minutes. Peak flow period = 15 minutes.

Queue values in this table are 95% back of queue (feet).

Note: Basic Saturation Flows are not adjusted at roundabouts or sign-controlled intersections and apply only to continuous lanes.

Sea View II
Acceso Este, Hora Pico PM 2011
Intersection ID: A1
Stop Sign Controlled Intersection

Table S.15 - CAPACITY AND LEVEL OF SERVICE

Mov No.	Mov Typ	Total Flow (veh /h)	Total Cap. (veh /h)	Deg. of Satn (v/c)	Aver. Delay (sec)	LOS
West: Sea View Oeste						
12	L	12	133	0.090	10.2	B
13	R	132	1463	0.090	9.9	A
		144	1596	0.090	10.0	A
South: PR-925 Sur						
32	LT	481	2607	0.185*	5.5	A
		481	2607	0.185	5.5	A
North: PR-925 Norte						
42	T	166	1603	0.104	0.0	A
43	R	23	222	0.104	9.6	A
		189	1825	0.104	1.2	A
ALL VEHICLES:		814	6744	0.185	5.3	A

Level of Service calculations are based on average control delay including geometric delay (HCM criteria), independent of the current delay definition used.
For the criteria, refer to the "Level of Service" topic in the aaSIDRA Output Guide or the Output section of the on-line help.

* Maximum v/c ratio, or critical green periods

--- End of aaSIDRA Output ---

Akcelik & Associates Pty Ltd - aaSIDRA 2.0.0.205

Servicios Técnicos Integrados
Francisco J. Reyes Registered User No. 50310
Licence Type: Professional, Single Computer

Time and Date of Analysis 5:20 PM, May 4,2009

Filename: F:\My Documents\Francisco\Consultores\April\Humacao\Sea View II\Sidra\PR-925-Acc2-11AM.OUT

Sea View II
PR-925 & Oeste, Hora Pico AM, 2011
Intersection ID: A2

aaTraffic SIDRA US Highway Capacity Manual (2000) Version

RUN INFORMATION

* Basic Parameters:
  Intersection Type: Unsignalised - Two-Way Stop Control
  Driving on the right-hand side of the road
  Input data specified in US units
  Default Values File No. 11
  Peak flow period (for performance): 15 minutes
  Unit time (for volumes): 60 minutes (Total Flow Period)
  Delay definition: Control delay
  Geometric delay included
  HCM Delay and Queue Models option selected
  Level of Service based on: Delay (HCM method)
  Queue definition: Back of queue, 95th Percentile

Sea View II
PR-925 & Oeste, Hora Pico AM, 2011
Intersection ID: A2
Stop Sign Controlled Intersection

Table S.3 - INTERSECTION PARAMETERS

Intersection Level of Service	=	A
Worst movement Level of Service	=	F
Average intersection delay (s)	=	9.5
Largest average movement delay (s)	=	53.2
Largest back of queue, 95% (ft)	=	177
Performance Index	=	23.41
Degree of saturation (highest)	=	0.765
Practical Spare Capacity (lowest)	=	5 %
Total vehicle capacity, all lanes (veh/h)	=	3974
Total vehicle flow (veh/h)	=	1394
Total person flow (pers/h)	=	1673
Total vehicle delay (veh-h/h)	=	3.66
Total person delay (pers-h/h)	=	4.39

Total effective vehicle stops (veh/h)	=	287
Total effective person stops (pers/h)	=	344
Total vehicle travel (veh-mi/h)	=	580.8
Total cost ($/h)	=	225.63
Total fuel (ga/h)	=	23.9
Total CO2 (kg/h)	=	226.12

Sea View II
PR-925 & Oeste, Hora Pico AM, 2011
Intersection ID: A2
Stop Sign Controlled Intersection

Table S.6 - INTERSECTION PERFORMANCE

Total Flow (veh/h)	Deg. Satn x	Total Delay (veh-h/h)	Total Delay (pers-h/h)	Aver. Delay (sec)	Prop. Queued	Eff. Stop Rate	Longest Queue (ft)	Perf. Index	Aver. Speed (mph)
INTERSECTION (persons):									
1673	0.765		4.39	9.5	0.405	0.21		23.41	49.9

Queue values in this table are 95% back of queue (feet).

Sea View II
PR-925 & Oeste, Hora Pico AM, 2011
Intersection ID: A2
Stop Sign Controlled Intersection

Table S.7 - LANE PERFORMANCE

Lane No.	Mov No.	Dem Flow (veh /h)	Cap (veh /h)	Deg. Satn x	Aver. Delay (sec)	Eff. Stop Rate	Queue 95% Back (vehs)	Queue 95% Back (ft)	Short Lane (ft)
South: PR-925 Sur									
1 TR	32, 33	646	1861	0.347	0.5	0.04	0.0	0	
East: Sea View Este									
1 LR	22, 23	199	260	0.767	53.2	1.28	7.1	177	
North: PR-925 Norte									
1 LT	42	549	1854	0.296	4.1	0.01	4.0	101	

Sea View II
PR-925 & Oeste, Hora Pico AM, 2011
Intersection ID: A2
Stop Sign Controlled Intersection

Note: Basic Saturation Flows are not adjusted at roundabouts or sign-controlled intersections and apply only to continuous lanes.

Sea View II
PR-925 & Oeste, Hora Pico AM, 2011
Intersection ID: A2
Stop Sign Controlled Intersection

Table S.15 - CAPACITY AND LEVEL OF SERVICE

Mov No.	Mov Typ	Total Flow (veh /h)	Total Cap. (veh /h)	Deg. of Satn (v/c)	Aver. Delay (sec)	LOS
South: PR-925 Sur						
32	T	609	1754	0.347	0.0	A
33	R	37	107	0.346	9.6	A
		646	1861	0.347	0.5	A
East: Sea View Este						
22	L	173	226	0.765*	53.2	F
23	R	26	34	0.765*	53.2	F
		199	260	0.765	53.2	F
North: PR-925 Norte						
42	LT	549	1854	0.296	4.1	A
		549	1854	0.296	4.1	A
ALL VEHICLES:		1394	3974	0.765	9.5	A

Level of Service calculations are based on average control delay including geometric delay (HCM criteria), independent of the current delay definition used.
For the criteria, refer to the "Level of Service" topic in the aaSIDRA Output Guide or the Output section of the on-line help.

* Maximum v/c ratio, or critical green periods

--- End of aaSIDRA Output ---

Akcelik & Associates Pty Ltd - aaSIDRA 2.0.0.205

Servicios Técnicos Integrados
Francisco J. Reyes Registered User No. 50310
Licence Type: Professional, Single Computer

Time and Date of Analysis 5:22 PM, May 4,2009

Filename: F:\My Documents\Francisco\Consultores\April\Humacao\Sea View II\Sidra\PR-925-Acc2-11PM.OUT

Sea View II
PR-925 & Oeste, Hora Pico PM, 2011
Intersection ID: A2

aaTraffic SIDRA US Highway Capacity Manual (2000) Version

RUN INFORMATION

* Basic Parameters:
  Intersection Type: Unsignalised - Two-Way Stop Control
  Driving on the right-hand side of the road
  Input data specified in US units
  Default Values File No. 11
  Peak flow period (for performance): 15 minutes
  Unit time (for volumes): 60 minutes (Total Flow Period)
  Delay definition: Control delay
  Geometric delay included
  HCM Delay and Queue Models option selected
  Level of Service based on: Delay (HCM method)
  Queue definition: Back of queue, 95th Percentile

Sea View II
PR-925 & Oeste, Hora Pico PM, 2011
Intersection ID: A2
Stop Sign Controlled Intersection

Table S.3 - INTERSECTION PARAMETERS

Intersection Level of Service	=	A
Worst movement Level of Service	=	D
Average intersection delay (s)	=	4.4
Largest average movement delay (s)	=	25.1
Largest back of queue, 95% (ft)	=	65
Performance Index	=	18.08
Degree of saturation (highest)	=	0.473
Practical Spare Capacity (lowest)	=	69
Total vehicle capacity, all lanes (veh/h)	=	3787
Total vehicle flow (veh/h)	=	1310
Total person flow (pers/h)	=	1572
Total vehicle delay (veh-h/h)	=	1.59
Total person delay (pers-h/h)	=	1.91

Total effective vehicle stops (veh/h)	=	241
Total effective person stops (pers/h)	=	289
Total vehicle travel (veh-mi/h)	=	545.6
Total cost ($/h)	=	195.80
Total fuel (ga/h)	=	22.0
Total CO2 (kg/h)	=	207.97

Sea View II
PR-925 & Oeste, Hora Pico PM, 2011
Intersection ID: A2
Stop Sign Controlled Intersection

Table S.6 - INTERSECTION PERFORMANCE

Total Flow (veh/h)	Deg. Satn x	Total Delay (veh-h/h)	Total Delay (pers-h/h)	Aver. Delay (sec)	Prop. Queued	Eff. Stop Rate	Longest Queue (ft)	Perf. Index	Aver. Speed (mph)
INTERSECTION (persons):									
1572	0.473		1.91	4.4	0.249	0.18		18.08	56.5

Queue values in this table are 95% back of queue (feet).

Sea View II
PR-925 & Oeste, Hora Pico PM, 2011
Intersection ID: A2
Stop Sign Controlled Intersection

Table S.7 - LANE PERFORMANCE

Lane No.	Mov No.	Dem Flow (veh /h)	Cap (veh /h)	Deg. Satn x	Aver. Delay (sec)	Eff. Stop Rate	Queue 95% Back (vehs)	Queue 95% Back (ft)	Short Lane (ft)
South: PR-925 Sur									
1 TR	32, 33	836	1768	0.473	1.9	0.14	0.0	0	
East: Sea View Este									
1 LR	22, 23	96	274	0.351	25.1	1.06	2.2	54	
North: PR-925 Norte									
1 LT	42	378	1744	0.217	4.6	0.06	2.6	65	

Sea View II
PR-925 & Oeste, Hora Pico PM, 2011
Intersection ID: A2
Stop Sign Controlled Intersection

Table S.10 - MOVEMENT CAPACITY AND PERFORMANCE SUMMARY

Mov No.	Mov Typ	Dem Flow (veh /h)	Total Cap. (veh /h)	Lane Util (%)	Deg. Satn x	Aver. Delay (sec)	Eff. Stop Rate	95% Back of Queue (veh)	Perf. Index
South: PR-925 Sur									
32	T	670	1417	100	0.473*	0.0	0.00	0.0	6.99
33	R	166	351	100	0.473*	9.6	0.72	0.0	2.82
East: Sea View Este									
22	L	84	240	100	0.350	25.1	1.06	2.2	2.55
23	R	12	34	100	0.353	25.1	1.06	2.2	0.36
North: PR-925 Norte									
42	LT	378	1744	100	0.217	4.6	0.06	2.6	5.36

* Maximum degree of saturation

Sea View II
PR-925 & Oeste, Hora Pico PM, 2011
Intersection ID: A2
Stop Sign Controlled Intersection

Table S.14 - SUMMARY OF INPUT AND OUTPUT DATA

Lane No.	Demand Flow (veh/h) L	T	R	Tot	%HV	Adj. Basic Satf.	Eff Grn (secs) 1st	2nd	Deg Sat x	Aver. Delay (sec)	Longest Queue (ft)	Shrt Lane (ft)
South: PR-925 Sur												
1 TR		670	166	836	4				0.473	1.9	0	
	0	670	166	836	4				0.473	1.9		
East: Sea View Este												
1 LR	84		12	96	0				0.351	25.1	54	
	84	0	12	96	0				0.351	25.1	54	
North: PR-925 Norte												
1 LT	23	355		378	1				0.217	4.6	65	
	23	355	0	378	1				0.217	4.6	65	

ALL VEHICLES	Total Flow	% HV	Max X	Aver. Delay	Max Queue
	1310	3	0.473	4.4	65

Total flow period = 60 minutes. Peak flow period = 15 minutes.

Queue values in this table are 95% back of queue (feet).

Table S.10 - MOVEMENT CAPACITY AND PERFORMANCE SUMMARY

Mov No.	Mov Typ	Dem Flow (veh /h)	Total Cap. (veh /h)	Lane Util (%)	Deg. Satn x	Aver. Delay (sec)	Eff. Stop Rate	95% Back of Queue (veh)	Perf. Index
South: PR-925 Sur									
32	T	670	1417	100	0.473*	0.0	0.00	0.0	6.99
33	R	166	351	100	0.473*	9.6	0.72	0.0	2.82
East: Sea View Este									
22	L	84	240	100	0.350	25.1	1.06	2.2	2.55
23	R	12	34	100	0.353	25.1	1.06	2.2	0.36
North: PR-925 Norte									
42	LT	378	1744	100	0.217	4.6	0.06	2.6	5.36

* Maximum degree of saturation

Sea View II
PR-925 & Oeste, Hora Pico PM, 2011
Intersection ID: A2
Stop Sign Controlled Intersection

Table S.14 - SUMMARY OF INPUT AND OUTPUT DATA

Lane No.	Demand Flow (veh/h) L	T	R	Tot	%HV	Adj. Basic Satf.	Eff Grn (secs) 1st	2nd	Deg Sat x	Aver. Delay (sec)	Longest Queue (ft)	Shrt Lane (ft)
South: PR-925 Sur												
1 TR		670	166	836	4				0.473	1.9	0	
	0	670	166	836	4				0.473	1.9		
East: Sea View Este												
1 LR	84		12	96	0				0.351	25.1	54	
	84	0	12	96	0				0.351	25.1	54	
North: PR-925 Norte												
1 LT	23	355		378	1				0.217	4.6	65	
	23	355	0	378	1				0.217	4.6	65	

ALL VEHICLES	Total Flow	% HV	Max X	Aver. Delay	Max Queue
	1310	3	0.473	4.4	65

Total flow period = 60 minutes. Peak flow period = 15 minutes.

Queue values in this table are 95% back of queue (feet).

Note: Basic Saturation Flows are not adjusted at roundabouts or sign-controlled intersections and apply only to continuous lanes.

Sea View II
PR-925 & Oeste, Hora Pico PM, 2011
Intersection ID: A2
Stop Sign Controlled Intersection

Table S.15 - CAPACITY AND LEVEL OF SERVICE

Mov No.	Mov Typ	Total Flow (veh /h)	Total Cap. (veh /h)	Deg. of Satn (v/c)	Aver. Delay (sec)	LOS
South: PR-925 Sur						
32	T	670	1417	0.473*	0.0	A
33	R	166	351	0.473*	9.6	A
		836	1768	0.473	1.9	A
East: Sea View Este						
22	L	84	240	0.350	25.1	D
23	R	12	34	0.353	25.1	D
		96	274	0.353	25.1	D
North: PR-925 Norte						
42	LT	378	1744	0.217	4.6	A
		378	1744	0.217	4.6	A
ALL VEHICLES:		1310	3787	0.473	4.4	A

Level of Service calculations are based on average control delay including geometric delay (HCM criteria), independent of the current delay definition used.
For the criteria, refer to the "Level of Service" topic in the aaSIDRA Output Guide or the Output section of the on-line help.

* Maximum v/c ratio, or critical green periods

--- End of aaSIDRA Output ---

Akcelik & Associates Pty Ltd - aaSIDRA 2.0.0.205

Servicios Técnicos Integrados
Francisco J. Reyes Registered User No. 50310
Licence Type: Professional, Single Computer

Time and Date of Analysis 8:09 PM, May 4,2009

Filename: F:\My Documents\Francisco\Consultores\April\Humacao\Sea View II\Sidra\PR-925-Acc1-11AM.OUT

Sea View II
Acceso Este, Hora Pico AM 2011
Intersection ID: A1

aaTraffic SIDRA US Highway Capacity Manual (2000) Version

RUN INFORMATION

* Basic Parameters:
  Intersection Type: Unsignalised - Two-Way Stop Control
  Driving on the right-hand side of the road
  Input data specified in US units
  Default Values File No. 11
  Peak flow period (for performance): 15 minutes
  Unit time (for volumes): 60 minutes (Total Flow Period)
  Delay definition: Control delay
  Geometric delay included
  HCM Delay and Queue Models option selected
  Level of Service based on: Delay (HCM method)
  Queue definition: Back of queue, 95th Percentile

Sea View II
Acceso Este, Hora Pico AM 2011
Intersection ID: A1
Stop Sign Controlled Intersection

Table S.3 - INTERSECTION PARAMETERS

Intersection Level of Service	=	A
Worst movement Level of Service	=	B
Average intersection delay (s)	=	5.3
Largest average movement delay (s)	=	11.4
Largest back of queue, 95% (ft)	=	34
Performance Index	=	11.59
Degree of saturation (highest)	=	0.204
Practical Spare Capacity (lowest)	=	293
Total vehicle capacity, all lanes (veh/h)	=	6645
Total vehicle flow (veh/h)	=	757
Total person flow (pers/h)	=	908
Total vehicle delay (veh-h/h)	=	1.11
Total person delay (pers-h/h)	=	1.33

Total effective vehicle stops (veh/h)	=	306
Total effective person stops (pers/h)	=	367
Total vehicle travel (veh-mi/h)	=	314.6
Total cost ($/h)	=	121.79
Total fuel (ga/h)	=	13.3
Total CO2 (kg/h)	=	125.89

Sea View II
Acceso Este, Hora Pico AM 2011
Intersection ID: A1
Stop Sign Controlled Intersection

Table S.6 - INTERSECTION PERFORMANCE

Total Flow (veh/h)	Deg. Satn x	Total Delay (veh-h/h)	Total Delay (pers-h/h)	Aver. Delay (sec)	Prop. Queued	Eff. Stop Rate	Longest Queue (ft)	Perf. Index	Aver. Speed (mph)
INTERSECTION (persons):									
908	0.204		1.33	5.3	0.225	0.40		11.59	53.6

Queue values in this table are 95% back of queue (feet).

Sea View II
Acceso Este, Hora Pico AM 2011
Intersection ID: A1
Stop Sign Controlled Intersection

Table S.7 - LANE PERFORMANCE

Lane No.	Mov No.	Dem Flow (veh /h)	Cap (veh /h)	Deg. Satn x	Aver. Delay (sec)	Eff. Stop Rate	Queue 95% Back (vehs)	Queue 95% Back (ft)	Short Lane (ft)
West: Sea View Oeste									
1 LR	12, 13	144	708	0.204	11.4	0.89	1.3	33	
2 R	13	155	760	0.204	10.9	0.88	1.3	34	160
South: PR-925 Sur									
1 L	32	57	1318	0.043	10.3	0.65	0.2	6	
2 T	32	153	1974	0.078	0.0	0.00	0.0	0	
North: PR-925 Norte									
1 TR	42, 43	248	1886	0.132	0.2	0.02	0.0	0	

Sea View II
Acceso Este, Hora Pico AM 2011
Intersection ID: A1

Apéndice I

Estudio de Ruido

ESTUDIO DE IMPACTOS POR RUIDO

PROYECTO SEA VIEW II

CONSULTA 2003-51-0642-JPU

HUMACAO, PUERTO RICO

Preparado para:

GL Morris Engineering

Preparado por:

Moreno Associates

JUNIO 2009

ESTUDIO DE IMPACTOS POR RUIDO

EVALUACION DE IMPACTOS DEBIDO AL RUIDO

PARA

CONSTRUCCION DE PROYECTO RESIDENCIAL

SEA VIEW II

CONSULTA DE UBICACION 2003-51-0642-JPU

INTERSECCION CARRETERAS ESTATALES PR-3/PR-925

BARRIOS ANTON RUIZ Y RIO ABAJO

HUMACAO, PUERTO RICO

JUNIO 2009

TABLA DE CONTENIDO

	Página
1.0 Introducción	**1**
1.1 Descripción del proyecto	**3**
1.2 Propósito de la evaluación	**5**
2.0 Análisis de la información	**6**
3.0 Criterios de evaluación y resultados de modelaje	**8**
4.0 Conclusiones y/o recomendaciones	**18**
5.0 Certificación	**18**

Apéndices

1	**Copia de cartas de la ACT solicitando el Estudio de Ruido**
2	**Copia de plano conceptual del proyecto**
3	**Fotos del área del proyecto**
4	**Copia de Certificado de calibración del sonómetro**
5	**Copia de datos de tránsito obtenidos de la ACT**
6	**Copia de corridas de modelo Stamina**

1.0 Introducción

Se propone el desarrollo de un proyecto residencial multifamiliar de unidades tipo "walk down" y "walk up" de tres (3) plantas, en los Barrios Antón Ruiz y Río Abajo del municipio de Humacao. El desarrollo objeto de este estudio, consta de un total de 720 unidades de vivienda distribuídas en nueve (9) grupos o "clusters". La finca en donde se ubica el proyecto tiene una cabida total de 450.7727 cuerdas. El acceso a la finca del proyecto se realiza a través de la carretera estatal **PR-925**, muy cercana a su intersección con la **PR-3**. Al presente, la finca se encuentra baldía y posee una topografía muy accidentada. Esta característica resulta en una vista espectacular de la Reserva de Humacao que es administrada por el **Departamento de Recursos Naturales y Ambientales (DRNA)** y la costa sureste de Puerto Rico, así como los islotes cercanos. Para viabilizar la construcción del proyecto, éste fue sometido para la consideración de la **Junta de Planificación de Puerto Rico.** Esta agencia, le asignó el número de consulta **2003-51-0642 JPU** para su procesamiento e identificación. Toda la correspondencia relativa al proyecto, se identifica con este número de consulta.

Como parte de los trámites pertinentes a la consulta y los trabajos de planificación, se consultó con la **Autoridad de Carreteras y Transportación (ACT)**. Esta agencia, mediante comunicaciones escritas del 8 de diciembre de 2004 y del 16 de julio de 2008 (ver copia en **Apéndice 1**) solicitó la realización de un Estudio de Sonido Ambiental para determinar los Niveles de Ruido Ambiental a los que estarán expuestas las viviendas debido al tránsito en la carretera estatales **PR-3**, **PR-53** y **PR-925**, que se encuentran en los alrededores del proyecto. Se solicita la evaluación de su condición actual y su condición proyectada a 20 años en el futuro. Por tal razón, el propósito de este estudio es analizar la condición de ruido existente en el área el proyecto y de esta manera cumplir con los requerimientos de la **ACT**. De ser necesario, se formularán las recomendaciones de mitigación de ruido que resulten efectivas para minimizar estos impactos sónicos pronosticados.

La localización del proyecto se ilustra en copia del cuadrángulo topográfico de Humacao según publicado por el **Servicio Geológico Federal** (**USGS** por sus siglas en inglés) e identificada como la **figura 1**. Como puede apreciarse, las carreteras estatales **PR-3, PR-53** y la **PR-925** se se constituyen en las vías de acceso terrestre hacia el proyecto y cuya operación pudiera afectar a los futuros residentes del proyecto.

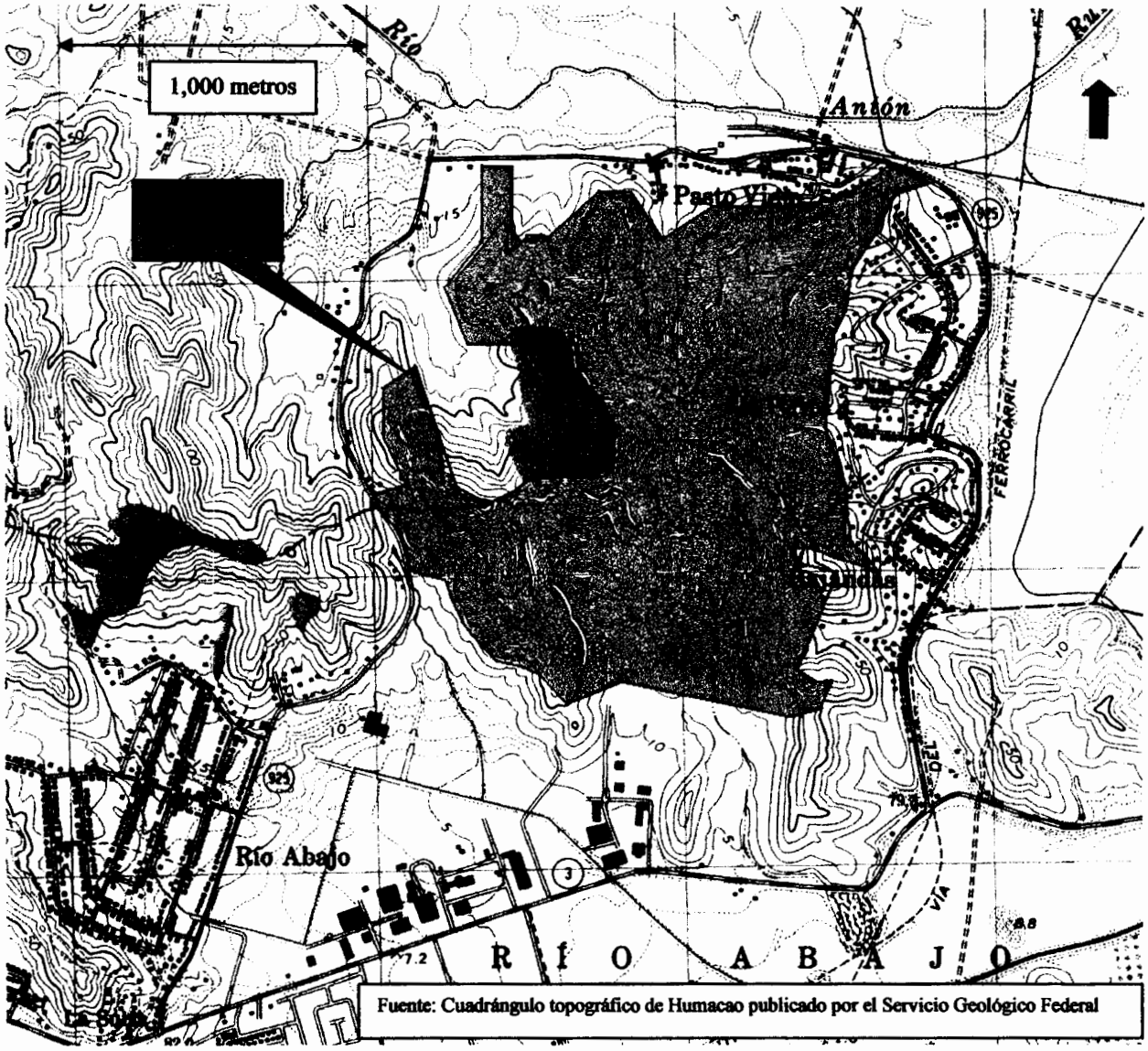

Figura 1
MAPA DE LOCALIZACION

La carretera **PR-53** que se observa hacia el oeste del proyecto, es un expreso con acceso controlado y peaje que discurre en términos generales en dirección norte a sur. Tiene cuatro carriles de 3.65 metros, dos (2) en cada dirección y una mediana amplia entre los carriles. La **PR-3**, es una vía prinicipal de la red estratégica de la Isla que en su intersección con la carretera estatal **PR-925** que sirve de acceso al proyecto, tiene dos carriles de 3.65 metros, uno en cada dirección. No posee mediana alguna en este punto, ni paseos laterales, aunque se debe aclarar que la **PR-3** se ensancha hasta una sección de cuatro (4) carriles, dos (2) en cada dirección, justo después de cruzar el Caño Frontera (cerca de Cuidad Cristiana). Esta vía se localiza hacia el sur del área del proyecto. Finalmente, la carretera estatal **PR-925**, es una vía terciaria que provee acceso local a los residentes de las comunidades Pasto Viejo, Los Perros y Bayandas. Esta vía circunvala al área del proyecto hacia el este, norte y oeste. Es una carretera de dos (2) carriles de aproximadamente 3.0 metros, uno (1) en cada dirección. No tiene paseos laterales ni mediana central. El uso de esta vía está limitada al tránsito local, debido a que no llega a ningún lugar, aparte de las comunidades antes mencionadas.

1.1 Descripción del proyecto

El proyecto según conceptualizado al presente, considera el desarrollo de un total de 720 unidades de vivienda unifamiliares distribuídos en nueve (9) grupos de edificios de tres (3) nieveles. Debido a lo accidentado del terreno, el desarrollo propuesto se propone en la parte alta de los cerros del lugar. Esta práctica tiene dos (2) resultados:

- ✓ Se minimiza el movimiento de tierras necesario para la construcción del proyecto, minimizando los impactos advesos al mediambiente.
- ✓ Permite aprovechar al máximo el recurso visual que tiene el lugar, resultando en un atractivo para la venta del proyecto.

En el **Apéndice 2**, se incluye copia del plano conceptual del proyecto, mientras que en el **Apéndice 3** se incluyen fotos del área del proyecto y de la condición de la carretera estatales antes mencionadas. Por otra parte, en la **figura 2** se ilustra la distribución de clusters dentro de la

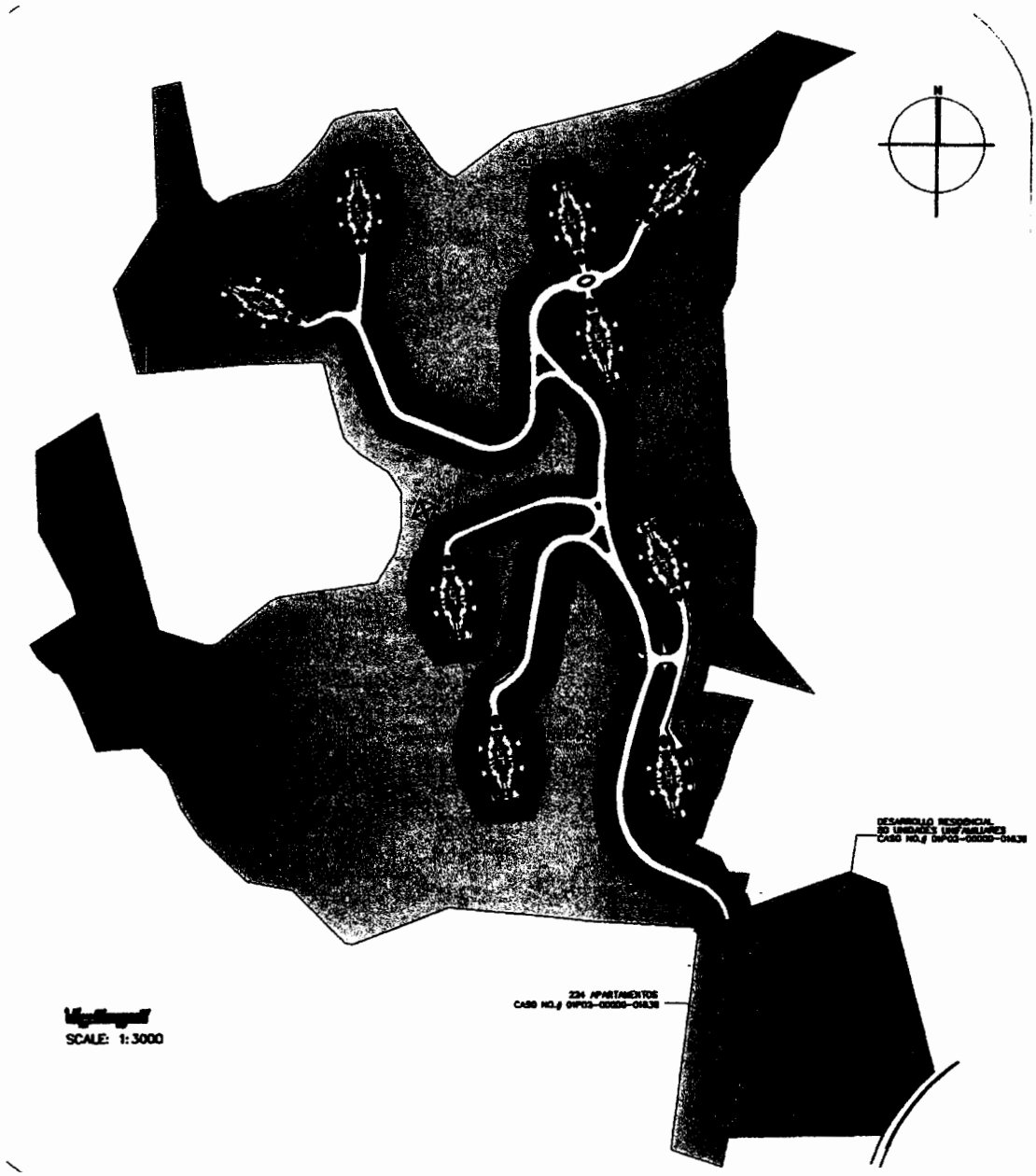

Figura 2

Distribución de clusters residenciales dentro de propiedad

propiedad. El área tiene una topografía sumamente escarpada. La diferencia entre los niveles del lugar en donde se construirán las estructuras varían entre los 23.0 y 108.0 metros con respecto al nivel más alto en la **PR-53**. Esto surge como consecuencia de que el nivel del terreno planificado para los clusters en esta etapa del proyecto han sido definidos de la siguiente manera.

[illegible]	Elevación (en metros sobre el Nivel Medio del Mar)
1	75
2	110
3	90
4	160
5	130
6	110
7	90
8	90
9	110

Para obtener información con respecto a los niveles del terreno en la **PR-53** se utilizó un sistema de posicionamiento global (**GPS** por sus siglas en inglés), el lugar más alto medido en la mencionada vía se encontró en la vecindad de los 51.9 metros sobre el nivel medio del mar.

Basados en estos datos, se puede indicar que las áreas residenciales ha construirse se encontrarán a unos niveles de terreno significativamente más altos que los niveles de las carreteras circundantes. Estos niveles requerirán de la realización de un limitado movimiento de tierra que permitirá preservar la extensa vegetación que existe entre las laderas de los cerros y las carreteras. Esta franja y la separación con respecto a las vías terrestres, contribuirán significativamente a atenuar los niveles de ruido que se generarán en el área.

1.2 Propósito de evaluación

Como se indicara con anterioridad, el propósito de este estudio es el determinar el impacto por ruido, si alguno, que experimentarían los residentes de los residencias más cercanas hacia las carreteras estatales **PR-53**, **PR-3** y **PR-925**. En la eventualidad de que estas áreas se vean

afectadas como resultado del análisis efectuado, se formularán las medidas de mitigación que se estimen pertinentes para aminorar estos impactos. Se utilizarán los criterios comparativos establecidos por la **Agencia Federal de Carreteras** (**FHWA** por sus siglas en inglés), la propia **Autoridad de Carreteras y Transportación** (**ACT**) e información publicada. Se utilizaron también como fuente de información, los planos conceptuales para el proyecto y niveles de la carretera estatal **PR-53** recopilados usando instrumentos de posicionamiento global.

2.0 Análisis de la Información

En primera instancia, se desea comenzar este análisis con la observación del plano de ubicación del proyecto. Del estudio de esta información se desprende que:

- El proyecto, aunque se ubica en una propiedad extensa, sólo utiliza las partes más altas de la finca y por consiguiente alejado de la colindancia de la propiedad.

- Hacia el este del área del proyecto, se encuentran las comunidades Bayandas y Los Perros. De manera más específica, se destaca el hecho de que la propiedad en donde se ubica el proyecto no colinda físicamente con la carretera estatal **PR-925**, la cual es una carretera terciaria con un bajo volumen vehicular según datos obtenidos de la propia **ACT**. Esto, como consecuencia lógica de que la vía no lleva a otro lugar que no sea a los hogares de los residentes de las comunidades antes mencionadas. Las residencias se encuentran a más de 400 metros de la vía.

- Hacia el norte del área del proyecto, se observa la carretera estatal **PR-925** que como se menciona anteriormente se constituye en un acceso local para los residentes del lugar. En esta colindancia, el área residencial propuesta (que corresponde al cluster #8) se encuentra a más de 250 metros de separación de la mencionada vía terciaria.

- Hacia el oeste, se observa la carretera estatal **PR-53** y nuevamente la carretera estatal **PR-925**. En esta colindancia, el cluster # 9, que se constituye en el área residencial más cercana del proyecto hacia las vías antes mencionadas y se encuentra a una distancia estimada de 525 metros de la **PR-925** y 813 metros de la **PR-53** en su parte más hacia el norte de esta colindancia. En esta misma

colindancia, el cluster # 4 se encuentra a una distancia estimada de 630 metros de la **PR-925** y 750 metros de la **PR-53**. El cluster # 3 se encuentra a una distancia similar de ambas vías.

- Hacia el sur de la propiedad, el cluster # 3 se encuenetra a una distancia de más de 700 metros de la **PR-3**. En esta colindacia, es imporante notar el hecho de que existe una zona industrial entre el proyecto y la carrtera.

Como consecuencia del análisis de la ubicación del proyecto con respecto a la vías de transporte terrestre resulta evidente el hecho de que los núcleos residenciales propuestos se encuentran a una distancia que en todos los casos excede los 250 metros con respecto a las carreteras antes mencionadas, y más importante aún, en la parte más cercana del proyecto, este se verifica en una vía terciaria que sirve de acceso a los residentes de las comunidades adyacentes. Es decir, que en términos prácticos el tráfico vehicular de la **PR-925** en este punto es uno local. Este detalle es sumamente importante para la evaluación de este caso, puesto que existen criterios y argumentos que sirven para justificar la no relevancia del impacto debido al ruido en proyectos como este. A continuación se describen cada uno de estos criterios.

- ❖ En la realización de los estudios de análisis de alternativas para la construcción de nuevas carreteras, se define un corredor de aproximadamente 200 metros a ambos lados de la vía que se propone (en el caso de vías alto nivel de acarreo vehicular, es decir vías primarias. En otros casos las distancias son menores.). Es decir, que se reconoce el hecho de que más allá de esta distancia los efectos debido al ruido generado por el tráfico vehicular no es significativo y por tal motivo los estudios de impacto sónico se limitan a esta franja.

- ❖ La Ley # 92 del 26 de agosto de 2005 requiere estudios de ruido para proyectos residenciales que se encuentren a distancias de 50 metros o menos de vías públicas de alto volumen de tránsito. Esta ley no aplica en este caso.

- ❖ La Administración Federal de Carreteras ha publicado información ténica al respecto y en la cual se describe el aspecto del ruido asociado a la operación de las carreteras en todos los Estados Unidos. De manera más específica, en su manual titulado **FHWA Design Manual, Capítulo 3, sección 3.3**, "Acoustical Considerations", se establece que:

"*Atmospheric absorption is a function of the sound, the temperature, the humidity, and the atmspheric pressure between the source and the receiver. Over distances greater than 30 meters (100 feet), the attenuation due to atmospheric absorption can sustantially reduce sound levels, especially at high frequencies (above 5,000 hz).*"

En nuestro caso la distancia es mucho mayor y existe una densa capa vegetal que incrementa la atenuación del ruido entre la carretera y el receptor.

- La **FHWA** también ha publicado un folleto informativo titulado **Highway Traffic Noise** (HEP-41/5-92(5M)EW). En la página 4 de este documento se indica que:

  " *Traffic noise is not usually a serious problem for people who live more than 500 feet (152.4 meters) from heavily traveled freeways or more than 100 (30.4 meters) to 200 (60.97 meters) feet from lighly traveled roads.*"

  Las zonas residenciales a formarse se encuentran a distancias considerablemente mayores a las antes citadas.

A pesar de que la información y análisis realizado indican que no es necesaria la realización de un estudio de ruido para este proyecto, se procedió a realizar un análisis detallado. Se identificaron las areas residenciales que se formarán más cerca de la colindancia oeste en la cual se encuentran la **PR-53** y la **PR-925**. Se seleccionaron localidades que para efectos de este estudio se conocerán como receptores de ruido a lo largo de la colindancia con las carreteras estatales antes mencionadas para realizar el análisis de impacto por ruidos por ser esta la colindancia del proyecto con mayor potencial de ser impactada adversamente por las vías más transitada que es la **PR-53** y la posible interacción con el tráfico vehicular que discurre a través de la **PR-925**. Estos receptores fueron identificados como **SV-1, SV-2, SV-3, y SV-4.** En la **figura 3**, se presenta una ilustración en donde se observa la ubicación de estos receptores.

3.0 Criterios de Evaluación y Resultados de Modelaje

Para fines de caracterizar el ambiente sonoro existente, se realizaron mediciones de ruido en tres (3) localidades diferentes. Los puntos se localizaron en las colindancia hacia la carreteras

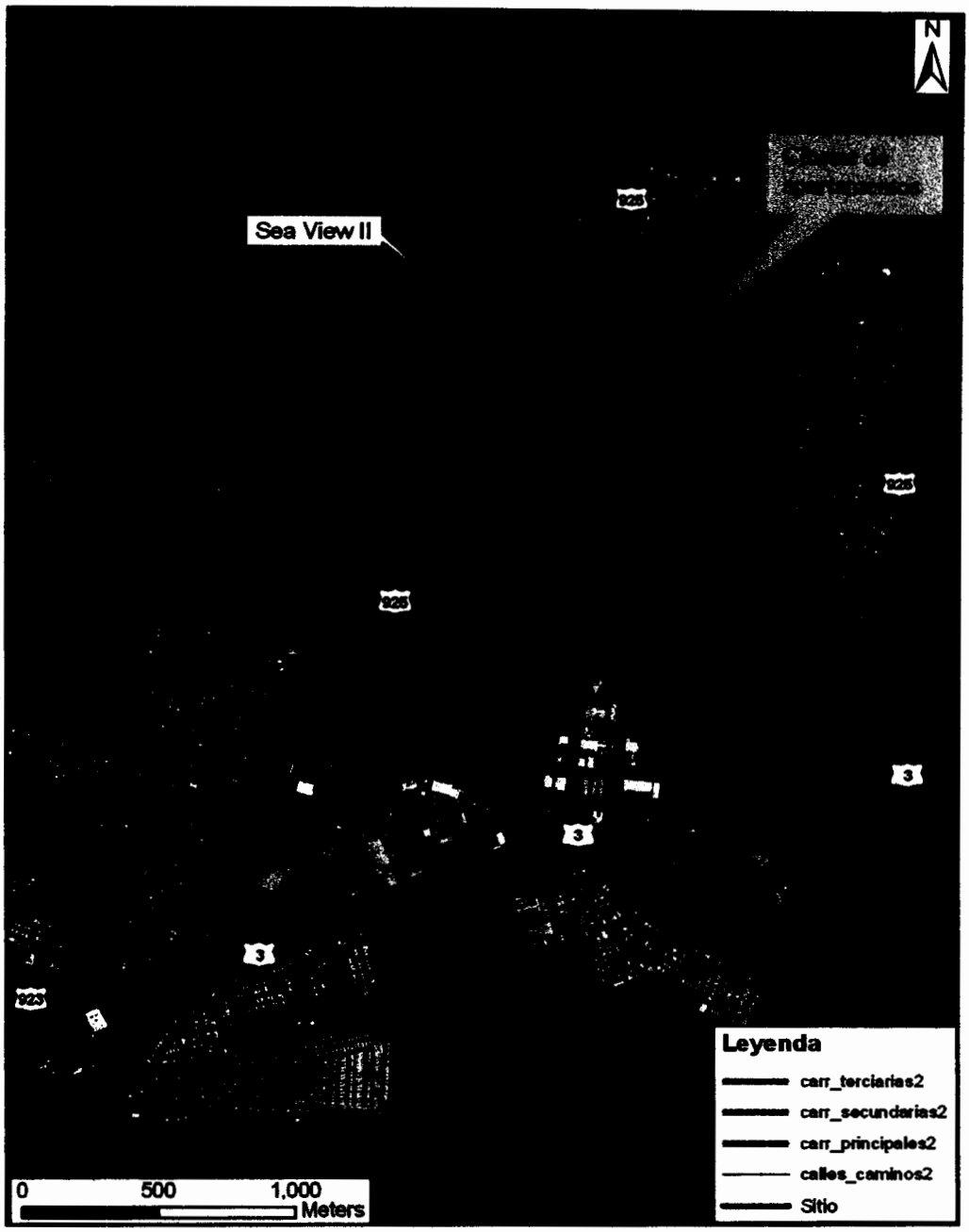

Figura 3

Localización de receptores para modelaje

estatales **PR-53, PR-925** y **PR-3.** Se realizaron mediciones de ruido los días 7 y 8 de mayo de 2009 (entre las 7:50 A.M. y 3:00 P.M.). Estos datos sirven para establecer o cuantificar los posibles impactos. La descripción de estos receptores se incluye a continuación.

Identificación de punto	Comentarios
1	Este lugar se localizó en la colindancia oeste, hacia el norte. Se ubicó cerca de un tanque de almacenamiento de agua potable de la AAA. El mismo se encuentra cercano a lo que serán los clusters # 8 y #9. El lugar se observa a un nivel significativamente más alto que la carretera estatal **PR-925** (estimado en aproximadamente 95 metros). Es un lugar con una vegetación espesa. Es importante señalar que al momento de realizar la medición de ruidos, se percibía vagamente el ruido generado por los vehículos que transitaban por la carretera **PR-925**, no se percibió el ruido de los vehículos a través de la **PR-53**.
2	Este lugar, se localizó hacia la parte más sureña de la colindancia del proyecto hacie el oeste con la carretera **PR-53 y PR-925.** Se localizó cerca de los que será el cluster #3. El tráfico a través de la **PR-3** no se percibía con claridad en el lugar. No obstante, se percibían los ruidos generados por los trabajos en la zona industrial. El punto de monitoría se encuentra a una elevación mucho más alta que la carretera. La vegetación es espesa.
3	Este punto de monitoría se estableció en las cercanías de lo que será el cluster #1. Se encuentra en la colindancia sureste, cerca de la intersección de

la **PR-925** con la **PR-3**. El lugar se encuentra mucho más alto que la carretera. Se encuentra rodeado de vegetación espesa.

En la **figura 4**, se ilustra la localización de los puntos de monitoría de ruido antes descritos.

Antes de continuar, es conveniente repasar algunos términos técnicos referentes al ruido y la forma de medirlo. Se define un decibel, como una unidad de medición de la intensidad del sonido, igual a 20 veces el logaritmo a la base 10 de la razón de presión del sonido, medido a una presión de referencia (20 micropascales). Se utiliza la escala de medición de ruido A, debido a que es la que más se asemeja a la respuesta del oído humano al sonido. Los niveles de ruido expresados en dBA son entonces usados para compararlos con estándares establecidos en proyectos de tráfico vehicular. La Agencia Federal de Carreteras (**FHWA** por sus siglas en inglés) ha desarrollado dichos estándares que como hecho conocido establece que un aumento de un (1) dBA cuando se compara con niveles existentes, no puede ser percibido por el oído humano. Por otra parte, un incremento de tres (3) dBA es apenas perceptible, mientras que un incremento de cinco (5) dBA o más se percibe como un cambio significativo. Un aumento de diez 10 dBA se percibe como la duplicación del nivel de ruido existente. En la **Tabla 1** se resumen los criterios para establecer acciones de mitigación definidos por la **FHWA** y adoptados por la **ACT** localmente.

Los niveles de ruido (L_{10} y Leq) medidos para cada uno de los puntos de monitoría de ruido se presentan a continuación:

Punto de monitoría	**Niveles de ruido L_{10}/L_{eq} medidos (dBA)**
1	48.6/47.0
2	52.1/50.5
3	47.0/44.7

El ruido vehicular no fue notablemente percibido durante el periodo de medición. Los niveles

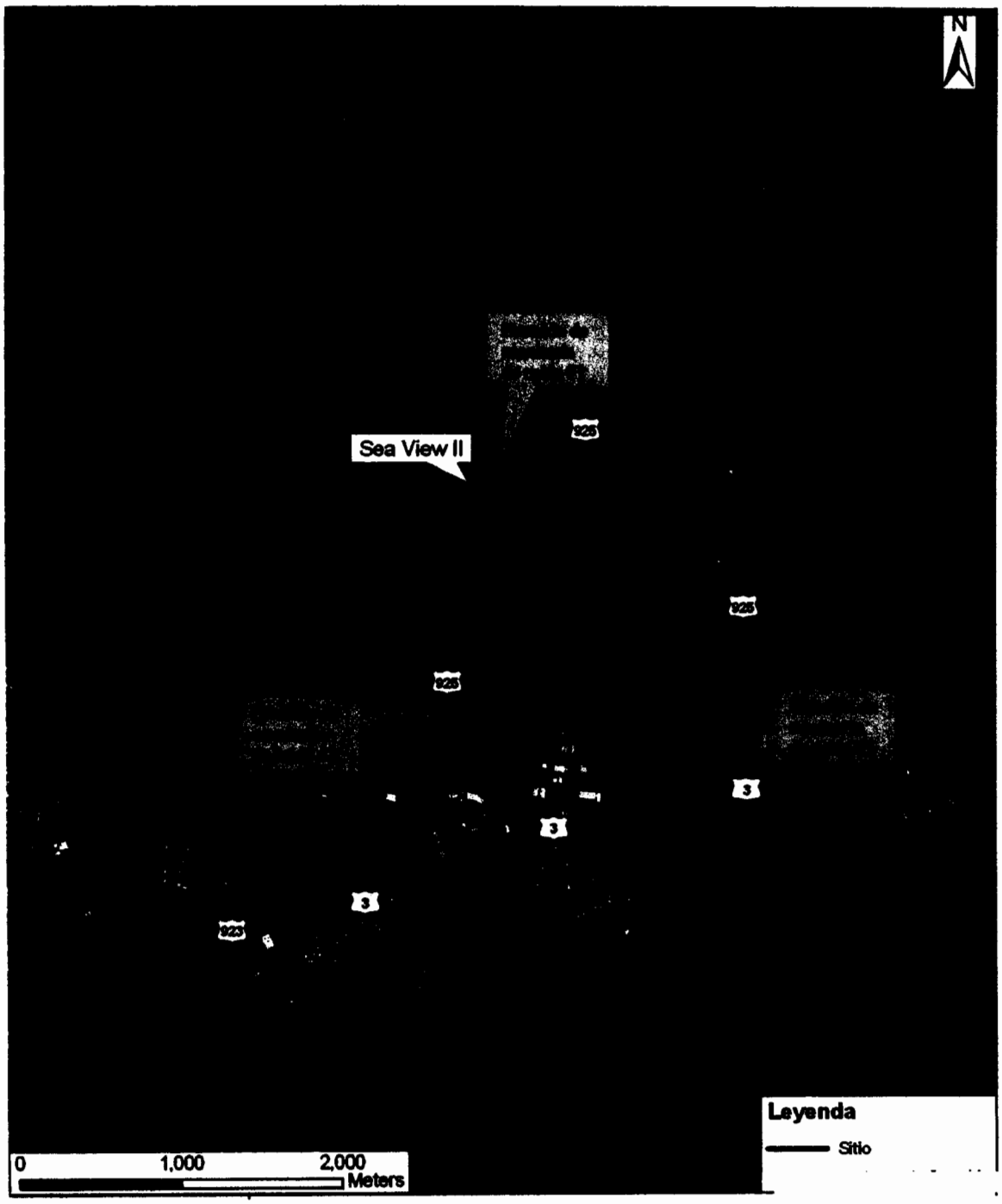

Figura 4

Localización de puntos de monitoría de ruido

Tabla 1: Criterios para Mitigación por Ruido (CMR)
Nivel de sonido en decibeles escala A (dBA)

Categoría de Actividad	L_{eq} (h)	L_{10} (h)	Descripción de actividad en categoría
A	57 (Exterior)	60 (Exterior)	Terrenos en los cuales la serenidad y silencio son de significado extraordinario y sirven a un interés público importante en donde la preservación de estas cualidades es esencial para que el área se mantenga en su uso propuesto
B	67 (Exterior)	70 (Exterior)	Areas de pasadías, áreas recreativas, áreas de juego, áreas para deportes, parques, residencias, moteles, hoteles, escuelas, iglesias, bibliotecas, y hospitales.
C	72 (Exterior)	75 (Exterior)	Areas desarrolladas, propiedades, o actividades no incluídas en las categorías A o B de arriba.
D	–	–	Terrenos sin desarrollar.
E	52 (Interior)	55 (Interior)	Residencias, moteles, hoteles, lugares de reunión públicos, escuelas, iglesias, bibliotecas, hospitales, y auditorios.

Nota: Sólo se pueden usar L_{10}(h) o L_{eq}(h) en un proyecto, pero no ambos.

fueron medidos con un sonómetro marca Quest, modelo 2900, con integrador de datos. Este sonómetro tiene al día su calibración, copia de la cual se incluye en el **Apéndice 5**. La calibración del aparato fue verificada previo a cada evento de medición.

Para poder evaluar los impactos por ruido que recibirán los residentes del proyecto, una vez finalizado el mismo, se utilizó un modelo de predicción de ruido conocido como **Stamina 2.0**. Este modelo, fue desarrollado por la Administración Federal de Carreteras, como una herramienta para pronosticar los impactos por ruido en proyectos de construcción de carreteras. Mediante la utilización del mismo, es posible pronosticar la intensidad del sonido que recibirá un receptor específico con relación a uno o varios segmentos rectos de carretera evaluado, considerados en conjunto como una fuente emisora de ruido. Las características de la fuente emisora, están definidas por el volumen de tránsito que utilicen la vía, la velocidad de los vehículos, tipos de vehículos, y los niveles de emisión de ruido para cada tipo específico de vehículo. Para este estudio, se han considerado los tres (3) tipos de vehículos más comunes en las carreteras de la Isla. Estos son: automóviles, camiones livianos y camiones pesados. El modelo considera además, las características de la trayectoria entre el receptor y la fuente, incluyendo efectos de la topografía, árboles, edificios, barreras y la adsorción atmosférica. Entre los parámetros requeridos para la aplicación del modelo están:

- Datos de tránsito vehicular del área
- Distribución vehicular de tránsito por categorías. Es decir, vehículos pesados, vehículos medianos y automóviles.
- Coordenadas de los segmentos rectos de la carretera a evaluarse (X,Y,Z)
- Velocidad del tráfico en la carretera
- Dimensiones de la carretera
- Características del trayecto entre la carretera y la zona residencial

Antes de comenzar a discutir los resultados de la corrida, es importante señalar que se obtuvieron datos sobre el volumen de tráfico vehicular que pasa por el lugar de la hoja electrónica que mantiene la **Autoridad de Carreteras y Transportación** (ACT). De esta fuente, se obtuvo el dato de que para el 31 de diciembre del 2003, el AADT fue de 19,210 vehículos (ver **Apéndice 5 para detalles**) en plaza de peaje norte de la **PR-53** que se observa hacia el oeste del proyecto. Para poder obtener o proyectar este valor hasta el año 2029, se presumió un factor de crecimiento

anual de 2.0 % para esta carretera primaria. La fórmula utilizada es similar a la que se utiliza para computar el valor futuro de una cantidad de dinero, conociendo el interés (que en este caso sería el factor de crecimiento) y el periodo de tiempo que se desea proyectar. A continuación se presenta el procedimiento utilizado.

$$AADT_{2029} = 19{,}210\,(1 + i)^n$$

en donde:

n= 26 años
i = 2.0 %

El $AADT_{2029}$ se proyecta en 32,138 vehículos por día. De este total, se consideró que un 10% constituirá el flujo vehicular por hora que se utilizó en el modelo. Es decir, que se utilizó un valor de 3,214 vehículos por hora (vph). Además de esta información, la distribución del tipo de vehículos que utilizan la vía se basaron en estudios previos en donde se establece un 3% de tráfico de vehículos pesados, 3% de vehículos medianos y 94% de vehículos livianos o automóviles. En cuanto a la distribución vehicular direccional, se presumió un 60 % del tráfico vehicular transitando hacia la dirección sur a norte (o sea hacia Fajardo), mientras que el 40% se presumió en dirección norte a sur hacia Humacao. Esto resulta en un caso más crítico, puesto que este carril más cercano al proyecto sería el que llevaría el volumen de tráfico mayor. La información con respecto a la elevación de la carretera y los receptores, se tomaron de los planos conceptuales preparados para el proyecto, una foto aérea controlada y los niveles tomados usando el **GPS**. En términos generales, la carretera estatal **PR-53** tiene elevaciones que aumentan gradualmente en dirección norte a sur, justo hasta después de pasar la plaza de peaje, en donde las elevaciones se reducen progresivamente hasta llegar a la **PR-3**. De la misma referencia, se obtuvieron datos de la **PR-925**. Estos datos fueron obtenidos por la **ACT** el 25 de octubre de 2000. El **AADT** para este año fue de 1,984 vehículos. Para llevar este volumen hasta el año 2029 se presumió un aumento anual de 1.0% por ser una carretera terciaria y una distribución vehicular de 95% automóviles, 3% camiones medianos y 2% caminones pesados. Mediante el uso de la fómula antes indicada se estableció que:

$$\mathbf{AADT}_{2029} = 1{,}984\,(1 + i)^n$$

En donde:

n = 29 años
i = 1.0%

De esta manera, se establece que para el año 2029 el **AADT** será de 2,134 vehículos. Utilizando el 10% de este valor para realizar el modelaje obtenemos que el los vehículos por hora transitando por el lugar serán de 213 vehículos. Para esta carrtera se presumió la misma distribución vehicular de 60 % hacia el norte (en colindancia más cercana al proyecto) y 40 % hacia el sur (hacia la **PR-3**). En ambos casos, para la corrida durante el periodo nocturno se presumió que transitaba un 15 % del volumen vehicular que discurre durante el día.

Una vez definidos los parámetros antes mencionados, se realizaron las corridas del modelo en lugares que se identificaron como receptores de ruido, por entenderse que los resultados de la corrida son representativos del ambiente sonoro al cual estarán expuestos los residentes del proyecto. Estos fueron identificados como **SV-1** (frente a cluster #8), **SV-2** (frente a cluster # 9), **SV-3** (frente a cluster # 4) y **SV-4** (frente a cluster # 3). Los resultados de las corridas se incluyen en el **Apéndice 6** de este documento. Para fines de discusión, los resultados de la corrida se han incorporado en la **tabla 2.**

Resultados de modelaje

Como puede observarse de los resultados obtenidos de la corrida sin barreras, no se anticipan niveles de exposición sobre los niveles especificados por la **FHWA** para zonas residenciales expuestas al tráfico vehicular. De hecho, los niveles pronosticados por el modelo son sustancialmente menores al criterio federal. Específicamente, los valores son entre -20.1 y -21.9 dBA más bajos que el límite de 67 dBA. El valor más alto se pronostica en el receptor **SV-2** (localizado cerca del cluster #9 con un valor de 46.9 dBA durante el periodo diurno y 38.9 dBA durante el periodo nocturno. Por otra parte, el valor más bajo se verificó en el punto **SV-1** (que se encuentra cerca del cluster #8) con valor de 43.6 dBA para el periodo diurno y 35.6 dBA para el periodo nocturno.

Si ahora comparamos los niveles obtenidos mediante el uso del modelo con los datos de ruido existente observamos que los niveles de ruido propnosticados lo que indican es que la operación de las carreteras existentes presentan impactos no significativos en el nivel de ruido ambiental existente para el área del proyecto. Si comparamos el valor del nivel de ruido L_{eq} medido en el punto de monitoría #1 (que se localiza cerca del cluster # 9) y que fue de 47.0 dBA y lo comparamos con el nivel de ruido pronosticado en el punto **SV-2** (cerca del cluster #9) observamos que la diferencia entre ambos es de 0.1 dBA. Es

decir, que el nivel de ruido existente es menor de 3 dBA por lo que se puede indicar que el impacto no es significativo.

Los resulados antes descritos permiten afirmar que no es necesario el desarrollo de medidas de mitigación debido a altos niveles de ruido en este proyecto. Más aún, los resultados obtenidos validan los criterios y escritos encontrados en la literatura consultada con respecto al hecho de que las distancias a la que se encontrarán los núcleos residenciales y las carreteras existentes, es substancial y por consiguiente no se requieren medidas de mitigación para el proyecto.

En la tabla 2, se resumen los resultados de las corridas del modelo tanto para el periodo diurno como el periodo nocturno.

Tabla 2: Resultados de corrida de modelo Stamina 2.0
Proyecto Sea View II
Humacao, Puerto Rico

Receptor (Distancia entre borde de carretera y estructura)	Resultado periodo diurno (Leq)	Resultado periodo nocturno (Leq)	Estándar de Administración Federal de Carreteras (FHWA)	Diferencia entre resultado y estándar FHWA (día/noche en dBA)
SV-1 (1,180 metros)	43.6	35.6	67.0	-20.3/-31.4
SV-2 (813 metros)	46.9	38.9	67.0	-20.1/-28.1
SV-3 (740 metros)	45.5	37.5	67.0	-21.5/-29.5
SV-4 (780 metros)	45.1	37.0	67.0	-21.9/-30.0

4.0 Conclusiones y/o recomendaciones

Los resultados de las corridas del modelo Stamina sustentan la aseveración de que no es necesario el desarrollo de medidas de mitigación para atenuar los niveles de ruido que experimentarán los futuros residentes del proyecto Sea View II, localizado entre los Barrios Antón Ruiz y Río Abajo en Humacao, Puerto Rico. Esta aseveración se fundamenta en los niveles de ruido proyectados y obtenidos de las corridas del modelo Stamina, los cuales indican que no se excederán los niveles máximos permitidos para un uso residencial como el propuesto en un horizonte de 20 años. De variarse alguna de consideraciones aquí descritas, será necesario re-evaluar este estudio para atemperarlo a las nuevas condiciones.

5.0 Certificación

Certifico que la información presentada en este estudio, es cierta, correcta, y completa a mi mejor entender y saber. También se certifica que los resultados fueron obtenidos utilizando los criterios de la práctica usual y aceptada para este tipo de estudios. Para la realización del modelaje, se solicitó al dueño información sobre las elevaciones del terreno, copia del estudio de tránsito realizado y la configuración del proyecto. Cualquier cambio en las condiciones aquí descritas, resultará en la necesidad de revisar estos cálculos.

David Moreno Vázquez, P.E.
Lic. 9835

DAVID MORENO VAZQUEZ
INGENIERO LICENCIADO
LIC. 9835
PUERTO RICO

APENDICES

APENDICE 1

Copia de carta de la ACT solicitando el Estudio de Ruido

ESTADO LIBRE ASOCIADO DE PUERTO RICO

AUTORIDAD DE CARRETERAS Y TRANSPORTACION

Ref. C#36359

16 de julio de 2008

Arq. Federico Del Monte
Secretario Auxiliar
Planificación y Servicios Técnicos
Departamento de la Vivienda
PO Box 21365
San Juan, PR 00928-1365

DECLARACIÓN DE IMPACTO AMBIENTAL PRELIMINAR ACTUALIZADA
PROYECTO SEA VIEW II
(720 UNIDADES TIPO "WALK-UP" Y "WALK-DOWN")
INTERSECCIÓN CARRETERAS PR-3 Y PR-925
BARRIOS ANTÓN RUIZ Y RÍO ABAJO, HUMACAO
CONSULTA NÚM.: 2003-51-0642-JPU
CASO NÚM.: 1995-51-0094-CTA

Estimado arquitecto Del Monte:

Hacemos referencia a su comunicación del 29 de abril de 2008, recibida el 2 de julio de 2008, en la Oficina de Control de Accesos de esta Área, relacionada con este asunto.

La Oficina de Estudios Ambientales de esta Autoridad evaluó la Declaración de Impacto Ambiental Preliminar Actualizada (DIA-P), sometida el 2 de julio de 2008, para el proyecto mencionado en el asunto e informó que en nuestra comunicación del 15 de septiembre de 2005 se solicitó al proponente la preparación de un estudio de sonido ambiental para la acción propuesta. Sin embargo, aunque se indicó en la DIA-P que dicho estudio se incluyó en el Apéndice I, el mismo no fue incluido en el documento ambiental sometido a esta Autoridad. Por lo tanto, el proponente deberá preparar dicho estudio, para la evaluación correspondiente.

Además, el estudio de tránsito incluido en dicha DIA-P fue realizado en febrero de 2005, por lo que no cumple con las Guías para la Preparación de Estudios Operacionales de Accesos y de Tránsito para Puerto Rico. Esto debido a que los conteos de tránsito no pueden tener más de un año. Por lo tanto, el proponente deberá preparar un estudio de tránsito actualizado que cumpla con dichas guías.

El Reglamento Núm. 11-001, conocido como "Normas para la Imposición de la Aportación por Concepto de Exacción por Impacto", faculta a la Autoridad de Carreteras y Transportación a establecer un programa de Exacción por Impacto, el cual conlleva que nuevos desarrollos deberán tener participación equitativa de los costos de infraestructura y los usos comunales diseñados para prestar servicio al nuevo crecimiento y desarrollo y así evitar efectos acumulativos negativos sobre la calidad de vida de los desarrollos existentes. Esto trae como consecuencia que el desarrollo de referencia estará sujeto al pago del cargo de exacción por impacto. Dicho cargo será calculado cuando se sometan los estudios y los planos corregidos y se tengan detalles adicionales de la magnitud del proyecto y su impacto a la infraestructura de carretera. Para más detalles relacionados con el cargo de exacción por impacto, deberá comunicarse con el Sr. Renny Parrilla Navarro al 787-721-8787, extensión 2805, los martes y jueves.

Autoridad de Carreteras y Transportación • Departamento de Transportación y Obras Públicas
PO Box 42007 • San Juan, Puerto Rico 00940-2007 Tel. (787) 721-8787 Fax (787) 727-5456

02/04/2009 13:02 7872742150 PLANIFIC PAGE 01/07

La Oficina de Planificación Estratégica de esta Autoridad está evaluando la localización del proyecto mencionado en el asunto, en lo relacionado a proyectos viales a largo plazo, por lo que, posteriormente se le informarán los comentarios de la misma.

Se deberán cumplir con lo demás requisitos y comentarios informados en nuestra comunicación del 5 de febrero de 1996, dirigida al Ing. Enrique Santiago Rodríguez, no enmendados por esta carta y los cuales continúan vigentes.

El proponente deberá someter a la Oficina de Control de Accesos de esta Área dos copias del estudio de tránsito, dos copias del estudio de sonido ambiental y cuatro copias de los planos corregidos de acuerdo a nuestros comentarios y a las recomendaciones de dichos estudios, para la evaluación correspondiente. Las mismas deberán estar firmadas y selladas por un profesional colegiado autorizado.

Esta comunicación tiene vigencia de un año, no constituye una autorización ni endoso para comenzar obra de construcción alguna en el proyecto y aplica al proyecto "Sea View II" de 720 unidades tipo "Walk-Up" y "Walk-Down", a construirse en la propiedad de referencia. Cualquier otro proyecto a desarrollarse en esta propiedad, deberá ser sometido a esta Autoridad para la evaluación y comentarios que apliquen.

Para cualquier aclaración o información adicional relacionada con este asunto, puede comunicarse con la División de Asesoramiento al Proponente de la Oficina de Control de Accesos de esta Área al 787-721-8787, extensión 2805, haciendo referencia al número de control de esta carta. Las llamadas y visitas serán atendidas los días laborables de 8:30 a 11:00 de la mañana y de 1:00 a 2:30 de la tarde.

Cordialmente,

Samuel Forestier Castillo
Director
Área de Ingeniería de Tránsito y Operaciones

5005-JZH-MDR-GAG-dm
Ref. C#36359

Copia: Sr. Teofilo de Jesús Nieves, Director
Área de Asesoramiento Científico
Junta de Calidad Ambiental
PO Box 11488
San Juan, PR 00910

GL Morris Eng.
PO Box 9024157
Old San Juan, PR 00902-4157

ESTADO LIBRE ASOCIADO DE PUERTO RICO

AUTORIDAD DE CARRETERAS Y TRANSPORTACION

8 de diciembre de 2004

Arq. Federico Del Monte
Secretario Auxiliar
Planificación y Servicios Técnicos
Departamento de la Vivienda
PO Box 21365
San Juan, Puerto Rico 00928-1365

DECLARACIÓN DE IMPACTO AMBIENTAL PRELIMINAR
PROYECTO SEA VIEW II
INTERSECCIÓN CARRETERAS PR-3 Y PR-925
BO. ANTÓN RUIZ Y RIO ABAJO
HUMACAO
CONSULTA NÚM: 2003-51-0642-JPU

Estimado arquitecto Del Monte:

Hacemos referencia a su comunicación del 2 de septiembre de 2004, relacionada con este asunto.

La Oficina de Estudios Ambientales de esta Autoridad evaluó el documento mencionado en el asunto e indicó que el desarrollo bajo consulta colinda con la Carretera PR-53 al oeste, con la Carretera PR-3 al sur y con la Carretera PR-925 al este, por lo que se requiere la preparación de un Estudio de Sonido Ambiental que evalúe los posibles impactos por ruidos a los cuales podrán estar expuestos los receptores más cercanos debido al tránsito vehicular en dichas vías.

Además, se deberán cumplir los siguientes comentarios, recomendaciones y requerimientos:

1. Dada la magnitud del desarrollo objeto de consulta se deberá preparar un estudio en donde se evalúen las condiciones del tránsito presente y futuro en el sector de influencia de éste y se determine el impacto que el mismo tendrá en el sistema vial que le sirve de acceso. Se deberán incluir en los planos las mejoras a proveerse por este desarrollo en dicho sistema vial para mantener un nivel de servicio adecuado en el mismo. Se deberá dar especial consideración al acceso para servir al proyecto, de manera que cumpla con el Reglamento para el Control de Accesos a las Vías Públicas de Puerto Rico, según enmendado.

2. Para el establecimiento de cualquier sistema o dispositivo para el control del tránsito en la calle de acceso al proyecto (entiéndase portones, brazos mecánicos, sistema de comunicación con la residencia, etc.) se deberá solicitar el endoso del Departamento de Transportación y Obras Públicas, de acuerdo al Reglamento de Planificación Número 20. Dicha solicitud deberá hacerse a la Oficina de Ingeniería de Tránsito de esta Área en donde se deberá someter el diseño de estas facilidades (caseta de guardia de seguridad, barreras permanentes, barreras de control de tránsito y portón para acceso de peatón) y un Estudio de Tránsito, en donde aplique, para la evaluación y recomendación correspondiente. Para más información puede comunicarse al 787-721-8787, extensión 2838.

pdfMachine
A pdf writer that produces quality PDF files with ease!
Produce quality PDF files in seconds and preserve the integrity of your original documents. Compatible across nearly all Windows platforms, if you can print from a windows application you can use pdfMachine.
Get yours now!

3. El cargo de exacción por impacto correspondiente a este proyecto será calculado cuando se someta el estudio de tránsito y se determine el impacto al sistema vial, según establecido en el Reglamento Núm. 11-001 conocido como Normas para la Imposición de la Aportación por Concepto de Exacción por Impacto, el cual faculta a la Autoridad de Carreteras y Transportación a establecer un programa de exacción por impacto. El endoso de la Autoridad y Carreteras y Transportación, para la obtención del permiso reglamentario, estará condicionado a la formalización de un acuerdo de pago con el Asesor Legal de esta Autoridad. Para más detalles relacionados con la aportación deberá comunicarse con el Sr. Remy Parrilla Navarro al 787-721-8787, extensión 2875. No obstante, del proyecto cualificar para algún programa de vivienda de interés social, deberá someter una certificación del Departamento de la Vivienda o de la Autoridad para el Financiamiento de la Vivienda indicando el número de unidades que son de interés social.

El proponente deberá someter a la Oficina de Control de Accesos de esta Área cuatro copias de los planos corregidos, dos copias del estudio de tránsito y dos copias del estudio de sonido ambiental de acuerdo a lo antes mencionado para la evaluación correspondiente. Las mismas deberán estar firmadas y selladas por un profesional colegiado autorizado.

Esta comunicación tiene vigencia de un año, no constituye una autorización para comenzar obra alguna en el proyecto, por lo que se deberán cumplir con los requerimientos indicados en la misma, previo a obtener los permisos reglamentarios y aplica al proyecto Sea View II, de 720 unidades de vivienda, a ser construido en el predio de terreno de referencia. Cualquier otro proyecto a desarrollarse en esta propiedad deberá ser sometido a esta Autoridad para la evaluación y comentarios que apliquen.

Para cualquier aclaración o información adicional, favor de comunicarse con la Oficina de Control de Accesos de esta Área al 787-721-8787, extensión 2805, refiriéndose al número de control de esta carta. Las llamadas y visitas serán atendidas los lunes, martes, jueves y viernes de 8:00 a 11:00 de la mañana.

Cordialmente,

Samuel Forestier Castillo
Director
Área de Ingeniería de Tránsito y Operaciones

5005-JRZE-MDR-FRH-grh
Ref. C#36359

pdfMachine
A pdf writer that produces quality PDF files with ease!
Produce quality PDF files in seconds and preserve the integrity of your original documents. Compatible across nearly all Windows platforms, if you can print from a windows application you can use pdfMachine.
Get yours now!

APENDICE 2

Copia de Plano Conceptual del Proyecto

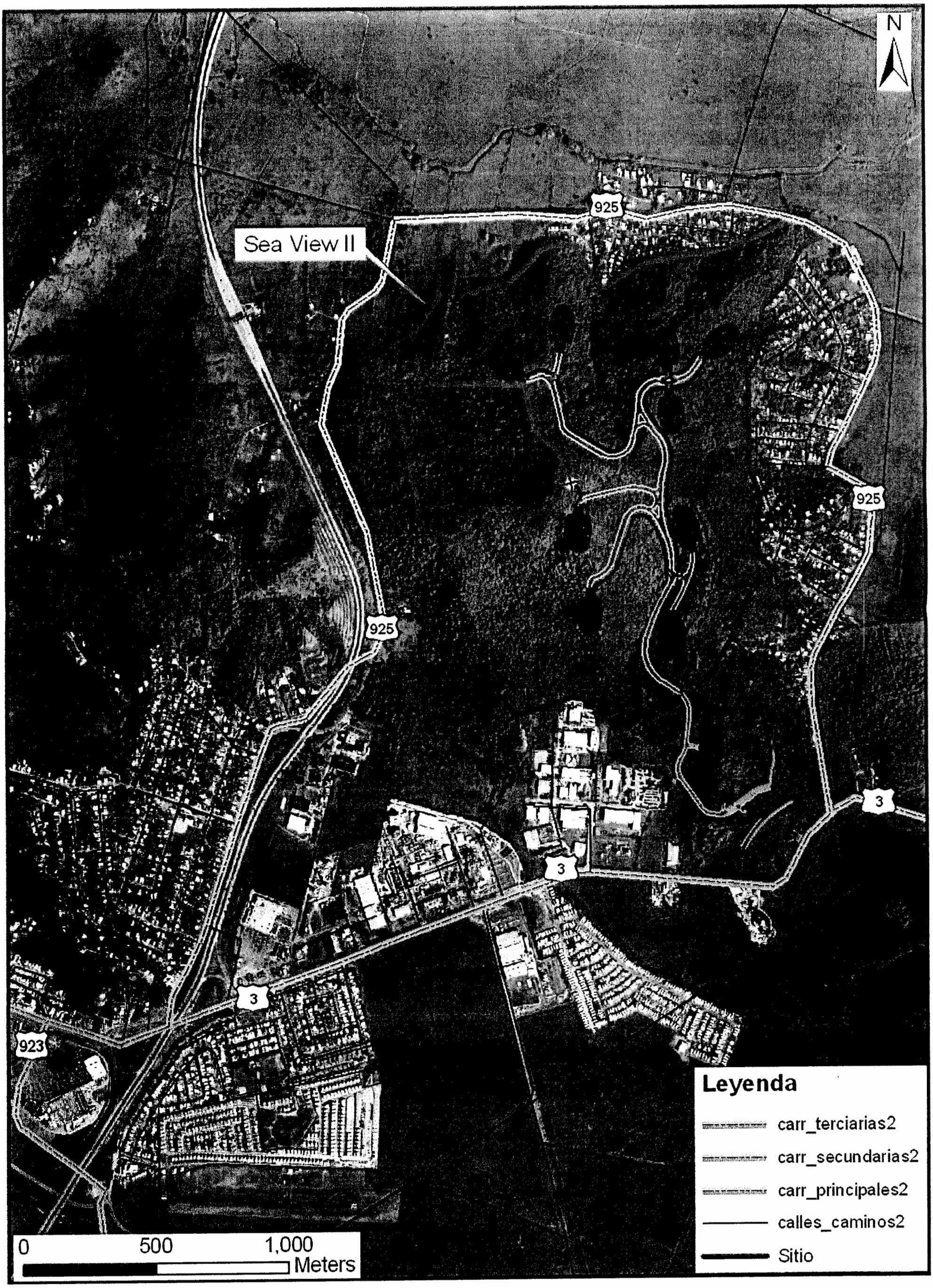
N
Sea View II
925
925
925
3
3
3
923
Leyenda
carr_terciarias2
carr_secundarias2
carr_principales2
calles_caminos2
Sitio
0
500
1,000
Meters

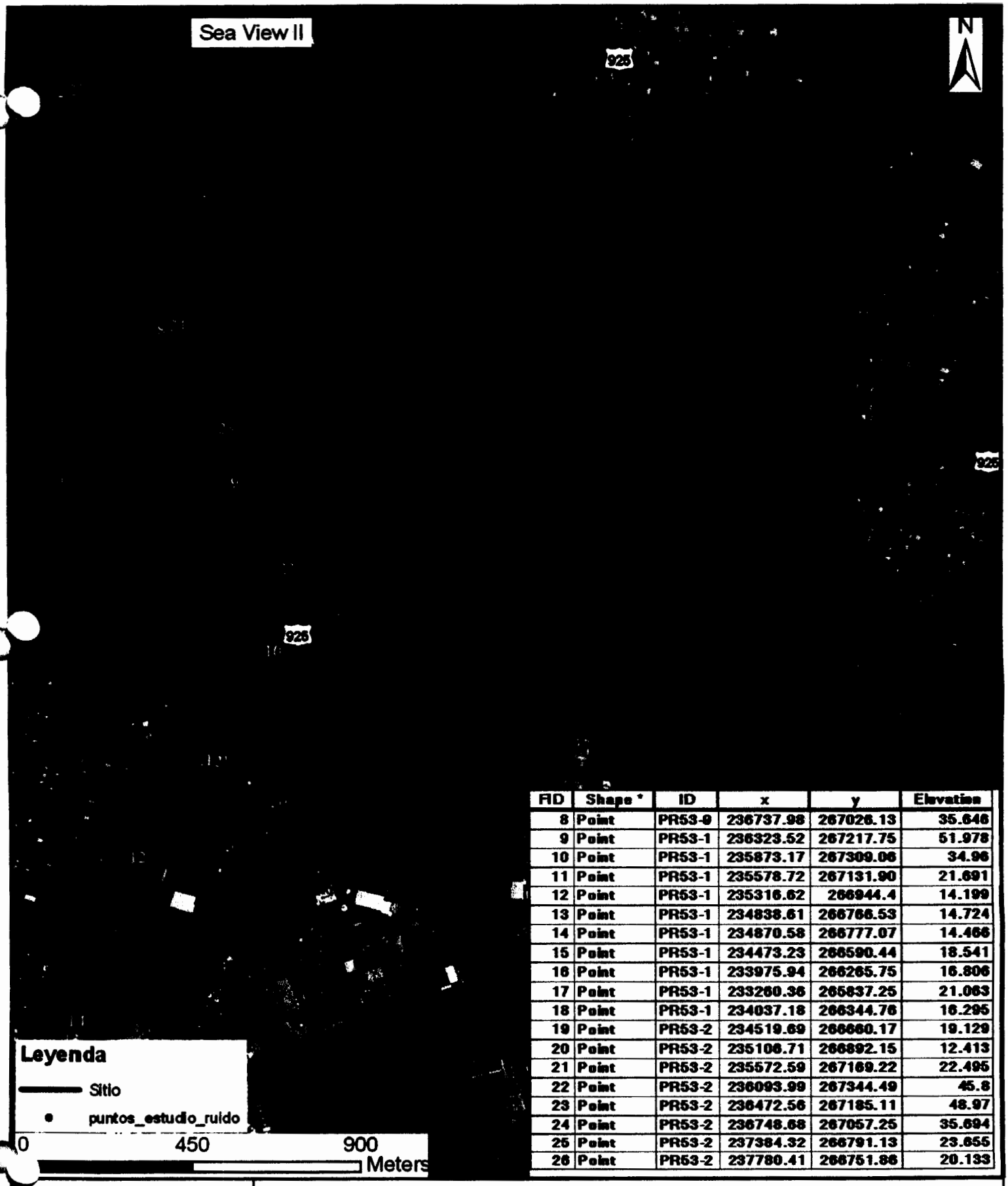

FID	Shape *	ID	x	y	Elevation
8	Point	PR53-9	236737.98	267026.13	35.646
9	Point	PR53-1	236323.52	267217.75	51.978
10	Point	PR53-1	235873.17	267309.06	34.96
11	Point	PR53-1	235578.72	267131.90	21.691
12	Point	PR53-1	235316.62	266944.4	14.199
13	Point	PR53-1	234838.61	266766.53	14.724
14	Point	PR53-1	234870.58	266777.07	14.466
15	Point	PR53-1	234473.23	266590.44	18.541
16	Point	PR53-1	233975.94	266265.75	16.806
17	Point	PR53-1	233260.36	265837.25	21.063
18	Point	PR53-1	234037.18	266344.76	16.295
19	Point	PR53-2	234519.69	266660.17	19.129
20	Point	PR53-2	235106.71	266892.15	12.413
21	Point	PR53-2	235572.59	267169.22	22.495
22	Point	PR53-2	236093.99	267344.49	45.8
23	Point	PR53-2	236472.56	267185.11	48.97
24	Point	PR53-2	236748.68	267057.25	35.694
25	Point	PR53-2	237384.32	266791.13	23.655
26	Point	PR53-2	237780.41	266751.86	20.133

GM MORRIS ENGINEERING

Puntos de estudio de Ruido

Sea View II, Humacao P.R.

APENDICE 3

Fotos del Area del Proyecto

FOTO TOMADA DESDE COLINDANCIA NORTE (EN PR-53)

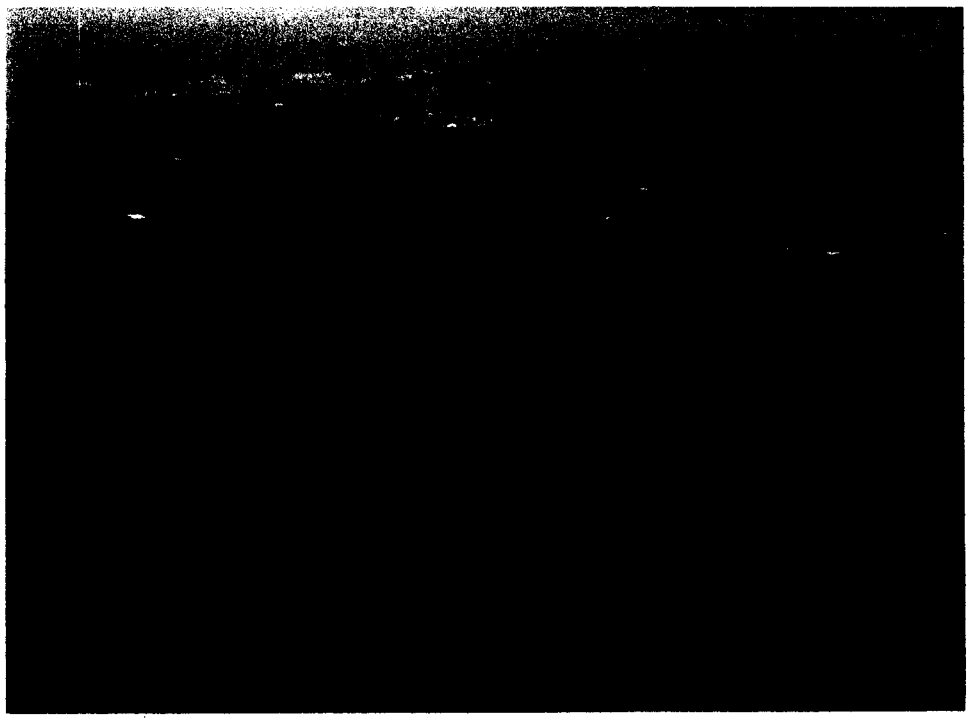

FOTO DESDE COLINDANCIA OESTE (VER PR-53 AL FONDO)

FOTO TOMADA DESDE COLINDANCIA OESTE HACIA EL INTERIOR DE PROPIEDAD

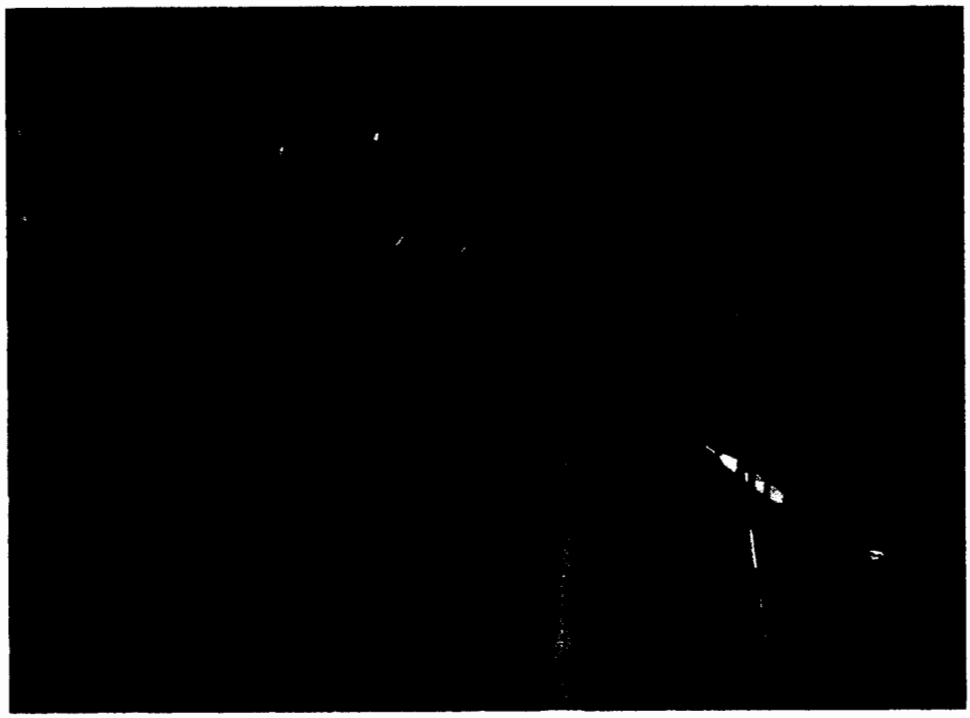

FOTO DE ESTACION DE MONITORIA DE RUIDO #1

FOTO DE ESTACION DE MONITORIA DE RUIDO #2

FOTO DE ESTACION DE MONITORIA DE RUIDO #3

FOTO TOMADA DESDE COLINDANCIA SUR

FOTO ILUSTRANDO LIMITES DE VELOCIDAD EN PR-53

APENDICE 4

Copia de certificado de calibración de sonómetro

CERTIFICATE OF CALIBRATION

Sound Level Meter

Manufacturer:	Quest Technologies	**Calibration Date:**	September 18, 2008
Model Number:	2900	**Date Due:**	September 18, 2009
Serial Number:	CDA080024	**Temperature:**	71.5 °F
Service Order:	3704	**Relative Humidity:**	48.0 %
Reference Number:	3704-2900-CDA080024	**Barometric Pressure:**	29.88

Frequency (HZ)	Meter Actual Display (dB)	Meter Weighting dB	ANSI STD	Tolerance	Relative Difference
20	64.0	-50.0	-50.5	± 3	0.5
25	69.6	-44.4	-44.7	± 3	0.3
31.5	74.9	-39.1	-39.4	± 3	0.3
40	79.8	-34.2	-34.6	± 2	0.4
50	84.1	-29.9	-30.2	± 2	0.3
63	88.1	-25.9	-26.2	± 2	0.3
80	91.9	-22.1	-22.5	± 2	0.4
100	95.1	-18.9	-19.1	± 1.5	0.2
125	98.0	-16.0	-16.1	± 1.5	0.1
160	100.9	-13.1	-13.4	± 1.5	0.3
200	103.3	-10.7	-10.9	± 1.5	0.2
250	105.4	-8.6	-8.6	± 1.5	0.0
315	107.5	-6.5	-6.6	± 1.5	0.1
400	109.3	-4.7	-4.8	± 1.5	0.1
500	110.8	-3.2	-3.2	± 1.5	0.0
630	112.1	-1.9	-1.9	± 1.5	0.0
800	113.2	-0.8	-0.8	± 1.5	0.0
1000	114.0	0.0	0.0	± 1.5	0.0
1250	114.6	0.6	0.6	± 1.5	0.0
1600	115.0	1.0	1.0	± 2	0.0
2000	115.2	1.2	1.2	± 2	0.0
2500	115.3	1.3	1.3	± 2.5	0.0
3150	115.2	1.2	1.2	± 2.5	0.0
4000	115.0	1.0	1.0	± 3	0.0
5000	114.6	0.6	0.5	± 3.5	0.1
6300	114.0	0.0	-0.1	± 4.5	0.1
8000	113.1	-0.9	-1.1	± 5	0.2
10000	111.8	-2.2	-2.5	+ 5 to -µ	0.3

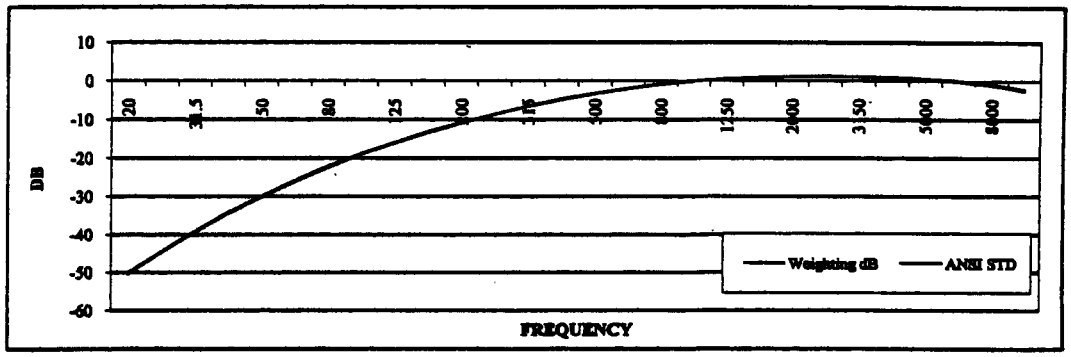

CIHE Calibration Laboratory certifies that the instrument specified above meets the manufacturer's specifications and was calibrated using standards and instruments also listed below where the accuracy is traceable to National Institute of Standards and Technology (NIST), and the calibration systems and records are in compliance to ANSI S1.4-1983

STANDARDS USED

Manufacturer	Description	Model No.	Serial No.	Certificate No.	Due Date
Rion	Pistonphone	NC-72	502474	15625-1	2/27/2009
Stanford Research	Function Generator	DS360	33001	022307	3/17/2009
Instek	Oscilloscope	GDS-820C	EG131287	934163	3/17/2009
Krohn Hite	Distortion Analyzer	6800A	350	0310094	3/17/2009

Calibrated By: _____ **Date:** 09/18/08

107-G Dunbar Avenue • Oldsmar, FL 34677 USA • PH: (813) 891-6830 • FX: (813) 854-1544
Toll Free: (888) 873-2443 • Website: www.cihequipment.com

CERTIFICATE OF CALIBRATION

Acoustical Calibrator

Manufacturer:	Quest Technologies	**Calibration Date:**	September 18, 2008
Model Number:	QC-10	**Date Due:**	September 18, 2009
Serial Number:	QIA080187	**Temperature:**	71.4 °F
Service Order:	3704	**Relative Humidity:**	48.0 %
Reference Number:	3704-QC10-QIA080187	**Barometric Pressure:**	29.89

Frequency (HZ)	Weighting dB
20	40.4
25	39.7
31.5	39.2
40	38.9
50	38.8
63	38.8
80	42.0
100	46.8
125	52.1
160	54.6
200	58.8
250	63.3
315	67.9
400	73.1
500	79.2
630	86.6
800	98.7
1000	114.0
1250	101.9
1600	87.9
2000	80.5
2500	74.2
3150	69.7
4000	65.6
5000	61.4
6300	56.7
8000	52.4
10000	47.0

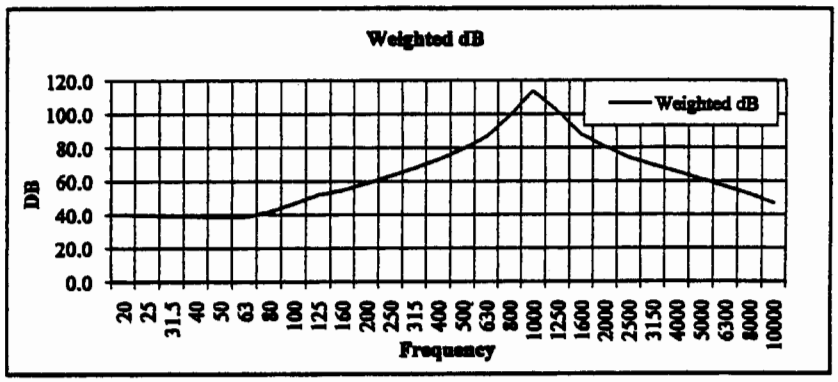

CIHE Calibration Laboratory certifies that the instrument specified above meets the manufacturer's specifications and was calibrated using standards and instruments listed below where the accuracy is traceable to National Institute of Standards and Technology (NIST), and the calibration systems and records are in compliance to ANSI S1.40-1984

STANDARDS USED

Manufacturer	Description	Model No.	Serial No.	Certificate No.	Due Date
Rion	Pistonphone	NC-72	502474	15625-1	2/27/2009
Stanford Research	Function Generator	DS360	33001	022307	3/17/2009
Instek	Oscilloscope	GDS-820C	EG131287	934163	3/17/2009
Krohn Hite	Distortion Analyzer	6800A	350	0310094	3/17/2009

Calibrated By: _____ **Date:** 09/18/08

107-G Dunbar Avenue • Oldsmar, FL 34677 USA • PH: (813) 891-6830 • FX: (813) 854-1544
Toll Free: (888) 873-2443 • Website: www.cihequipment.com

APENDICE 5

Copia de datos de tránsito obtenidos de la ACT

AUTORIDAD DE CARRETERAS Y TRANSPORTACION
PROGRAMA DE DATOS DE TRANSITO

Carretera: PR-53

Km: **Hasta:**

Municipio: Humacao

Fecha: 01/01/99 **Hasta:** 01/01/09

mm/dd/yy **mm/dd/yy**

SEARCH RESET

Nota: Use el campo de Hasta para buscar entre dos Kms ó dos Fechas.

Nota: Ejemplo de # Carretera : PR-1

Número de datos encontrados=15

# Carr.	Tipo	Km.	Clase	Descripción	Municipio	Fecha	AADT
PR-53	Expreso	29.3	Primaria	Plaza de Peaje Humacao Norte	Humacao	1-Jan-99	15,900
PR-53	Expreso	35	Primaria	Plaza de Peaje Humacao Sur	Humacao	1-Jan-99	26,200
PR-53		29.3	Primaria	Plaza Peaje Humacao Norte	Humacao	1-Jan-00	16,700
PR-53		35	Primaria	Plaza Peaje Humacao Sur	Humacao	1-Jan-00	29,500
PR-53		37.35	Primaria	Entre PR-906 Norte y PR-906 Sur	Humacao	13-Jun-00	21,700
PR-53		29.3		Plaza Peaje Humacao Norte	Humacao	31-Dec-01	17,300
PR-53		35		Plaza Peaje Humacao Sur	Humacao	31-Dec-01	29,600
PR-53		32		Entre PR-3 y PR-30	Humacao	20-Feb-02	23,900
PR-53		29.3		Plaza Peaje Humacao Norte	Humacao	31-Dec-02	18,400
PR-53		35		Plaza Peaje Humacao Sur	Humacao	31-Dec-02	32,200
PR-53		32.5	Primaria	Entre PR-3 y PR-30	Humacao	6-Nov-03	32,054

Número de datos encontrados=15

# Carr.	Tipo	Km.	Clase	Descripción	Municipio	Fecha	AADT
PR-53	Expreso	29.3	Primaria	Plaza de Peaje Humacao Norte	Humacao	1-Jan-99	15,900
PR-53	Expreso	35	Primaria	Plaza de Peaje Humacao Sur	Humacao	1-Jan-99	26,200
PR-53		29.3	Primaria	Plaza Peaje Humacao Norte	Humacao	1-Jan-00	16,700
PR-53		35	Primaria	Plaza Peaje Humacao Sur	Humacao	1-Jan-00	29,500
PR-53		37.35	Primaria	Entre PR-906 Norte y PR-906 Sur	Humacao	13-Jun-00	21,700
PR-53		29.3		Plaza Peaje Humacao Norte	Humacao	31-Dec-01	17,300
PR-53		35		Plaza Peaje Humacao Sur	Humacao	31-Dec-01	29,600
PR-53		32		Entre PR-3 y PR-30	Humacao	20-Feb-02	23,900
PR-53		29.3		Plaza Peaje Humacao Norte	Humacao	31-Dec-02	18,400
PR-53		35		Plaza Peaje Humacao Sur	Humacao	31-Dec-02	32,200
PR-53		32.5	Primaria	Entre PR-3 y PR-30	Humacao	6-Nov-03	32,054
PR-53		29.3	Primaria Urbana	Plaza Peaje Humacao Norte	Humacao	31-Dec-03	19,210
PR-53		35	Primaria	Plaza Peaje Humacao Sur	Humacao	31-Dec-03	33,568
PR-53		33	Primaria	Noreste de la PR-30	Humacao	21-Jan-04	33,600
PR-53		24	Primaria	Entre PR-927 y PR-970	Humacao	3-Mar-04	19,200

AUTORIDAD DE CARRETERAS Y TRANSPORTACION
PROGRAMA DE DATOS DE TRANSITO

Carretera: PR-925

Km: **Hasta:**

Municipio: Humacao

Fecha: 01/01/99 **Hasta:** 01/01/09

mm/dd/yy **mm/dd/yy**

SEARCH RESET

Nota: Use el campo de Hasta para buscar entre dos Kms ó dos Fechas.

Nota: Ejemplo de # Carretera : PR-1

Número de datos encontrados=3

# Carr.	Tipo	Km.	Clase	Descripción	Municipio	Fecha	AADT
PR-925		1.35	Terciaria	Norte Fabricas (Ver Mapa)	Humacao	25-Oct-00	1,600
PR-925		0		Entre PR-3(Oeste)Int.PR-53 y PR-3(Este)	Humacao	20-Jun-01	3,500
PR-925		0	Terciaria	Entre PR-3/53 y PR-3	Humacao	12-Jan-03	1,984

APENDICE 6

Copia de resultados de corrida del modelo Stamina

Resultados periodo diurno

```
*YNNNY
Sea View II sin barrera para año 2029-dia
1  3
2  4
PR-53 carril sur a norte (hacia Fajardo)
'CARS'  1812  96
'MT'      58  96
'HT'      58  96
'L'/
'S-1'  380    0  14.1  1
'S-2'  580  250  22.5  1
'S-3'  656  500  34.9  1
'S-4'  620  750  45.8  1
'S-5'  500 1000  51.9  1
'S-6'  375 1250  48.9  0
'S-7'  275 1500  35.7  0
'S-8'  156 1750  23.7  0
'S-9'   82 2000  20.1  0
'L'/
PR-53 carril norte a sur (hacia PR-3)
'CARS'  1209  96
'MT'      39  96
'HT'      39  96
'L'/
'N-1'  360    0   14.1  0
'N-2'  560  250   22.5  0
'N-3'  636  500   34.9  0
'N-4'  600  750   45.8  0
'N-5'  480 1000   51.9  0
'N-6'  355 1250   48.9  1
'N-7'  255 1500   35.7  1
'N-8'  136 1750   23.7  1
'N-9'   62 2000   20.1  1
'L'/
PR-925(carril sur a norte)
'CARS'  122    56
'MT'      3    56
'HT'      3    56
'L'/
'S-1'   500  155  14.1  1
'S-2'   562  250  21.0  1
'S-3'   755  505  34.0  1
'S-4'   700  750  48.0  1
'S-5'   620 1000  50.0  1
'S-6'   530 1250  30.0  0
'S-7'   594 1500  23.0  0
'S-8'   740 1750  18.0  0
'L'/
PR-925 (carril norte a sur)
'CARS'   81   56
'MT'      2   56
'HT'      2   56
'L'/
'N-1'   497   155  14.1  0
'N-2'   559   250  21.0  0
'N-3'   752   505  34.0  0
'N-4'   697   750  48.0  0
'N-5'   617  1000  50.0  0
'N-6'   597  1250  30.0  1
'N-7'   591  1500  23.0  1
'N-8'   737  1750  18.0  1
'L'/
5 4
```

```
RECEIVERS AT SEA VIEW II
'SV-1'  1375 1625  91.5
'SV-2'  1125 1480 111.5
'SV-3'  1440  750 161.5
'SV-4'  1480  500  91.5
6 1
ALPHA VALUES
0.5 0.5 0.5 0.5
0.5 0.5 0.5 0.5
0.5 0.5 0.5 0.5
0.5 0.5 0.5 0.5
6 2
SHIELDING FACTORS
2 2 2 2
2 2 2 2
2 2 2 2
2 2 2 2
7/
```

STAMINA 2.0/BCR
FHWA VERSION 3 (MARCH 1983)
TRAFFIC NOISE PREDICTION MODEL

(INPUT UNITS- METRIC , OUTPUT UNITS- ENGLISH)

Sea View II sin barrera para año 2029-dia

PROGRAM INITIALIZATION PARAMETERS

HEIGHT	CODE	DESCRIPTION
0.00	1	RECEIVER HEIGHT ADJUSTMENT
1.00	2	A-WEIGHTED SOUND LEVEL ONLY
0.00	3	HEIGHT ADJUSTMENT FOR PASSENGER CARS (CARS)
8.00	4	HEIGHT ADJUSTMENT FOR HEAVY TRUCKS (HT)
2.30	5	HEIGHT ADJUSTMENT FOR MEDIUM TRUCKS (MT)

ROADWAY 1 PR-53 carril sur a norte (hacia Fajardo)

VEHICLE TYPE	VEHICLES/HOUR	SPEED
CARS	1812.	60.
HT	58.	60.
MT	58.	60.

	COORDINATES X	Y	Z	GRADE
S-1	1247.	0.	46.	1
S-2	1903.	820.	74.	1
S-3	2152.	1640.	115.	1
S-4	2034.	2461.	150.	1
S-5	1640.	3281.	170.	1
S-6	1230.	4101.	160.	
S-7	902.	4921.	117.	
S-8	512.	5741.	78.	
S-9	269.	6562.	66.	

ROADWAY 2 PR-53 carril norte a sur (hacia PR-3)

VEHICLE TYPE	VEHICLES/HOUR	SPEED
CARS	1209.	60.
HT	39.	60.
MT	39.	60.

	COORDINATES X	Y	Z	GRADE
N-1	1181.	0.	46.	
N-2	1837.	820.	74.	
N-3	2087.	1640.	115.	
N-4	1969.	2461.	150.	
N-5	1575.	3281.	170.	
N-6	1165.	4101.	160.	1
N-7	837.	4921.	117.	1
N-8	446.	5741.	78.	1

		SVD.STA		
N-9	203.	6562.	66.	1

ROADWAY 3 PR-925(carril sur a norte)

VEHICLE TYPE	VEHICLES/HOUR	SPEED
CARS	122.	35.
HT	3.	35.
MT	3.	35.

	COORDINATES			
	X	Y	Z	GRADE
S-1	1640.	509.	46.	1
S-2	1844.	820.	69.	1
S-3	2477.	1657.	112.	1
S-4	2297.	2461.	157.	1
S-5	2034.	3281.	164.	1
S-6	1739.	4101.	98.	
S-7	1949.	4921.	75.	
S-8	2428.	5741.	59.	

ROADWAY 4 PR-925 (carril norte a sur)

VEHICLE TYPE	VEHICLES/HOUR	SPEED
CARS	81.	35.
HT	2.	35.
MT	2.	35.

	COORDINATES			
	X	Y	Z	GRADE
N-1	1631.	509.	46.	
N-2	1834.	820.	69.	
N-3	2467.	1657.	112.	
N-4	2287.	2461.	157.	
N-5	2024.	3281.	164.	
N-6	1959.	4101.	98.	1
N-7	1939.	4921.	75.	1
N-8	2418.	5741.	59.	1

RECEIVERS AT SEA VIEW II

	COORDINATES		
	X	Y	Z
SV-1	4511.	5331.	300.
SV-2	3691.	4856.	366.
SV-3	4724.	2461.	530.
SV-4	4856.	1640.	300.

ALPHA FACTORS - RECEIVER ACROSS,ROADWAY DOWN

```
1 * 0.5 0.5 0.5 0.5
2 * 0.5 0.5 0.5 0.5
3 * 0.5 0.5 0.5 0.5
4 * 0.5 0.5 0.5 0.5
```

SHIELDING FACTORS - RECEIVER ACROSS,ROADWAY DOWN

```
1 * 2.0 2.0 2.0 2.0
2 * 2.0 2.0 2.0 2.0
3 * 2.0 2.0 2.0 2.0
4 * 2.0 2.0 2.0 2.0
```

RECEIVER	LEQ(H)	L10
SV-1	43.6	46.2

NO ROADWAY SEGMENTS EXCEED 40.0 DBA

RECEIVER	LEQ(H)	L10
SV-2	46.9	49.5

NO ROADWAY SEGMENTS EXCEED 40.0 DBA

RECEIVER	LEQ(H)	L10
SV-3	45.5	48.3

NO ROADWAY SEGMENTS EXCEED 40.0 DBA

RECEIVER	LEQ(H)	L10
SV-4	45.1	47.9

NO ROADWAY SEGMENTS EXCEED 40.0 DBA

Resultados periodo nocturno

```
*YNNNY
Sea View II sin barrera para año 2029-noche
1  3
2  4
PR-53 carril sur a norte (hacia Fajardo)
'CARS'   272  96
'MT'       9  96
'HT'       9  96
'L'/
'S-1'  380    0  14.1  1
'S-2'  580  250  22.5  1
'S-3'  656  500  34.9  1
'S-4'  620  750  45.8  1
'S-5'  500 1000  51.9  1
'S-6'  375 1250  48.9  0
'S-7'  275 1500  35.7  0
'S-8'  156 1750  23.7  0
'S-9'   82 2000  20.1  0
'L'/
PR-53 carril norte a sur (hacia PR-3)
'CARS'   181  96
'MT'       6  96
'HT'       6  96
'L'/
'N-1'  360    0   14.1  0
'N-2'  560  250   22.5  0
'N-3'  636  500   34.9  0
'N-4'  600  750   45.8  0
'N-5'  480 1000   51.9  0
'N-6'  355 1250   48.9  1
'N-7'  255 1500   35.7  1
'N-8'  136 1750   23.7  1
'N-9'   62 2000   20.1  1
'L'/
PR-925(carril sur a norte)
'CARS'   18    56
'MT'      1    56
'HT'      1    56
'L'/
'S-1'   500  155  14.1  1
'S-2'   562  250  21.0  1
'S-3'   755  505  34.0  1
'S-4'   700  750  48.0  1
'S-5'   620 1000  50.0  1
'S-6'   530 1250  30.0  0
'S-7'   594 1500  23.0  0
'S-8'   740 1750  18.0  0
'L'/
PR-925 (carril norte a sur)
'CARS'   12   56
'MT'      1   56
'HT'      1   56
'L'/
'N-1'   497   155  14.1  0
'N-2'   559   250  21.0  0
'N-3'   752   505  34.0  0
'N-4'   697   750  48.0  0
'N-5'   617  1000  50.0  0
'N-6'   597  1250  30.0  1
'N-7'   591  1500  23.0  1
'N-8'   737  1750  18.0  1
'L'/
5 4
```

```
RECEIVERS AT SEA VIEW II
'SV-1'  1375 1625  91.5
'SV-2'  1125 1480 111.5
'SV-3'  1440  750 161.5
'SV-4'  1480  500  91.5
6 1
ALPHA VALUES
0.5 0.5 0.5 0.5
0.5 0.5 0.5 0.5
0.5 0.5 0.5 0.5
0.5 0.5 0.5 0.5
6 2
SHIELDING FACTORS
2 2 2 2
2 2 2 2
2 2 2 2
2 2 2 2
7/
```

STAMINA 2.0/BCR
FHWA VERSION 3 (MARCH 1983)
TRAFFIC NOISE PREDICTION MODEL

(INPUT UNITS- METRIC , OUTPUT UNITS- ENGLISH)

Sea View II sin barrera para año 2029-noche

PROGRAM INITIALIZATION PARAMETERS

HEIGHT	CODE	DESCRIPTION
0.00	1	RECEIVER HEIGHT ADJUSTMENT
1.00	2	A-WEIGHTED SOUND LEVEL ONLY
0.00	3	HEIGHT ADJUSTMENT FOR PASSENGER CARS (CARS)
8.00	4	HEIGHT ADJUSTMENT FOR HEAVY TRUCKS (HT)
2.30	5	HEIGHT ADJUSTMENT FOR MEDIUM TRUCKS (MT)

ROADWAY 1 PR-53 carril sur a norte (hacia Fajardo)

VEHICLE TYPE	VEHICLES/HOUR	SPEED
CARS	272.	60.
HT	9.	60.
MT	9.	60.

	COORDINATES X	Y	Z	GRADE
S-1	1247.	0.	46.	1
S-2	1903.	820.	74.	1
S-3	2152.	1640.	115.	1
S-4	2034.	2461.	150.	1
S-5	1640.	3281.	170.	1
S-6	1230.	4101.	160.	
S-7	902.	4921.	117.	
S-8	512.	5741.	78.	
S-9	269.	6562.	66.	

ROADWAY 2 PR-53 carril norte a sur (hacia PR-3)

VEHICLE TYPE	VEHICLES/HOUR	SPEED
CARS	181.	60.
HT	6.	60.
MT	6.	60.

	COORDINATES X	Y	Z	GRADE
N-1	1181.	0.	46.	
N-2	1837.	820.	74.	
N-3	2087.	1640.	115.	
N-4	1969.	2461.	150.	
N-5	1575.	3281.	170.	
N-6	1165.	4101.	160.	1
N-7	837.	4921.	117.	1
N-8	446.	5741.	78.	1

		SVN.STA		
N-9	203.	6562.	66.	1

ROADWAY 3 PR-925(carril sur a norte)

VEHICLE TYPE	VEHICLES/HOUR	SPEED
CARS	18.	35.
HT	1.	35.
MT	1.	35.

	COORDINATES			
	X	Y	Z	GRADE
S-1	1640.	509.	46.	1
S-2	1844.	820.	69.	1
S-3	2477.	1657.	112.	1
S-4	2297.	2461.	157.	1
S-5	2034.	3281.	164.	1
S-6	1739.	4101.	98.	
S-7	1949.	4921.	75.	
S-8	2428.	5741.	59.	

ROADWAY 4 PR-925 (carril norte a sur)

VEHICLE TYPE	VEHICLES/HOUR	SPEED
CARS	12.	35.
HT	1.	35.
MT	1.	35.

	COORDINATES			
	X	Y	Z	GRADE
N-1	1631.	509.	46.	
N-2	1834.	820.	69.	
N-3	2467.	1657.	112.	
N-4	2287.	2461.	157.	
N-5	2024.	3281.	164.	
N-6	1959.	4101.	98.	1
N-7	1939.	4921.	75.	1
N-8	2418.	5741.	59.	1

RECEIVERS AT SEA VIEW II

	COORDINATES		
	X	Y	Z
SV-1	4511.	5331.	300.
SV-2	3691.	4856.	366.
SV-3	4724.	2461.	530.
SV-4	4856.	1640.	300.

ALPHA FACTORS - RECEIVER ACROSS,ROADWAY DOWN

```
1 * 0.5 0.5 0.5 0.5
2 * 0.5 0.5 0.5 0.5
3 * 0.5 0.5 0.5 0.5
4 * 0.5 0.5 0.5 0.5
```

SHIELDING FACTORS - RECEIVER ACROSS,ROADWAY DOWN

```
1 * 2.0 2.0 2.0 2.0
2 * 2.0 2.0 2.0 2.0
3 * 2.0 2.0 2.0 2.0
4 * 2.0 2.0 2.0 2.0
```

RECEIVER	LEQ(H)	L10
SV-1	35.6	39.1

NO ROADWAY SEGMENTS EXCEED 40.0 DBA

RECEIVER	LEQ(H)	L10
SV-2	38.9	42.4

NO ROADWAY SEGMENTS EXCEED 40.0 DBA

RECEIVER	LEQ(H)	L10
SV-3	37.5	41.0

NO ROADWAY SEGMENTS EXCEED 40.0 DBA

RECEIVER	LEQ(H)	L10
SV-4	37.0	40.6

NO ROADWAY SEGMENTS EXCEED 40.0 DBA

Apéndice J

Endoso del Instituto de Cultura Puertorriqueña

INSTITUTO DE CULTURA PUERTORRIQUEÑA

Apartado 4184
SAN JUAN DE PUERTO RICO 00902-4184

17 de octubre de 1996

Sr. Morris Demel
CONSTRUCTION TEAM, S.E.
155 Luna
San Juan PR 00901

Estimado señor Demel:

EVAL. ARQLCA. FASES IA-IB
SEAVIEW GARDEN, HUMACAO, PR

El Programa de Arqueología del Instituto de Cultura Puertorriqueña ha recibido el estudio arqueológico realizado por el Arql. Jesús Vega al proyecto de referencia. El mismo cumple adecuadamente con los requerimientos vigentes para este nivel de investigación de recursos culturales. A tales efectos, estamos emitiendo un endoso al proyecto en su aspecto arqueológico.

Le recordamos, sin embargo, que de acuerdo a lo establecido por la Ley 112 del 20 de julio de 1988 de encontrar algún vestigio cultural al momento del movimiento de terreno se deberá detener el proyecto y notificar al Instituto de Cultura Puertorriqueña.

Aprovechamos la oportunidad para reconocer su interés y colaboración en el estudio y la protección del patrimonio arqueológico del pueblo puertorriqueño.

Cordialmente,

Hernán Ortiz Montañez
Director Interino
Programa de Arqueología

rmd

cf: Arql. Jesús Vega
Sr. Luis Frías Taboas #CONS. JP. 96-51-0364-JPU-ISV