Intersection Capacity Utilization 6: PR-54 & Ave. Centro de Convenciones

C:\PR-54\PR-54 con proyecto año 2014(1.11)_AM.sy7 12/21/2008

Movement	EBL	EBT	EBR	WBL	WBT	WBR	NBL	NBT	NBR	SBL	SBT	SBR
Lane Configurations												
Volume (vph)	233	1104	47	220	1138	307	67	218	632	170	152	250
Pedestrians												
Ped Button												
Pedestrian Timing (s)												
Free Right			No			No			No			No
Ideal Flow	1900	1900	1900	1900	1900	1900	1900	1900	1900	1900	1900	1900
Lost Time (s)	4.0	4.0	4.0	4.0	4.0	4.0	4.0	4.0	4.0	4.0	4.0	4.0
Minimum Green (s)	4.0	4.0	4.0	4.0	4.0	4.0	4.0	4.0	4.0	4.0	4.0	4.0
Refr Cycle Length (s)	120											
Volume Combined (vph)	233	1104	47	220	1138	307	0	916	0	0	572	0
Lane Utilization Factor	1.00	0.95	1.00	1.00	0.95	1.00	1.00	0.95	1.00	1.00	0.95	1.00
Turning Factor (vph)	0.95	1.00	0.85	0.95	1.00	0.85	0.95	0.89	0.85	0.95	0.92	0.85
Saturated Flow (vph)	1805	3618	1615	1805	3618	1615	0	3232	0	0	3330	0
Ped Intf Time (s)	0.0	0.0	0.0	0.0	0.0	0.0	0.0	0.0	0.0	0.0	0.0	0.0
Pedestrian Frequency (%)		0.00			0.00			0.00			0.00	
Protected Option Allowed		Yes			Yes			No			No	
Reference Time (s)	15.5	36.6	3.5	14.6	37.7	22.8			0.0			0.0
Adj Reference Time (s)	19.5	40.6	8.0	18.6	41.7	26.8			0.0			0.0
Permitted Option												
Adj Saturation A (vph)	120	1809		120	1809		0	392		0	111	
Reference Time A (s)	232.5	36.6		219.2	37.7		0.0	99.4		0.0	183.6	
Adj Saturation B (vph	NA	NA		NA	NA		NA	NA		NA	NA	
Reference Time B (s)	NA	NA		NA	NA		NA	NA		NA	NA	
Reference Time (s)		232.5			219.2			99.4			183.6	
Adj Reference Time (s)		236.5			223.2			103.4			187.6	
Split Option												
Ref Time Combined (s)	15.5	36.6		14.6	37.7		0.0	34.0		0.0	20.6	
Ref Time Seperate (s)	15.5	36.6		14.6	37.7		4.4	8.1		11.3	5.6	
Reference Time (s)	36.6	36.6		37.7	37.7		34.0	34.0		20.6	20.6	
Adj Reference Time (s)	40.6	40.6		41.7	41.7		38.0	38.0		24.6	24.6	

Summary	EB WB	NB SB	Combined
Protected Option (s)	61.2	NA	
Permitted Option (s)	236.5	187.6	
Split Option (s)	82.4	62.6	
Minimum (s)	61.2	62.6	123.8

Right Turns	EBR	WBR
Adj Reference Time (s)	8.0	26.8
Cross Thru Ref Time (s)	24.6	38.0
Oncoming Left Ref Time (s)	18.6	19.5
Combined (s)	51.2	84.3

Intersection Summary

Intersection Capacity Utilization 103.2% ICU Level of Service G

Reference Times and Phasing Options do not represent an optimized timing plan.

HCM Signalized Intersection Capacity Analysis
C:\PR-54\PR-54 con proyecto año 2014(1.11)_AM.sy7

12: PR-54 & Ave. Marcelino Blondet
12/21/2008

Movement	EBL	EBT	EBR	WBL	WBT	WBR	NBL	NBT	NBR	SBL	SBT	SBR
Lane Configurations												
Ideal Flow (vphpl)	1900	1900	1900	1900	1900	1900	1900	1900	1900	1900	1900	1900
Total Lost time (s)	4.0	4.0		4.0	4.0	4.0	4.0	4.0			4.0	
Lane Util. Factor	1.00	0.91		1.00	0.95	1.00	0.91	0.91			0.95	
Frt	1.00	0.95		1.00	1.00	0.85	1.00	0.95			0.96	
Flt Protected	0.95	1.00		0.95	1.00	1.00	0.95	1.00			0.99	
Satd. Flow (prot)	1789	4893		1789	3579	1601	1628	3229			3389	
Flt Permitted	0.95	1.00		0.95	1.00	1.00	0.95	1.00			0.99	
Satd. Flow (perm)	1789	4893		1789	3579	1601	1628	3229			3389	
Volume (vph)	186	1194	570	368	1066	46	348	355	229	135	316	181
Peak-hour factor, PHF	0.96	0.96	0.96	0.96	0.96	0.96	0.96	0.96	0.96	0.96	0.96	0.96
Growth Factor (vph)	111%	111%	111%	111%	111%	111%	111%	111%	111%	111%	111%	111%
Adj. Flow (vph)	215	1381	659	426	1233	53	402	410	265	156	365	209
RTOR Reduction (vph)	0	66	0	0	0	19	0	53	0	0	33	0
Lane Group Flow (vph)	215	1974	0	426	1233	34	344	680	0	0	697	0
Turn Type	Prot			Prot		Perm	Split			Split		
Protected Phases	5	2		1	6		8	8		4	4	
Permitted Phases						6						
Actuated Green, G (s)	19.1	44.0		22.0	46.9	46.9	29.0	29.0			19.0	
Effective Green, g (s)	19.1	44.0		22.0	46.9	46.9	29.0	29.0			19.0	
Actuated g/C Ratio	0.15	0.34		0.17	0.36	0.36	0.22	0.22			0.15	
Clearance Time (s)	4.0	4.0		4.0	4.0	4.0	4.0	4.0			4.0	
Vehicle Extension (s)	3.0	3.0		3.0	3.0	3.0	3.0	3.0			3.0	
Lane Grp Cap (vph)	263	1656		303	1291	578	363	720			495	
v/s Ratio Prot	0.12	c0.40		c0.24	0.34		c0.21	0.21			c0.21	
v/s Ratio Perm						0.02						
v/c Ratio	0.82	1.19		1.41	0.96	0.06	0.95	0.94			1.41	
Uniform Delay, d1	53.8	43.0		54.0	40.5	27.1	49.8	49.7			55.5	
Progression Factor	1.00	1.00		1.00	1.00	1.00	1.00	1.00			1.00	
Incremental Delay, d2	17.6	92.7		201.3	16.4	0.2	33.5	21.0			195.2	
Delay (s)	71.3	135.7		255.3	56.9	27.3	83.3	70.7			250.7	
Level of Service	E	F		F	E	C	F	E			F	
Approach Delay (s)		129.5			105.4			74.7			250.7	
Approach LOS		F			F			E			F	

Intersection Summary

HCM Average Control Delay	127.4	HCM Level of Service	F
HCM Volume to Capacity ratio	1.21		
Actuated Cycle Length (s)	130.0	Sum of lost time (s)	16.0
Intersection Capacity Utilization	116.4%	ICU Level of Service	H
Analysis Period (min)	15		

c Critical Lane Group

Intersection Capacity Utilization
C:\PR-54\PR-54 con proyecto año 2014(1.11)_AM.sy7

12: PR-54 & Ave. Marcelino Blondet
12/21/2008

Movement	EBL	EBT	EBR	WBL	WBT	WBR	NBL	NBT	NBR	SBL	SBT	SBR
Lane Configurations												
Volume (vph)	206	1325	633	408	1183	51	386	394	254	150	351	201
Pedestrians												
Ped Button												
Pedestrian Timing (s)												
Free Right			No			No			No			No
Ideal Flow	1900	1900	1900	1900	1900	1900	1900	1900	1900	1900	1900	1900
Lost Time (s)	4.0	4.0	4.0	4.0	4.0	4.0	4.0	4.0	4.0	4.0	4.0	4.0
Minimum Green (s)	4.0	4.0	4.0	4.0	4.0	4.0	4.0	4.0	4.0	4.0	4.0	4.0
Refr Cycle Length (s)	120											
Volume Combined (vph)	206	1958	0	408	1183	51	0	1035	0	0	702	0
Lane Utilization Factor	1.00	0.91	1.00	1.00	0.95	1.00	1.00	0.95	1.00	1.00	0.95	1.00
Turning Factor (vph)	0.95	0.95	0.85	0.95	1.00	0.85	0.95	0.95	0.85	0.95	0.95	0.85
Saturated Flow (vph)	1805	4925	0	1805	3618	1615	0	5129	0	0	3425	0
Ped Intf Time (s)	0.0	0.0	0.0	0.0	0.0	0.0	0.0	0.0	0.0	0.0	0.0	0.0
Pedestrian Frequency (%)		0.00			0.00			0.00			0.00	
Protected Option Allowed		Yes			Yes			No			No	
Reference Time (s)	13.7	47.7	0.0	27.2	39.3	3.8			0.0			0.0
Adj Reference Time (s)	17.7	51.7	0.0	31.2	43.3	8.0			0.0			0.0
Permitted Option												
Adj Saturation A (vph)	120	1642		120	1809		0	171		0	114	
Reference Time A (s)	205.9	47.7		407.3	39.3		0.0	271.1		0.0	157.5	
Adj Saturation B (vph	NA	NA		NA	NA		NA	NA		NA	NA	
Reference Time B (s)	NA	NA		NA	NA		NA	NA		NA	NA	
Reference Time (s)		205.9			407.3			271.1			157.5	
Adj Reference Time (s)		209.9			411.3			275.1			161.5	
Split Option												
Ref Time Combined (s)	13.7	47.7		27.2	39.3		0.0	24.2		0.0	24.6	
Ref Time Seperate (s)	13.7	32.3		27.2	39.3		12.8	13.9		10.0	12.3	
Reference Time (s)	47.7	47.7		39.3	39.3		24.2	24.2		24.6	24.6	
Adj Reference Time (s)	51.7	51.7		43.3	43.3		28.2	28.2		28.6	28.6	

Summary	EB WB	NB SB	Combined
Protected Option (s)	82.9	NA	
Permitted Option (s)	411.3	275.1	
Split Option (s)	95.0	56.8	
Minimum (s)	82.9	56.8	139.6

Right Turns	WBR
Adj Reference Time (s)	8.0
Cross Thru Ref Time (s)	28.2
Oncoming Left Ref Time (s)	17.7
Combined (s)	53.9

Intersection Summary

Intersection Capacity Utilization 116.4% ICU Level of Service H

Reference Times and Phasing Options do not represent an optimized timing plan.

HCM Signalized Intersection Capacity Analysis
C:\PR-54\PR-54 con proyecto año 2014(1.11)_AM.sy7

7: PR-54 & PR-744
12/21/2008

Movement	EBL	EBT	EBR	WBL	WBT	WBR	NBL	NBT	NBR	SBL	SBT	SBR
Lane Configurations												
Ideal Flow (vphpl)	1900	1900	1900	1900	1900	1900	1900	1900	1900	1900	1900	1900
Total Lost time (s)	4.0	4.0		4.0	4.0	4.0		4.0			4.0	
Lane Util. Factor	1.00	0.91		1.00	0.95	1.00		1.00			1.00	
Frt	1.00	0.97		1.00	1.00	0.85		0.98			0.98	
Flt Protected	0.95	1.00		0.95	1.00	1.00		0.98			0.99	
Satd. Flow (prot)	1789	4971		1789	3579	1601		1808			1826	
Flt Permitted	0.95	1.00		0.95	1.00	1.00		0.98			0.99	
Satd. Flow (perm)	1789	4971		1789	3579	1601		1808			1826	
Volume (vph)	216	861	245	195	1416	283	140	107	34	74	152	32
Peak-hour factor, PHF	0.96	0.96	0.96	0.96	0.96	0.96	0.96	0.96	0.96	0.96	0.96	0.96
Growth Factor (vph)	111%	111%	111%	111%	111%	111%	111%	111%	111%	111%	111%	111%
Adj. Flow (vph)	250	996	283	225	1637	327	162	124	39	86	176	37
RTOR Reduction (vph)	0	38	0	0	0	112	0	4	0	0	4	0
Lane Group Flow (vph)	250	1241	0	225	1637	215	0	321	0	0	295	0
Turn Type	Prot			Prot		Perm	Split			Split		
Protected Phases	5	2		1	6		8	8		4	4	
Permitted Phases						6						
Actuated Green, G (s)	16.0	38.1		20.1	42.2	42.2		26.1			21.1	
Effective Green, g (s)	16.0	38.1		20.1	42.2	42.2		26.1			21.1	
Actuated g/C Ratio	0.13	0.31		0.17	0.35	0.35		0.21			0.17	
Clearance Time (s)	4.0	4.0		4.0	4.0	4.0		4.0			4.0	
Vehicle Extension (s)	3.0	3.0		3.0	3.0	3.0		3.0			3.0	
Lane Grp Cap (vph)	236	1560		296	1244	557		389			317	
v/s Ratio Prot	c0.14	0.25		0.13	c0.46			c0.18			c0.16	
v/s Ratio Perm						0.13						
v/c Ratio	1.06	0.80		0.76	1.32	0.39		0.83			0.93	
Uniform Delay, d1	52.7	38.1		48.3	39.6	29.8		45.5			49.4	
Progression Factor	1.00	1.00		1.00	1.00	1.00		1.00			1.00	
Incremental Delay, d2	75.1	4.3		10.9	148.0	2.0		13.3			32.8	
Delay (s)	127.8	42.4		59.3	187.6	31.9		58.8			82.3	
Level of Service	F	D		E	F	C		E			F	
Approach Delay (s)		56.3			151.1			58.8			82.3	
Approach LOS		E			F			E			F	

Intersection Summary

HCM Average Control Delay	106.1	HCM Level of Service	F
HCM Volume to Capacity ratio	1.08		
Actuated Cycle Length (s)	121.4	Sum of lost time (s)	16.0
Intersection Capacity Utilization	96.2%	ICU Level of Service	F
Analysis Period (min)	15		

c Critical Lane Group

Intersection Capacity Utilization
C:\PR-54\PR-54 con proyecto año 2014(1.11)_AM.sy7

7: PR-54 & PR-744
12/21/2008

Movement	EBL	EBT	EBR	WBL	WBT	WBR	NBL	NBT	NBR	SBL	SBT	SBR
Lane Configurations												
Volume (vph)	240	956	272	216	1572	314	155	119	38	82	169	36
Pedestrians												
Ped Button												
Pedestrian Timing (s)												
Free Right			No			No			No			No
Ideal Flow	1900	1900	1900	1900	1900	1900	1900	1900	1900	1900	1900	1900
Lost Time (s)	4.0	4.0	4.0	4.0	4.0	4.0	4.0	4.0	4.0	4.0	4.0	4.0
Minimum Green (s)	4.0	4.0	4.0	4.0	4.0	4.0	4.0	4.0	4.0	4.0	4.0	4.0
Refr Cycle Length (s)	120											
Volume Combined (vph)	240	1228	0	216	1572	314	0	312	0	0	286	0
Lane Utilization Factor	1.00	0.91	1.00	1.00	0.95	1.00	1.00	1.00	1.00	1.00	1.00	1.00
Turning Factor (vph)	0.95	0.97	0.85	0.95	1.00	0.85	0.95	0.96	0.85	0.95	0.97	0.85
Saturated Flow (vph)	1805	5004	0	1805	3618	1615	0	1819	0	0	1838	0
Ped Intf Time (s)	0.0	0.0	0.0	0.0	0.0	0.0	0.0	0.0	0.0	0.0	0.0	0.0
Pedestrian Frequency (%)		0.00			0.00			0.00			0.00	
Protected Option Allowed		Yes			Yes			No			No	
Reference Time (s)	15.9	29.4	0.0	14.4	52.1	23.3			0.0			0.0
Adj Reference Time (s)	19.9	33.4	0.0	18.4	56.1	27.3			0.0			0.0
Permitted Option												
Adj Saturation A (vph)	120	1668		120	1809		0	1057		0	1691	
Reference Time A (s)	239.1	29.4		215.9	52.1		0.0	35.4		0.0	20.3	
Adj Saturation B (vph	NA	NA		NA	NA		NA	NA		NA	NA	
Reference Time B (s)	NA	NA		NA	NA		NA	NA		NA	NA	
Reference Time (s)		239.1			215.9			35.4			20.3	
Adj Reference Time (s)		243.1			219.9			39.4			24.3	
Split Option												
Ref Time Combined (s)	15.9	29.4		14.4	52.1		0.0	20.6		0.0	18.7	
Ref Time Seperate (s)	15.9	22.9		14.4	52.1		10.3	7.8		5.5	10.9	
Reference Time (s)	29.4	29.4		52.1	52.1		20.6	20.6		18.7	18.7	
Adj Reference Time (s)	33.4	33.4		56.1	56.1		24.6	24.6		22.7	22.7	

Summary	EB WB	NB SB	Combined
Protected Option (s)	76.1	NA	
Permitted Option (s)	243.1	39.4	
Split Option (s)	89.6	47.3	
Minimum (s)	76.1	39.4	115.5

Right Turns	WBR
Adj Reference Time (s)	27.3
Cross Thru Ref Time (s)	24.6
Oncoming Left Ref Time (s)	19.9
Combined (s)	71.9

Intersection Summary

Intersection Capacity Utilization 96.2% ICU Level of Service F

Reference Times and Phasing Options do not represent an optimized timing plan.

HCM Signalized Intersection Capacity Analysis
C:\PR-54\PR-54 con proyecto año 2014(1.11)_PM.sy7

2: PR-54 & PR-3
12/21/2008

Movement	SEL	SET	SER	NWL	NWT	NWR	NEL	NET	NER	SWL	SWT	SWR
Lane Configurations												
Ideal Flow (vphpl)	1900	1900	1900	1900	1900	1900	1900	1900	1900	1900	1900	1900
Total Lost time (s)	4.0	4.0	4.0	4.0	4.0	4.0	4.0	4.0		4.0	4.0	
Lane Util. Factor	1.00	0.95	1.00	0.91	0.91	1.00	1.00	0.95		1.00	1.00	
Frt	1.00	1.00	0.85	1.00	1.00	0.85	1.00	0.93		1.00	0.95	
Flt Protected	0.95	1.00	1.00	0.95	0.98	1.00	0.95	1.00		0.95	1.00	
Satd. Flow (prot)	1789	3579	1601	1628	3369	1601	1789	3320		1789	1790	
Flt Permitted	0.95	1.00	1.00	0.95	0.60	1.00	0.95	1.00		0.95	1.00	
Satd. Flow (perm)	1789	3579	1601	1628	2047	1601	1789	3320		1789	1790	
Volume (vph)	102	565	75	468	441	439	29	160	149	243	176	86
Peak-hour factor, PHF	0.93	0.93	0.93	0.93	0.93	0.93	0.93	0.93	0.93	0.93	0.93	0.93
Growth Factor (vph)	111%	111%	111%	111%	111%	111%	111%	111%	111%	111%	111%	111%
Adj. Flow (vph)	122	674	90	559	526	524	35	191	178	290	210	103
RTOR Reduction (vph)	0	0	64	0	0	240	0	128	0	0	21	0
Lane Group Flow (vph)	122	674	26	280	805	284	35	241	0	290	292	0
Turn Type	Prot		Perm	Prot		Perm	Split			Split		
Protected Phases	5	2		1	6		8	8		4	4	
Permitted Phases			2			6						
Actuated Green, G (s)	6.2	23.4	23.4	11.2	28.4	28.4	10.7	10.7		18.5	18.5	
Effective Green, g (s)	6.2	23.4	23.4	11.2	28.4	28.4	10.7	10.7		18.5	18.5	
Actuated g/C Ratio	0.08	0.29	0.29	0.14	0.36	0.36	0.13	0.13		0.23	0.23	
Clearance Time (s)	4.0	4.0	4.0	4.0	4.0	4.0	4.0	4.0		4.0	4.0	
Vehicle Extension (s)	3.0	3.0	3.0	3.0	3.0	3.0	3.0	3.0		3.0	3.0	
Lane Grp Cap (vph)	139	1049	469	228	914	570	240	445		415	415	
v/s Ratio Prot	0.07	c0.19		c0.17	0.12		0.02	c0.07		0.16	c0.16	
v/s Ratio Perm			0.02		c0.19	0.18						
v/c Ratio	0.88	0.64	0.06	1.23	1.18dl	0.50	0.15	0.54		0.70	0.70	
Uniform Delay, d1	36.4	24.6	20.3	34.3	24.1	20.1	30.5	32.3		28.1	28.1	
Progression Factor	1.00	1.00	1.00	1.00	1.00	1.00	1.00	1.00		1.00	1.00	
Incremental Delay, d2	41.8	3.0	0.2	135.0	9.9	3.1	0.3	1.3		5.1	5.4	
Delay (s)	78.2	27.6	20.5	169.3	34.0	23.2	30.8	33.6		33.2	33.5	
Level of Service	E	C	C	F	C	C	C	C		C	C	
Approach Delay (s)		33.8			54.0			33.4			33.3	
Approach LOS		C			D			C			C	

Intersection Summary

HCM Average Control Delay	43.0	HCM Level of Service	D
HCM Volume to Capacity ratio	0.77		
Actuated Cycle Length (s)	79.8	Sum of lost time (s)	12.0
Intersection Capacity Utilization	74.9%	ICU Level of Service	D
Analysis Period (min)	15		

dl Defacto Left Lane. Recode with 1 though lane as a left lane.
c Critical Lane Group

Intersection Capacity Utilization
C:\PR-54\PR-54 con proyecto año 2014(1.11)_PM.sy7

2: PR-54 & PR-3
12/21/2008

Movement	SEL	SET	SER	NWL	NWT	NWR	NEL	NET	NER	SWL	SWT	SWR
Lane Configurations												
Volume (vph)	113	627	83	519	490	487	32	178	165	270	195	95
Pedestrians												
Ped Button												
Pedestrian Timing (s)												
Free Right			No			No			No			No
Ideal Flow	1900	1900	1900	1900	1900	1900	1900	1900	1900	1900	1900	1900
Lost Time (s)	4.0	4.0	4.0	4.0	4.0	4.0	4.0	4.0	4.0	4.0	4.0	4.0
Minimum Green (s)	4.0	4.0	4.0	4.0	4.0	4.0	4.0	4.0	4.0	4.0	4.0	4.0
Refr Cycle Length (s)	120											
Volume Combined (vph)	113	627	83	0	1009	487	32	343	0	270	291	0
Lane Utilization Factor	1.00	0.95	1.00	1.00	0.95	1.00	1.00	0.95	1.00	1.00	1.00	1.00
Turning Factor (vph)	0.95	1.00	0.85	0.95	0.97	0.85	0.95	0.93	0.85	0.95	0.95	0.85
Saturated Flow (vph)	1805	3618	1615	0	5287	1615	1805	3356	0	1805	1806	0
Ped Intf Time (s)	0.0	0.0	0.0	0.0	0.0	0.0	0.0	0.0	0.0	0.0	0.0	0.0
Pedestrian Frequency (%)		0.00			0.00			0.00			0.00	
Protected Option Allowed		No			No			Yes			Yes	
Reference Time (s)			6.2			36.2	2.1	12.3	0.0	17.9	19.3	0.0
Adj Reference Time (s)			10.2			40.2	8.0	16.3	0.0	21.9	23.3	0.0
Permitted Option												
Adj Saturation A (vph)	120	1809		0	176		120	1678		120	1806	
Reference Time A (s)	112.9	20.8		0.0	353.7		32.1	12.3		269.0	19.3	
Adj Saturation B (vph	NA	NA		NA	NA		NA	NA		NA	NA	
Reference Time B (s)	NA	NA		NA	NA		NA	NA		NA	NA	
Reference Time (s)		112.9			353.7			32.1			269.0	
Adj Reference Time (s)		116.9			357.7			36.1			273.0	
Split Option												
Ref Time Combined (s)	7.5	20.8		0.0	22.9		2.1	12.3		17.9	19.3	
Ref Time Seperate (s)	7.5	20.8		17.3	16.2		2.1	6.4		17.9	13.0	
Reference Time (s)	20.8	20.8		22.9	22.9		12.3	12.3		19.3	19.3	
Adj Reference Time (s)	24.8	24.8		26.9	26.9		16.3	16.3		23.3	23.3	

Summary	NW SE	NE SW	Combined
Protected Option (s)	NA	38.2	
Permitted Option (s)	357.7	273.0	
Split Option (s)	51.7	39.6	
Minimum (s)	51.7	38.2	89.9

Right Turns	SER	NWR
Adj Reference Time (s)	10.2	40.2
Cross Thru Ref Time (s)	23.3	16.3
Oncoming Left Ref Time (s)	26.9	24.8
Combined (s)	60.4	81.3

Intersection Summary

Intersection Capacity Utilization 74.9% ICU Level of Service D

Reference Times and Phasing Options do not represent an optimized timing plan.

HCM Signalized Intersection Capacity Analysis 6: PR-54 & Ave. Centro de Convenciones
C:\PR-54\PR-54 con proyecto año 2014(1.11)_PM.sy7 12/21/2008

Movement	EBL	EBT	EBR	WBL	WBT	WBR	NBL	NBT	NBR	SBL	SBT	SBR
Lane Configurations												
Ideal Flow (vphpl)	1900	1900	1900	1900	1900	1900	1900	1900	1900	1900	1900	1900
Total Lost time (s)	4.0	4.0	4.0	4.0	4.0	4.0		4.0			4.0	
Lane Util. Factor	1.00	0.95	1.00	1.00	0.95	1.00		0.95			0.95	
Frt	1.00	1.00	0.85	1.00	1.00	0.85		0.90			0.94	
Flt Protected	0.95	1.00	1.00	0.95	1.00	1.00		1.00			0.98	
Satd. Flow (prot)	1789	3579	1601	1789	3579	1601		3190			3322	
Flt Permitted	0.95	1.00	1.00	0.95	1.00	1.00		1.00			0.98	
Satd. Flow (perm)	1789	3579	1601	1789	3579	1601		3190			3322	
Volume (vph)	140	845	67	279	931	148	54	124	408	214	213	264
Peak-hour factor, PHF	0.93	0.93	0.93	0.93	0.93	0.93	0.93	0.93	0.93	0.93	0.93	0.93
Growth Factor (vph)	111%	111%	111%	111%	111%	111%	111%	111%	111%	111%	111%	111%
Adj. Flow (vph)	167	1009	80	333	1111	177	64	148	487	255	254	315
RTOR Reduction (vph)	0	0	45	0	0	89	0	317	0	0	80	0
Lane Group Flow (vph)	167	1009	35	333	1111	88	0	382	0	0	744	0
Turn Type	Prot		Perm	Prot		Perm	Split			Split		
Protected Phases	5	2		1	6		8	8		4	4	
Permitted Phases			2			6						
Actuated Green, G (s)	12.0	35.1	35.1	20.1	43.2	43.2		16.1			33.2	
Effective Green, g (s)	12.0	35.1	35.1	20.1	43.2	43.2		16.1			33.2	
Actuated g/C Ratio	0.10	0.29	0.29	0.17	0.36	0.36		0.13			0.28	
Clearance Time (s)	4.0	4.0	4.0	4.0	4.0	4.0		4.0			4.0	
Vehicle Extension (s)	3.0	3.0	3.0	3.0	3.0	3.0		3.0			3.0	
Lane Grp Cap (vph)	178	1043	466	298	1283	574		426			915	
v/s Ratio Prot	0.09	c0.28		c0.19	0.31			c0.12			c0.22	
v/s Ratio Perm			0.02			0.06						
v/c Ratio	0.94	0.97	0.08	1.12	0.87	0.15		0.90			0.81	
Uniform Delay, d1	53.9	42.1	30.9	50.2	36.0	26.2		51.4			40.8	
Progression Factor	1.00	1.00	1.00	1.00	1.00	1.00		1.00			1.00	
Incremental Delay, d2	49.2	21.0	0.3	87.5	8.0	0.6		20.8			5.6	
Delay (s)	103.1	63.2	31.3	137.7	44.0	26.8		72.2			46.4	
Level of Service	F	E	C	F	D	C		E			D	
Approach Delay (s)		66.5			61.4			72.2			46.4	
Approach LOS		E			E			E			D	

Intersection Summary

HCM Average Control Delay	61.7	HCM Level of Service	E
HCM Volume to Capacity ratio	0.94		
Actuated Cycle Length (s)	120.5	Sum of lost time (s)	16.0
Intersection Capacity Utilization	99.4%	ICU Level of Service	F
Analysis Period (min)	15		

c Critical Lane Group

Intersection Capacity Utilization 6: PR-54 & Ave. Centro de Convenciones

C:\PR-54\PR-54 con proyecto año 2014(1.11)_PM.sy7 12/21/2008

Movement	EBL	EBT	EBR	WBL	WBT	WBR	NBL	NBT	NBR	SBL	SBT	SBR
Lane Configurations												
Volume (vph)	155	938	74	310	1033	164	60	138	453	238	236	293
Pedestrians												
Ped Button												
Pedestrian Timing (s)												
Free Right			No			No			No			No
Ideal Flow	1900	1900	1900	1900	1900	1900	1900	1900	1900	1900	1900	1900
Lost Time (s)	4.0	4.0	4.0	4.0	4.0	4.0	4.0	4.0	4.0	4.0	4.0	4.0
Minimum Green (s)	4.0	4.0	4.0	4.0	4.0	4.0	4.0	4.0	4.0	4.0	4.0	4.0
Refr Cycle Length (s)	120											
Volume Combined (vph)	155	938	74	310	1033	164	0	650	0	0	767	0
Lane Utilization Factor	1.00	0.95	1.00	1.00	0.95	1.00	1.00	0.95	1.00	1.00	0.95	1.00
Turning Factor (vph)	0.95	1.00	0.85	0.95	1.00	0.85	0.95	0.89	0.85	0.95	0.93	0.85
Saturated Flow (vph)	1805	3618	1615	1805	3618	1615	0	3225	0	0	3357	0
Ped Intf Time (s)	0.0	0.0	0.0	0.0	0.0	0.0	0.0	0.0	0.0	0.0	0.0	0.0
Pedestrian Frequency (%)		0.00			0.00			0.00			0.00	
Protected Option Allowed		Yes			Yes			No			No	
Reference Time (s)	10.3	31.1	5.5	20.6	34.3	12.2			0.0			0.0
Adj Reference Time (s)	14.3	35.1	9.5	24.6	38.3	16.2			0.0			0.0
Permitted Option												
Adj Saturation A (vph)	120	1809		120	1809		0	293		0	112	
Reference Time A (s)	155.0	31.1		308.8	34.3		0.0	84.2		0.0	254.7	
Adj Saturation B (vph	NA	NA		NA	NA		NA	NA		NA	NA	
Reference Time B (s)	NA	NA		NA	NA		NA	NA		NA	NA	
Reference Time (s)		155.0			308.8			84.2			254.7	
Adj Reference Time (s)		159.0			312.8			88.2			258.7	
Split Option												
Ref Time Combined (s)	10.3	31.1		20.6	34.3		0.0	24.2		0.0	27.4	
Ref Time Seperate (s)	10.3	31.1		20.6	34.3		4.0	5.2		15.8	8.6	
Reference Time (s)	31.1	31.1		34.3	34.3		24.2	24.2		27.4	27.4	
Adj Reference Time (s)	35.1	35.1		38.3	38.3		28.2	28.2		31.4	31.4	

Summary	EB WB	NB SB	Combined
Protected Option (s)	59.7	NA	
Permitted Option (s)	312.8	258.7	
Split Option (s)	73.4	59.6	
Minimum (s)	59.7	59.6	119.3

Right Turns	EBR	WBR
Adj Reference Time (s)	9.5	16.2
Cross Thru Ref Time (s)	31.4	28.2
Oncoming Left Ref Time (s)	24.6	14.3
Combined (s)	65.5	58.7

Intersection Summary

Intersection Capacity Utilization 99.4% ICU Level of Service F

Reference Times and Phasing Options do not represent an optimized timing plan.

HCM Signalized Intersection Capacity Analysis 12: PR-54 & Ave. Marcelino Blondet
C:\PR-54\PR-54 con proyecto año 2014(1.11)_PM.sy7 12/21/2008

Movement	EBL	EBT	EBR	WBL	WBT	WBR	NBL	NBT	NBR	SBL	SBT	SBR
Lane Configurations												
Ideal Flow (vphpl)	1900	1900	1900	1900	1900	1900	1900	1900	1900	1900	1900	1900
Total Lost time (s)	4.0	4.0		4.0	4.0		4.0	4.0			4.0	
Lane Util. Factor	1.00	0.91		1.00	0.91		0.91	0.91			0.95	
Frt	1.00	0.95		1.00	1.00		1.00	0.92			0.98	
Flt Protected	0.95	1.00		0.95	1.00		0.95	0.99			0.99	
Satd. Flow (prot)	1789	4888		1789	5120		1628	3109			3465	
Flt Permitted	0.95	1.00		0.95	1.00		0.95	0.99			0.99	
Satd. Flow (perm)	1789	4888		1789	5120		1628	3109			3465	
Volume (vph)	131	1108	543	186	716	21	362	149	336	127	341	74
Peak-hour factor, PHF	0.93	0.93	0.93	0.93	0.93	0.93	0.93	0.93	0.93	0.93	0.93	0.93
Growth Factor (vph)	111%	111%	111%	111%	111%	111%	111%	111%	111%	111%	111%	111%
Adj. Flow (vph)	156	1322	648	222	855	25	432	178	401	152	407	88
RTOR Reduction (vph)	0	66	0	0	2	0	0	182	0	0	10	0
Lane Group Flow (vph)	156	1904	0	222	878	0	300	529	0	0	637	0
Turn Type	Prot			Prot			Split			Split		
Protected Phases	5	2		1	6		8	8		4	4	
Permitted Phases												
Actuated Green, G (s)	15.3	39.3		12.1	36.1		27.3	27.3			27.2	
Effective Green, g (s)	15.3	39.3		12.1	36.1		27.3	27.3			27.2	
Actuated g/C Ratio	0.13	0.32		0.10	0.30		0.22	0.22			0.22	
Clearance Time (s)	4.0	4.0		4.0	4.0		4.0	4.0			4.0	
Vehicle Extension (s)	3.0	3.0		3.0	3.0		3.0	3.0			3.0	
Lane Grp Cap (vph)	225	1576		178	1516		365	696			773	
v/s Ratio Prot	0.09	c0.39		c0.12	0.17		c0.18	0.17			c0.18	
v/s Ratio Perm												
v/c Ratio	0.69	1.21		1.25	0.58		0.82	0.76			0.82	
Uniform Delay, d1	51.1	41.3		54.9	36.4		45.0	44.2			45.1	
Progression Factor	1.00	1.00		1.00	1.00		1.00	1.00			1.00	
Incremental Delay, d2	8.9	99.9		149.3	1.6		13.8	4.8			7.1	
Delay (s)	60.0	141.2		204.2	38.1		58.8	49.0			52.2	
Level of Service	E	F		F	D		E	D			D	
Approach Delay (s)		135.3			71.5			51.9			52.2	
Approach LOS		F			E			D			D	

Intersection Summary

HCM Average Control Delay	92.6	HCM Level of Service	F
HCM Volume to Capacity ratio	1.01		
Actuated Cycle Length (s)	121.9	Sum of lost time (s)	16.0
Intersection Capacity Utilization	98.0%	ICU Level of Service	F
Analysis Period (min)	15		

c Critical Lane Group

Intersection Capacity Utilization — 12: PR-54 & Ave. Marcelino Blondet

C:\PR-54\PR-54 con proyecto año 2014(1.11)_PM.sy7 — 12/21/2008

Movement	EBL	EBT	EBR	WBL	WBT	WBR	NBL	NBT	NBR	SBL	SBT	SBR
Lane Configurations												
Volume (vph)	145	1230	603	206	795	23	402	165	373	141	379	82
Pedestrians												
Ped Button												
Pedestrian Timing (s)												
Free Right			No			No			No			No
Ideal Flow	1900	1900	1900	1900	1900	1900	1900	1900	1900	1900	1900	1900
Lost Time (s)	4.0	4.0	4.0	4.0	4.0	4.0	4.0	4.0	4.0	4.0	4.0	4.0
Minimum Green (s)	4.0	4.0	4.0	4.0	4.0	4.0	4.0	4.0	4.0	4.0	4.0	4.0
Refr Cycle Length (s)	120											
Volume Combined (vph)	145	1833	0	206	818	0	0	940	0	0	602	0
Lane Utilization Factor	1.00	0.91	1.00	1.00	0.91	1.00	1.00	0.95	1.00	1.00	0.95	1.00
Turning Factor (vph)	0.95	0.95	0.85	0.95	1.00	0.85	0.95	0.92	0.85	0.95	0.97	0.85
Saturated Flow (vph)	1805	4920	0	1805	5153	0	0	4994	0	0	3502	0
Ped Intf Time (s)	0.0	0.0	0.0	0.0	0.0	0.0	0.0	0.0	0.0	0.0	0.0	0.0
Pedestrian Frequency (%)		0.00			0.00			0.00			0.00	
Protected Option Allowed		Yes			Yes			No			No	
Reference Time (s)	9.7	44.7	0.0	13.7	19.0	0.0			0.0			0.0
Adj Reference Time (s)	13.7	48.7	0.0	17.7	23.0	0.0			0.0			0.0
Permitted Option												
Adj Saturation A (vph)	120	1640		120	1718		0	166		0	117	
Reference Time A (s)	145.0	44.7		205.9	19.0		0.0	289.6		0.0	144.9	
Adj Saturation B (vph	NA	NA		NA	NA		NA	NA		NA	NA	
Reference Time B (s)	NA	NA		NA	NA		NA	NA		NA	NA	
Reference Time (s)		145.0			205.9			289.6			144.9	
Adj Reference Time (s)		149.0			209.9			293.6			148.9	
Split Option												
Ref Time Combined (s)	9.7	44.7		13.7	19.0		0.0	22.6		0.0	20.6	
Ref Time Seperate (s)	9.7	30.0		13.7	18.5		13.4	6.1		9.4	12.9	
Reference Time (s)	44.7	44.7		19.0	19.0		22.6	22.6		20.6	20.6	
Adj Reference Time (s)	48.7	48.7		23.0	23.0		26.6	26.6		24.6	24.6	

Summary	EB WB	NB SB	Combined
Protected Option (s)	66.4	NA	
Permitted Option (s)	209.9	293.6	
Split Option (s)	71.7	51.2	
Minimum (s)	66.4	51.2	117.6

Right Turns	
Adj Reference Time (s)	
Cross Thru Ref Time (s)	
Oncoming Left Ref Time (s)	
Combined (s)	

Intersection Summary

Intersection Capacity Utilization 98.0% ICU Level of Service F

Reference Times and Phasing Options do not represent an optimized timing plan.

HCM Signalized Intersection Capacity Analysis
C:\PR-54\PR-54 con proyecto año 2014(1.11)_PM.sy7

7: PR-54 & PR-744
12/21/2008

Movement	EBL	EBT	EBR	WBL	WBT	WBR	NBL	NBT	NBR	SBL	SBT	SBR
Lane Configurations												
Ideal Flow (vphpl)	1900	1900	1900	1900	1900	1900	1900	1900	1900	1900	1900	1900
Total Lost time (s)	4.0	4.0		4.0	4.0	4.0		4.0			4.0	
Lane Util. Factor	1.00	0.91		1.00	0.95	1.00		1.00			1.00	
Frt	1.00	0.98		1.00	1.00	0.85		0.98			0.96	
Flt Protected	0.95	1.00		0.95	1.00	1.00		0.98			0.99	
Satd. Flow (prot)	1789	5017		1789	3579	1601		1812			1784	
Flt Permitted	0.95	1.00		0.95	1.00	1.00		0.76			0.71	
Satd. Flow (perm)	1789	5017		1789	3579	1601		1397			1292	
Volume (vph)	187	1072	208	68	849	96	93	103	31	63	87	60
Peak-hour factor, PHF	0.93	0.93	0.93	0.93	0.93	0.93	0.93	0.93	0.93	0.93	0.93	0.93
Growth Factor (vph)	111%	111%	111%	111%	111%	111%	111%	111%	111%	111%	111%	111%
Adj. Flow (vph)	223	1279	248	81	1013	115	111	123	37	75	104	72
RTOR Reduction (vph)	0	22	0	0	0	65	0	5	0	0	11	0
Lane Group Flow (vph)	223	1505	0	81	1013	50	0	266	0	0	240	0
Turn Type	Prot			Prot		Perm	Perm			Perm		
Protected Phases	5	2		1	6			8			4	
Permitted Phases						6	8			4		
Actuated Green, G (s)	17.4	52.1		7.8	42.5	42.5		25.8			25.5	
Effective Green, g (s)	17.4	52.1		7.8	42.5	42.5		25.8			25.5	
Actuated g/C Ratio	0.14	0.41		0.06	0.33	0.33		0.20			0.20	
Clearance Time (s)	4.0	4.0		4.0	4.0	4.0		4.0			4.0	
Vehicle Extension (s)	3.0	3.0		3.0	3.0	3.0		3.0			3.0	
Lane Grp Cap (vph)	245	2055		110	1196	535		283			259	
v/s Ratio Prot	c0.12	0.30		0.05	c0.28							
v/s Ratio Perm						0.03		c0.19			c0.19	
v/c Ratio	0.91	0.73		0.74	0.85	0.09		0.94			0.93	
Uniform Delay, d1	54.1	31.7		58.7	39.3	29.1		49.9			49.9	
Progression Factor	1.00	1.00		1.00	1.00	1.00		1.00			1.00	
Incremental Delay, d2	34.4	2.4		22.4	7.5	0.3		37.8			36.3	
Delay (s)	88.6	34.0		81.1	46.8	29.5		87.7			86.2	
Level of Service	F	C		F	D	C		F			F	
Approach Delay (s)		41.0			47.5			87.7			86.2	
Approach LOS		D			D			F			F	

Intersection Summary

HCM Average Control Delay	50.1	HCM Level of Service	D
HCM Volume to Capacity ratio	0.90		
Actuated Cycle Length (s)	127.2	Sum of lost time (s)	16.0
Intersection Capacity Utilization	68.4%	ICU Level of Service	C
Analysis Period (min)	15		

c Critical Lane Group

Intersection Capacity Utilization
C:\PR-54\PR-54 con proyecto año 2014(1.11)_PM.sy7

7: PR-54 & PR-744
12/21/2008

Movement	EBL	EBT	EBR	WBL	WBT	WBR	NBL	NBT	NBR	SBL	SBT	SBR
Lane Configurations												
Volume (vph)	208	1190	231	75	942	107	103	114	34	70	97	67
Pedestrians												
Ped Button												
Pedestrian Timing (s)												
Free Right			No			No			No			No
Ideal Flow	1900	1900	1900	1900	1900	1900	1900	1900	1900	1900	1900	1900
Lost Time (s)	4.0	4.0	4.0	4.0	4.0	4.0	4.0	4.0	4.0	4.0	4.0	4.0
Minimum Green (s)	4.0	4.0	4.0	4.0	4.0	4.0	4.0	4.0	4.0	4.0	4.0	4.0
Refr Cycle Length (s)	120											
Volume Combined (vph)	208	1421	0	75	942	107	0	252	0	0	233	0
Lane Utilization Factor	1.00	0.91	1.00	1.00	0.95	1.00	1.00	1.00	1.00	1.00	1.00	1.00
Turning Factor (vph)	0.95	0.98	0.85	0.95	1.00	0.85	0.95	0.96	0.85	0.95	0.94	0.85
Saturated Flow (vph)	1805	5049	0	1805	3618	1615	0	1823	0	0	1791	0
Ped Intf Time (s)	0.0	0.0	0.0	0.0	0.0	0.0	0.0	0.0	0.0	0.0	0.0	0.0
Pedestrian Frequency (%)		0.00			0.00			0.00			0.00	
Protected Option Allowed		Yes			Yes			No			No	
Reference Time (s)	13.8	33.8	0.0	5.0	31.3	7.9			0.0			0.0
Adj Reference Time (s)	17.8	37.8	0.0	9.0	35.3	11.9			0.0			0.0
Permitted Option												
Adj Saturation A (vph)	120	1683		120	1809		0	1209		0	1528	
Reference Time A (s)	207.0	33.8		75.3	31.3		0.0	25.0		0.0	18.3	
Adj Saturation B (vph	NA	NA		NA	NA		NA	NA		NA	NA	
Reference Time B (s)	NA	NA		NA	NA		NA	NA		NA	NA	
Reference Time (s)		207.0			75.3			25.0			18.3	
Adj Reference Time (s)		211.0			79.3			29.0			22.3	
Split Option												
Ref Time Combined (s)	13.8	33.8		5.0	31.3		0.0	16.6		0.0	15.6	
Ref Time Seperate (s)	13.8	28.3		5.0	31.3		6.9	7.5		4.6	6.5	
Reference Time (s)	33.8	33.8		31.3	31.3		16.6	16.6		15.6	15.6	
Adj Reference Time (s)	37.8	37.8		35.3	35.3		20.6	20.6		19.6	19.6	

Summary	EB WB	NB SB	Combined
Protected Option (s)	53.1	NA	
Permitted Option (s)	211.0	29.0	
Split Option (s)	73.0	40.2	
Minimum (s)	53.1	29.0	82.1

Right Turns	WBR
Adj Reference Time (s)	11.9
Cross Thru Ref Time (s)	20.6
Oncoming Left Ref Time (s)	17.8
Combined (s)	50.3

Intersection Summary

Intersection Capacity Utilization 68.4% ICU Level of Service C

Reference Times and Phasing Options do not represent an optimized timing plan.

ESTUDIO DE TRANSITO

Brisa del Mar II
Guayama, Puerto Rico

Adendum
Abril de 2009

Servicios Técnicos Integrados
Guaynabo, Puerto Rico

Brisa del Mar II

Guayama, Puerto Rico

TABLA DE CONTENIDO

LISTA DE ANEJOS 3

SECCION 1.0
MEMORIAL EXPLICATIVO 4

SECCION 2.0
ANALISIS DE TRANSITO 6

SECCION 3.0
CONCLUSIONES 8

LISTA DE ANEJOS

Anejo 1 .....Análisis del Tránsito 2014, Escenario A

Anejo 6 .....Análisis del Tránsito 2014, Escenario B

SECCION 1.0

MEMORIAL EXPLICATIVO

La firma desarrolladora KARTIK S.E., propone la construcción de la segunda fase de un desarrollo residencial en el Barrio Machete del Municipio de Guayama. El proyecto esta ubicado en una finca localizada al sur de la Carretera Estatal PR-54 con acceso por la Ave. Centro de Convenciones y por la Ave, Marcelino "El Indio" Blondet..El proyecto propuesto contara de 576 unidades de vivienda unifamiliares y 176 apartamentos.

En Diciembre del año 2008 se sometió a la Autoridad de Carreteras y Transportación (ACT) un estudio de transito revisado, realizado por Servicios Técnicos Integrados (STI) para este proyecto. La ACT acepta los resultados presentados en el informe de diciembre de 2008, pero considera que existen demoras excesivas por lo que solo aprueba la construcción de la Fase IV del proyecto hasta tanto se construya la Avenida Periferal

El Miércoles 22 de abril de 2009, se llevo a cabo una reunión en la oficina del Ing, Candido Camacho, en la que se discutieron los detalles del proyecto y el porque no era factible la construcción de la fase IV solamente, En esta reunión se pidió al proponente que analizara la posibilidad de mejoras geométricas en las intersecciones de mayor congestión de la carretera PR-54, como medida de mitigación al impacto en el flujo vehicular.

En este Adendum se presentan dos escenarios alternos, en los cuales se propone una nueva geometría en la intersección de la PR-54 – Ave. Marcelino "El Indio" Blondet, con la finalidad de proveer dos carriles de viraje a la izquierda desde el acceso este de la intersección.

:

Escenario A: el cual contempla la construcción de las fases IV y V del proyecto.

Escenario B: el cual contempla la construcción de las fases IV, V y VI del proyecto

Se analizan las siguientes intersecciones, que son las que presentan demoras excesivas para el año 2014:

- PR-54 – Ave. Marcelino "El Indio" Blondet (Modificada)
- PR-54 & PR-744

La Figura 1 presenta la geometría propuesta para la intersección de la PR-54 – Ave. Marcelino "El Indio" Blondet.

Figura 1: Geometría Int. PR-54 – Ave. Marcelino "El Indio" Blondet (Modificada)

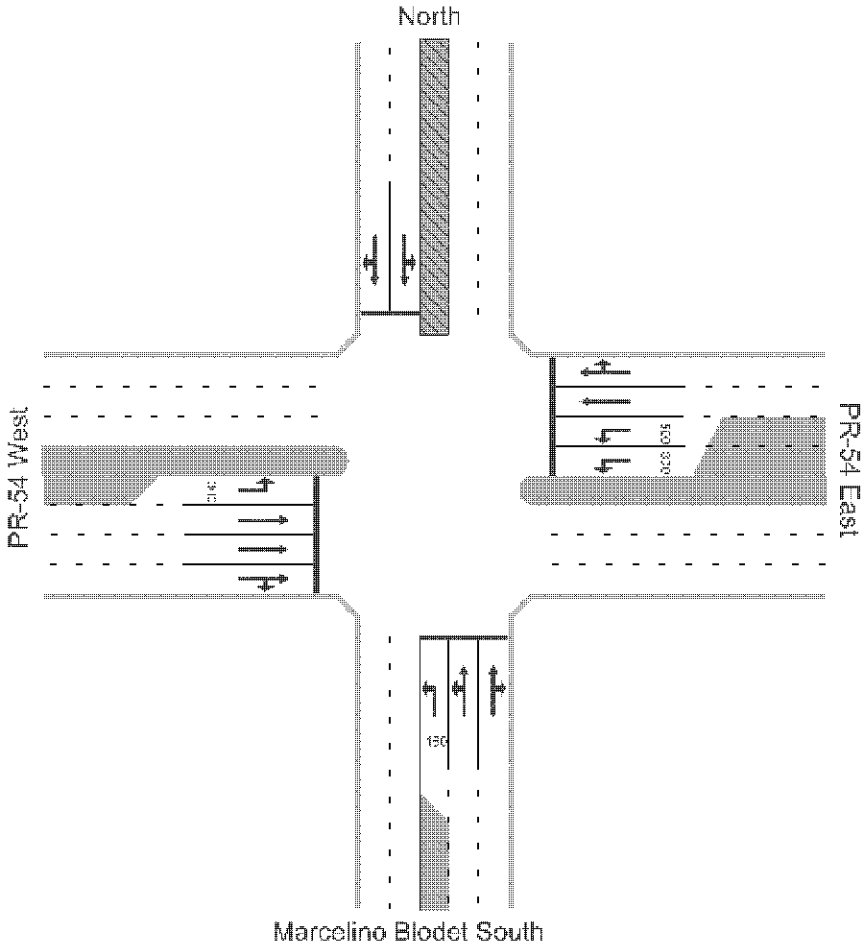

SECCION 2.0

ANALISIS DE TRANSITO

La Tabla 2 Presenta los resultados obtenidos en el estudio de diciembre de 2008, el cual incluye las fases IV, V y VI del proyecto.

Tabla Núm. 2B
Resultados Análisis de Tránsito Año 2014

Intersecciones	Hora Pico	Demora (Seg)		Nivel de Servicio	
		Sin Proyecto	Con Proyecto	Sin Proyecto	Con Proyecto
PR-54 & PR-3	AM	58.4	56.8	E	E
	PM	39.8	43.0	D	D
PR-54 & Ave. Centro de Convenciones	AM	55.8	65.0	E	E
	PM	48.5	61.7	D	E
PR-54 – Ave. Marcelino "El Indio" Blondet	AM	105.5	127.4	F	F
	PM	42.3	92.6	D	F
PR-54 & PR-744	AM	82.1	106.1	F	F
	PM	36.0	50.1	D	D

La Tabla 2-B1 Presenta los resultados obtenidos en este Adendum, para el escenario A, el cual incluye las fases IV, y V del proyecto y las mejoras propuestas en la Int.PR-54 – Ave. Marcelino "El Indio" Blondet.

Tabla Núm. 2-B1 Resultados Análisis de Tránsito Año 2014 (Escenario A)					
Intersecciones	**Hora Pico**	**Demora (Seg)**		**Nivel de Servicio**	
		Sin Proyecto	**Con Proyecto**	**Sin Proyecto**	**Con Proyecto**
PR-54 & PR-3	AM	58.4	56.8	E	E
	PM	39.8	43.0	D	D
PR-54 & Ave. Centro de Convenciones	AM	55.8	65.0	E	E
	PM	48.5	61.7	D	E
PR-54 – Ave. Marcelino "El Indio" Blondet	AM	105.5	96.2	F	F
	PM	42.3	63.9	D	E
PR-54 & PR-744	AM	82.1	87.3	F	F
	PM	36.0	44.0	D	D

La Tabla 2-B2 Presenta los resultados obtenidos en este Adendum, para el escenario B, el cual incluye las fases IV, V y VI del proyecto y las mejoras propuestas en la Int.PR-54 – Ave. Marcelino "El Indio" Blondet.

Tabla Núm. 2-B2 Resultados Análisis de Tránsito Año 2014 (Escenario B)					
Intersecciones	**Hora Pico**	**Demora (Seg)**		**Nivel de Servicio**	
		Sin Proyecto	**Con Proyecto**	**Sin Proyecto**	**Con Proyecto**
PR-54 & PR-3	AM	58.4	56.8	E	E
	PM	39.8	43.0	D	D
PR-54 & Ave. Centro de Convenciones	AM	55.8	65.0	E	E
	PM	48.5	61.7	D	E
PR-54 – Ave. Marcelino "El Indio" Blondet	AM	105.5	108.9	F	F
	PM	42.3	69.7	D	E
PR-54 & PR-744	AM	82.1	106.1	F	F
	PM	36.0	50.1	D	D

SECCION 3.0

CONCLUSIONES

Basándonos en los resultados obtenidos de este estudio se puede llegar a las siguientes conclusiones:

1) Con las mejoras propuesta se mitigara el impacto del flujo vehicular generado por la Fases IV y V del proyecto Brisa del Mar II.

2) El volumen vehicular que generarán las Fases IV y V del desarrollo propuesto, no impactara el tránsito del área en forma significativa ya que las intersecciones tendrán niveles de servicios similares a los que tendrían sin proyecto para el 2014.

3) En los referente a la Fase VI del desarrollo, su impacto al tránsito es mínimo ya que no provoca demoras excesivas.

Por lo tanto recomendamos la construcción del desarrollo propuesto y las mejoras a la Int. PR-54 – Ave. Marcelino "El Indio" Blondet, según presentado en este Adendum.

Francisco Reyes

Planificador Urbano
Licencia Núm. 336

ANEJOS

ANEJO 1

ANALISIS DEL TRANSITO 2014

ESCENARIO A

Int. PR-54 & Ave. Marcelino Blondet, Hora Pico AM, 2014 Proyecto
Escenario A

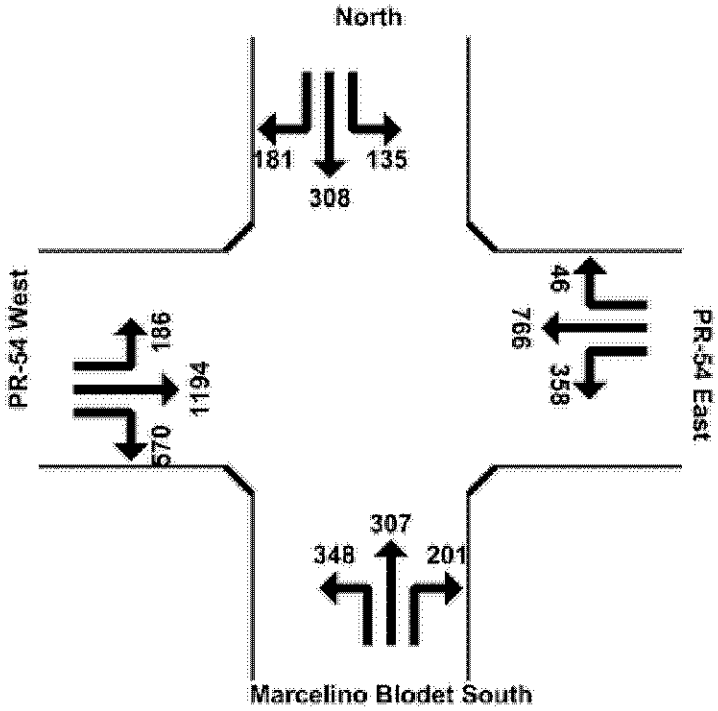

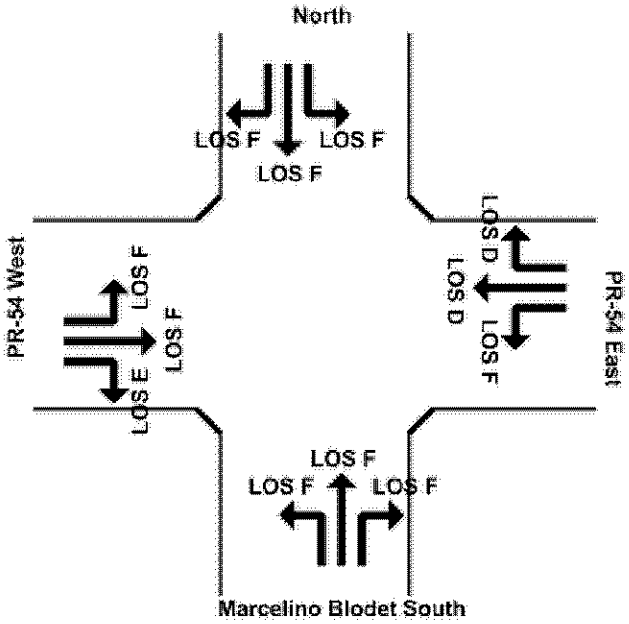

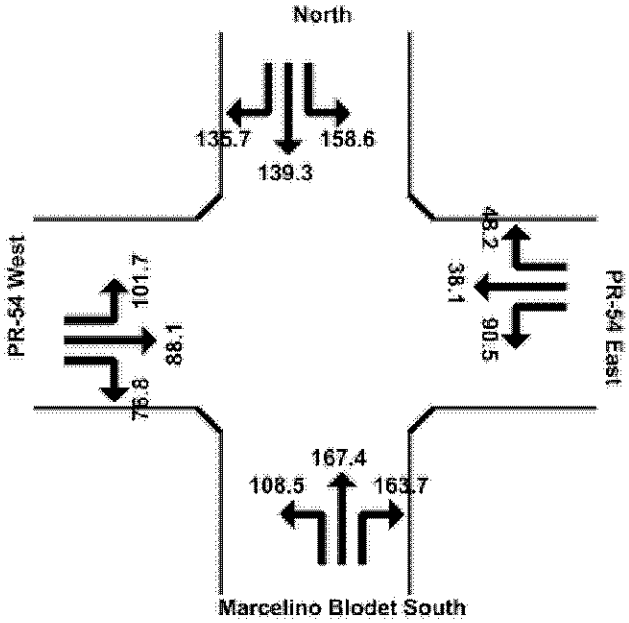

```
                Akcelik & Associates Pty Ltd - aaSIDRA 2.0.0.205
               ----------------------------------------------------
               Servicios Técnicos Integrados
               Francisco J. Reyes        Registered User No. 50310
               Licence Type: Professional, Single Computer

               Time and Date of Analysis    1:04 AM, Apr 26,2009

 Filename: F:\My Documents\Francisco\Consultores\Perez Blair\Guayama\Brisa del
Mar II\SIDRA-09\HOPAM14P-a.OUT

 Brisa del Mar
 Int. PR-54 & Ave. Marcelino Blondet, Hora PIco AM, 2014 Proyecto Modificado
 Intersection ID:     4

 aaTraffic SIDRA US Highway Capacity Manual (2000) Version


 RUN INFORMATION
 ---------------
 Parameter sensitivity run: "Optimum" Maximum Green =  55.0 %

 * Basic Parameters:
   Intersection Type: Signalised - Actuated Isolated
   For fully-actuated signal timings, the following specifications will be
ignored:
     Any maximum cycle time specification
     Any user-given cycle time (unless phase times also given)
     User-given cycle and phase times (if variable flow scale run)
     Any variable cycle time specification
     Any green split priority specification
   Driving on the right-hand side of the road
   Input data specified in US units
   Default Values File No. 11
   Peak flow period (for performance): 15 minutes
   Unit time (for volumes): 60 minutes (Total Flow Period)
   Delay definition: Control delay
                     Geometric delay included
   HCM Delay and Queue Models option selected
   Level of Service based on: Delay (HCM method)
   Queue definition: Back of queue, 95th Percentile

 * No. of Main (Timing-Capacity) Iterations =  1
   Comparison of last two iterations:
     Difference in intersection degree of satn =  0.0 %
     Difference in total vehicle capacity      =  0.0 %
     Largest difference in eff. green times =  0 secs
     (max. value for stopping = 0 secs)
```

```
 Brisa del Mar
 Int. PR-54 & Ave. Marcelino Blondet, Hora PIco AM, 2014 Proyecto Modificado
 Intersection ID:     4



 DEFAULT PARAMETERS
 ------------------
```

Default values for some of the important general parameters:
(Default Values File: DEF11.SDF)

1. Basic saturation flow: 1900 tcu/h

   This value applies mainly to signalised intersections. For roundabouts and sign-controlled intersections, it is used for determining capacity of priority and continuous movements.

2. Through car equivalents for signalised intersections

	L E F T		THROUGH		R I G H T	
	LV	HV	LV	HV	LV	HV
Normal	1.053	2.000	1.000	2.000	1.176	2.000
Restricted	1.303	2.500			1.426	2.500

3. Opposed turn parameters (Signalised intersection)

	Crit. Gap	Fol.up Hdway	Deps at End	% Exit Flow Opposing
Left turns :	4.5	2.5	2.0	0
Right turns:	4.0	2.4	2.5	0

4. Cruise speed= 40 mi/h, Approach Distance= 1800 ft

5. Queue space per vehicle in feet
   Light vehicles: 25.0 Heavy vehicles: 45.0

A full list of input data defaults and ranges is given in the Input Guide part of aaSIDRA User Guide.

Brisa del Mar
Int. PR-54 & Ave. Marcelino Blondet, Hora PIco AM, 2014 Proyecto Modificado
Intersection ID: 4
Actuated Isolated Signals, Cycle Time = 83
Flow Scale = 111%

Table S.0 - TRAFFIC FLOW DATA

Mov No.	Left LV	Left HV	Through LV	Through HV	Right LV	Right HV	Flow Scale	Peak Flow Factor
VEHICLES Demand flows in veh/hour as used by the program								
West: PR-54 West								
12	240	3	0	0	0	0	1.11	0.85
11	0	0	1546	13	0	0	1.11	0.85
13	0	0	0	0	734	10	1.11	0.85
South: Marcelino Blodet South								
32	452	3	0	0	0	0	1.11	0.85
31	0	0	390	10	0	0	1.11	0.85
33	0	0	0	0	256	7	1.11	0.85
East: PR-54 East								
22	465	3	0	0	0	0	1.11	0.85
21	0	0	947	54	0	0	1.11	0.85
23	0	0	0	0	60	0	1.11	0.85

```
North:  North
        42          175     1      0     0      0     0   1.11   0.85
        41            0     0    401     1      0     0   1.11   0.85
        43            0     0      0     0    229     8   1.11   0.85
-----------------------------------------------------------------------
Based on unit time =  60 minutes.
Flow Scale and Peak Hour Factor effects included in flow values.
```

```
Brisa del Mar
Int. PR-54 & Ave. Marcelino Blondet, Hora PIco AM, 2014 Proyecto Modificado
Intersection ID:     4
            Actuated Isolated Signals, Cycle Time =  83
Flow Scale = 111%

Table S.1 - MOVEMENT PHASE AND TIMING PARAMETERS
-------------------------------------------------------------------------------
 Mov     Mov    P H A S E  M A T R I X    Lost Tim  Req.Mov.Time     Eff. Grn
 No.     Typ  First Green   Second Green  --------  ------------     --------
              ------------  ------------  1st  2nd  1st      2nd     1st  2nd
              Fr To Op Pr   Fr To Op Pr   Grn  Grn  Grn      Grn     Grn  Grn
-------------------------------------------------------------------------------
West: PR-54 West
  12 L       *C  D                        4        15.0Max           11
  11 T        D  A                        4        32.0Max           28
  13 R  (Un1) A  D  R      *D  A         20    4   30.0Min  32.0Max  31   28
-------------------------------------------------------------------------------
South: Marcelino Blodet South
  32 L        A  B                        4        18.0Max           14
  31 T       *A  B                        4        18.0Max           14
  33 R  (Un2) A  B          B  A  R       4   36   18.0Max  30.0Min  14   29
-------------------------------------------------------------------------------
East: PR-54 East
  22 L        C  D                        4        15.0Max           11
  21 T        D  A                        4        32.0Max           28
  23 R  (Un1) A  D  R       D  A         20    4   30.0Min  30.2     31   28
-------------------------------------------------------------------------------
North:  North
  42 L        B  C                        4        18.0Max           14
  41 T       *B  C                        4        18.0Max           14
  43 R  (Un2) B  C          C  B  R       4   35   18.0Max  30.0Min  14   30
-------------------------------------------------------------------------------
  Current Phase Sequence No.: 1
  Input phase sequence: A  B  C  D
  Output phase sequence: A  B  C  D
-------------------------------------------------------------------------------

Movement Types:                          Under heading 'Op':
  Ped  Pedestrian                          L   "Left" turns are opposed
  Dum  Dummy                               R   "Right" turns are opposed
  Und  Undetected in both green periods    LR  "Left and Right" opposed
  Un1  Undetected in 1st green period      C   "Constant" saturation flow
  Un2  Undetected in 2nd green period
```

```
Brisa del Mar
Int. PR-54 & Ave. Marcelino Blondet, Hora PIco AM, 2014 Proyecto Modificado
Intersection ID:     4
            Actuated Isolated Signals, Cycle Time =  83
```

Flow Scale = 111%

Table S.2 - MOVEMENT CAPACITY PARAMETERS

Mov No.	Dem Flow (veh /h)	Satn Flow 1st Grn	Satn Flow 2nd Grn	Flow Ratio 1st Grn	Flow Ratio 2nd Grn	Total Cap. (veh /h)	Prac. Deg. Satn xp	Prac. Spare Cap. (%)	Lane Util (%)	Deg. Satn x
West: PR-54 West										
12 L	243	1879		0.129		249	0.90	-8	100	0.976
11 T	1559	4278		0.364		1443	0.90	-17	100	1.080
13 R	744	551	1432	0.163	0.457	689	0.90	-17	100	1.080
South: Marcelino Blodet South										
32 L	455	2147<		0.212		362	0.90	-28	80	1.256
31 T	400	1887		0.212		318	0.90	-28	100	1.257*
33 R	263	913	158	0.288	0.000	209	0.90	-28	100	1.257*
East: PR-54 East										
22 L	468	3778		0.124		501	0.90	-4	100	0.935
21 T	1001	3580		0.280		1208	0.90	9	100	0.829
23 R	60	19	193	0.000	0.311	72	0.90	8	100	0.831
North: North										
42 L	176	881		0.200		149	0.90	-24	100	1.184
41 T	402	2012		0.200		339	0.90	-24	100	1.185
43 R	237	885	140	0.268	0.000	200	0.90	-24	100	1.186

< Reduced saturation flow due to a short lane effect

Brisa del Mar
Int. PR-54 & Ave. Marcelino Blondet, Hora PIco AM, 2014 Proyecto Modificado
Intersection ID: 4
Actuated Isolated Signals, Cycle Time = 83
Flow Scale = 111%

Table S.3 - INTERSECTION PARAMETERS

Crit Mov No.	App. & Turn	Green Period	Phases Fr	Phases To	Adjusted Lost Time	Adjusted Flow Ratio	Required Grn Time Ratio	Required Movement Time
31	S_T		A	B	18	-	-	18.0Max
41	N_T		B	C	18	-	-	18.0Max
12	W_L		C	D	15	-	-	15.0Max
13	W_R	2nd	D	A	32	-	-	32.0Max
				Total:	83	0.000	0.000	83.0

- Flow ratio not used for cycle time calculations and the adjusted lost time equals the required movement time (=Min or Max as shown in Table S.1)

Cycle Time:

Minimum	Maximum	Practical	Chosen
40	NA	84	83

Intersection Level of Service	=	F
Worst movement Level of Service	=	F
Average intersection delay (s)	=	96.2
Largest average movement delay (s)	=	167.4
Largest back of queue, 95% (ft)	=	1187
Performance Index	=	481.41
Degree of saturation (highest)	=	1.257
Practical Spare Capacity (lowest)	=	-28 %
Total vehicle capacity, all lanes (veh/h)	=	5792
Total vehicle flow (veh/h)	=	6008
Total person flow (pers/h)	=	7210
Total vehicle delay (veh-h/h)	=	160.53
Total person delay (pers-h/h)	=	192.64
Total effective vehicle stops (veh/h)	=	7261
Total effective person stops (pers/h)	=	8713
Total vehicle travel (veh-mi/h)	=	2536.0
Total cost ($/h)	=	2459.29
Total fuel (ga/h)	=	198.5
Total CO2 (kg/h)	=	1880.03

Brisa del Mar
Int. PR-54 & Ave. Marcelino Blondet, Hora PIco AM, 2014 Proyecto Modificado
Intersection ID: 4
Actuated Isolated Signals, Cycle Time = 83
Flow Scale = 111%

Table S.4 - PHASE INFORMATION

Phase No.	Change Time	Green Start	Displayed Green	Grn+Intgrn Secs	Prop.
A	0	4	14	18	0.217
B	18	22	14	18	0.217
C	36	40	11	15	0.181
D	51	55	28	32	0.386

Current Phase Sequence No.: 1
Input phase sequence: A B C D
Output phase sequence: A B C D

Brisa del Mar
Int. PR-54 & Ave. Marcelino Blondet, Hora PIco AM, 2014 Proyecto Modificado
Intersection ID: 4
Actuated Isolated Signals, Cycle Time = 83
Flow Scale = 111%

Table S.14 - SUMMARY OF INPUT AND OUTPUT DATA

Lane No.	Demand Flow (veh/h) L	T	R	Tot	%HV	Adj. Basic Satf.	Eff Grn (secs) 1st	2nd	Deg Sat x	Aver. Delay (sec)	Longest Queue (ft)	Shrt Lane (ft)
West: PR-54 West												
1 L	243			243	1	2000	11		0.976	101.7	421*	300
2 T		723		723	1	2000	28		1.080	89.7	1187	
3 T		723		723	1	2000	28		1.080	89.7	1187	
4 TR		114	744	858	1	2000	16	28	1.080	75.5	1043	

```
        ---------------------------------------------------------------------
        243 1559  744  2546    1                1.080   86.1  1187
-------------------------------------------------------------------------------
 South: Marcelino Blodet South
1 L     256             256    1  2000   14      1.000   47.4r  307*  160
2 LT    199  208        407    2  2000   14      1.257  183.2   947
3 TR         192  263   455    3  2000   14   5  1.257  159.8   853
        ---------------------------------------------------------------------
        455  400  263  1118    2                1.257  142.5   947
-------------------------------------------------------------------------------
 East: PR-54 East
1 L     234             234    1  2000   11      0.935   90.5   384*  300
2 L     234             234    1  2000   11      0.935   90.5   384   500
3 T          531        531    5  2000   28      0.829   37.7   664
4 TR         470   60   530    5  2000    1  28  0.829   39.6   652
        ---------------------------------------------------------------------
        468 1001   60  1529    4                0.935   54.5   664
-------------------------------------------------------------------------------
 North:  North
1 LT    176  213        389    0  2000   14      1.184  154.3   828
2 TR         189  237   426    2  2000   14   5  1.184  131.6   715
        ---------------------------------------------------------------------
        176  402  237   815    1                1.184  142.4   828
===============================================================================
 ALL VEHICLES          Total   %       Cycle      Max   Aver.   Max
                       Flow   HV       Time        X    Delay  Queue
                       6008    2         83      1.257   96.2  1187
===============================================================================
Total flow period = 60 minutes.  Peak flow period = 15 minutes.

Queue values in this table are 95% back of queue (feet).

Note: Basic Saturation Flows (in through car units) have been adjusted for
      grade, lane widths, parking manoeuvres and bus stops.

  *  Queue length exceeds short lane length due to specification of a
     percentile queue in the aaSIDRA Configuration File. For calculation
     of this statistic, you may specify the lane with full length.

  r  Delay, stops and queue length for this lane have been cut down to fit in
     the queuing space.  The amount cut may not be accounted for fully in the
     adjacent lane performance statistics.  You may wish to change the short
     lane to a full lane to investigate the extent of this effect.
```

```
Brisa del Mar
Int. PR-54 & Ave. Marcelino Blondet, Hora PIco AM, 2014 Proyecto Modificado
Intersection ID:     4
            Actuated Isolated Signals, Cycle Time =  83
Flow Scale = 111%

Table S.15 - CAPACITY AND LEVEL OF SERVICE
-----------------------------------------------------------------
 Mov      Mov    Green Time  Total  Total    Deg.   Aver.   LOS
 No.      Typ    Ratio (g/C) Flow   Cap.     of    Delay
               ------------ (veh   (veh     Satn
                1st   2nd     /h)    /h)    (v/c)  (sec)
                grn   grn
-----------------------------------------------------------------
```

```
West: PR-54 West
  12 L        0.133*          243    249   0.976   101.7    F
  11 T        0.337          1559   1443   1.080    88.1    F
  13 R  (Un1) 0.373  0.337*   744    689   1.080    76.8    E
              ----------------------------------------------
                             2546   2381   1.080    86.1    F
-------------------------------------------------------------
South: Marcelino Blodet South
  32 L        0.169           455    362<  1.256   108.5    F
  31 T        0.169*          400    318   1.257*  167.4    F
  33 R  (Un2) 0.169  0.349    263    209   1.257*  163.7    F
              ----------------------------------------------
                             1118    890   1.257   142.5    F
-------------------------------------------------------------
East: PR-54 East
  22 L        0.133           468    501   0.935    90.5    F
  21 T        0.337          1001   1208   0.829    38.1    D
  23 R  (Un1) 0.373  0.337     60     72   0.831    48.2    D
              ----------------------------------------------
                             1529   1781   0.935    54.5    D
-------------------------------------------------------------
North:  North
  42 L        0.169           176    149   1.184   158.6    F
  41 T        0.169*          402    339   1.185   139.3    F
  43 R  (Un2) 0.169  0.361    237    200   1.186   135.7    F
              ----------------------------------------------
                              815    688   1.186   142.4    F
-------------------------------------------------------------
  ALL VEHICLES:              6008   5792   1.257    96.2    F
-------------------------------------------------------------
  INTERSECTION (persons):    7210   5792   1.257    96.2
-------------------------------------------------------------
     Level of Service calculations are based on
     average control delay including geometric delay (HCM criteria),
     independent of the current delay definition used.
     For the criteria, refer to the "Level of Service" topic in the
     aaSIDRA Output Guide or the Output section of the on-line help.
  <  Reduced capacity due to a short lane effect
  *  Maximum v/c ratio, or critical green periods
```

Brisa del Mar
Int. PR-54 & Ave. Marcelino Blondet, Hora PIco AM, 2014 Proyecto Modificado
Intersection ID: 4

Scaled sensitivity parameter: Maximum Green

Table V.23 - INTERSECTION SUMMARY FOR VARIABLE PARAMETER SCALE

Param Scale (%)	Cycle Time (sec)	Total Veh. Cap.	Intersn Deg. of Satn	Prac. Spare Cap.	Aver. Delay (sec)	Stop Rate	Longest Queue (veh)	Perf. Index	Cost Total $/h
50	77	5689	1.221	-26	98.0	1.25	47.8	480.8	2492.3
55	83	5792	1.257	-28	96.2	1.21	47.2	481.4	2459.3
60	88	5838	1.269	-29	96.2	1.19	48.3	486.8	2459.3
65	94	5918	1.298	-31	96.2	1.16	48.5	493.1	2456.2
70	101	5913	1.268	-29	96.4	1.15	51.9	503.2	2466.0
75	107	5979	1.293	-30	97.0	1.13	52.5	511.0	2472.2
80	112	6004	1.302	-31	98.2	1.12	54.0	520.5	2494.2

85	118	6059	1.324	-32	99.5	1.11	54.8	530.4	2511.8
90	125	6044	1.298	-31	100.3	1.10	58.1	542.4	2532.8
95	131	6090	1.319	-32	101.9	1.09	59.2	553.0	2556.4
100	136	6107	1.325	-32	103.4	1.09	60.8	563.0	2581.8
105	142	6146	1.342	-33	105.0	1.08	62.0	574.2	2606.8
110	149	6126	1.320	-32	105.8	1.07	65.2	585.7	2627.5
115	155	6115	1.335	-33	107.9	1.06	66.6	597.9	2660.1
120	160	6107	1.341	-33	109.5	1.06	68.3	608.3	2687.6

--- End of aaSIDRA Output ---

Int. PR-54 & Ave. Marcelino Blondet, Hora Plco PM, 2014, Escenario A

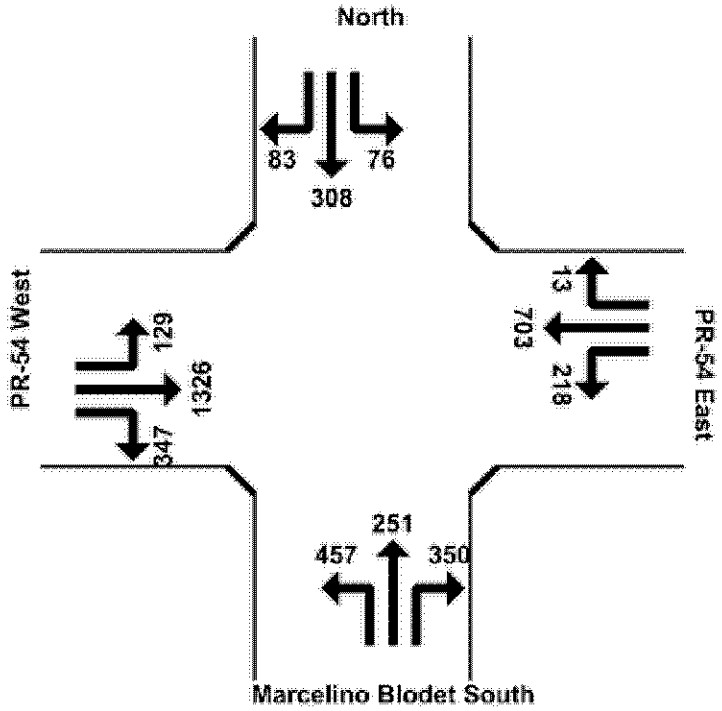

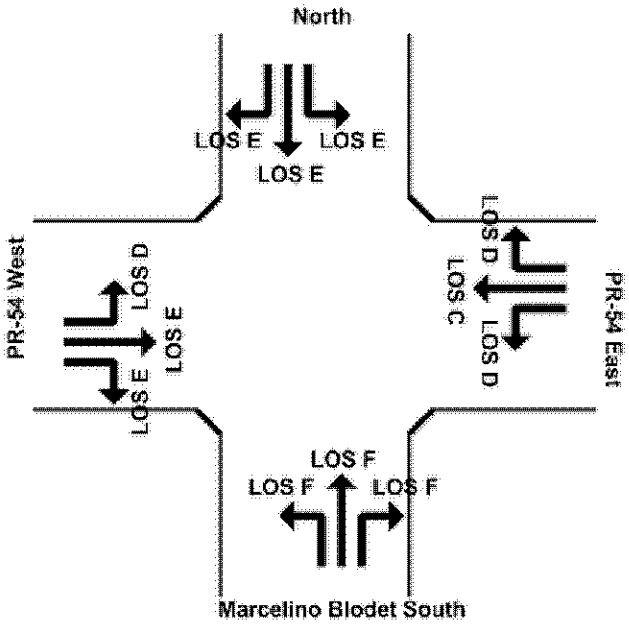

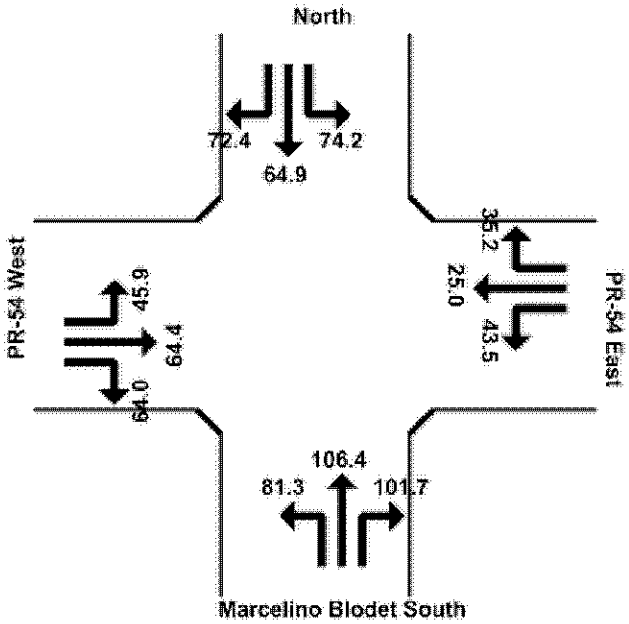

```
                 Akcelik & Associates Pty Ltd - aaSIDRA 2.0.0.205
                ----------------------------------------------------
                Servicios Técnicos Integrados
                Francisco J. Reyes        Registered User No. 50310
                Licence Type: Professional, Single Computer

                Time and Date of Analysis    1:02 AM, Apr 26,2009

 Filename: F:\My Documents\Francisco\Consultores\Perez Blair\Guayama\Brisa del Mar
II\SIDRA-09\HOPPM14P-a.OUT

 Brisa del Mar
 Int. PR-54 & Ave. Marcelino Blondet, Hora PIco PM, 2014 con Proyecto Modifi
 Intersection ID:     4

 aaTraffic SIDRA US Highway Capacity Manual (2000) Version


 RUN INFORMATION
 ---------------
 Parameter sensitivity run: "Optimum" Maximum Green =  50.0 %

 * Basic Parameters:
   Intersection Type: Signalised - Actuated Isolated
   For fully-actuated signal timings, the following specifications will be ignored:
     Any maximum cycle time specification
     Any user-given cycle time (unless phase times also given)
     User-given cycle and phase times (if variable flow scale run)
     Any variable cycle time specification
     Any green split priority specification
   Driving on the right-hand side of the road
   Input data specified in US units
   Default Values File No. 11
   Peak flow period (for performance): 15 minutes
   Unit time (for volumes): 60 minutes (Total Flow Period)
   Delay definition: Control delay
                     Geometric delay included
   HCM Delay and Queue Models option selected
   Level of Service based on: Delay (HCM method)
   Queue definition: Back of queue, 95th Percentile

 * No. of Main (Timing-Capacity) Iterations =  1
   Comparison of last two iterations:
     Difference in intersection degree of satn =  0.0 %
     Difference in total vehicle capacity      =  0.0 %
     Largest difference in eff. green times =  0 secs
     (max. value for stopping = 0 secs)
```

```
 Brisa del Mar
 Int. PR-54 & Ave. Marcelino Blondet, Hora PIco PM, 2014 con Proyecto Modifi
 Intersection ID:     4



 DEFAULT PARAMETERS
 ------------------
```

Default values for some of the important general parameters:
(Default Values File: DEF11.SDF)

1. Basic saturation flow: 1900 tcu/h

   This value applies mainly to signalised intersections. For roundabouts and sign-controlled intersections, it is used for determining capacity of priority and continuous movements.

2. Through car equivalents for signalised intersections

	L E F T		THROUGH		R I G H T	
	LV	HV	LV	HV	LV	HV
Normal	1.053	2.000	1.000	2.000	1.176	2.000
Restricted	1.303	2.500			1.426	2.500

3. Opposed turn parameters (Signalised intersection)

	Crit. Gap	Fol.up Hdway	Deps at End	% Exit Flow Opposing
Left turns :	4.5	2.5	2.0	0
Right turns:	4.0	2.4	2.5	0

4. Cruise speed= 40 mi/h, Approach Distance= 1800 ft

5. Queue space per vehicle in feet
   Light vehicles: 25.0 Heavy vehicles: 45.0

A full list of input data defaults and ranges is given in the Input Guide part of aaSIDRA User Guide.

Brisa del Mar
Int. PR-54 & Ave. Marcelino Blondet, Hora PIco PM, 2014 con Proyecto Modifi
Intersection ID: 4
Actuated Isolated Signals, Cycle Time = 73
Flow Scale = 111%

Table S.0 - TRAFFIC FLOW DATA

Mov No.	Left LV	Left HV	Through LV	Through HV	Right LV	Right HV	Flow Scale	Peak Flow Factor
VEHICLES Demand flows in veh/hour as used by the program								
West: PR-54 West								
12	168	0	0	0	0	0	1.11	0.85
11	0	0	1732	0	0	0	1.11	0.85
13	0	0	0	0	453	0	1.11	0.85
South: Marcelino Blodet South								
32	597	0	0	0	0	0	1.11	0.85
31	0	0	328	0	0	0	1.11	0.85
33	0	0	0	0	457	0	1.11	0.85
East: PR-54 East								
22	285	0	0	0	0	0	1.11	0.85
21	0	0	918	0	0	0	1.11	0.85
23	0	0	0	0	17	0	1.11	0.85
North: North								

```
        42            99     0      0     0      0     0   1.11   0.85
        41             0     0    402     0      0     0   1.11   0.85
        43             0     0      0     0    108     0   1.11   0.85
-----------------------------------------------------------------------
Based on unit time =  60 minutes.
Flow Scale and Peak Hour Factor effects included in flow values.
```

```
Brisa del Mar
Int. PR-54 & Ave. Marcelino Blondet, Hora PIco PM, 2014 con Proyecto Modifi
Intersection ID:     4
            Actuated Isolated Signals, Cycle Time =  73
Flow Scale = 111%

Table S.1 - MOVEMENT PHASE AND TIMING PARAMETERS
-------------------------------------------------------------------------------
 Mov     Mov    P H A S E  M A T R I X    Lost Tim  Req.Mov.Time     Eff. Grn
 No.     Typ  First Green   Second Green  --------  ------------     --------
              ------------  ------------  1st  2nd  1st      2nd     1st  2nd
              Fr To Op Pr   Fr To Op Pr   Grn  Grn  Grn      Grn     Grn  Grn
-------------------------------------------------------------------------------
West: PR-54 West
  12 L       *C  D                         2        13.0Max           11
  11 T        D  A                         2        28.0Max           26
  13 R  (Un1) A  D  R      *D  A          14    3   27.0Min  28.0Max  31   25
-------------------------------------------------------------------------------
South: Marcelino Blodet South
  32 L        A  B                         2        18.0Max           16
  31 T        A  B                         2        18.0Max           16
  33 R  (Un2)*A  B          B  A  R        2   29   18.0Max  27.0Min  16   26
-------------------------------------------------------------------------------
East: PR-54 East
  22 L        C  D                         2        13.0Max           11
  21 T        D  A                         2        27.3              26
  23 R  (Un1) A  D  R       D  A          14    3   27.0Min  24.6     31   25
-------------------------------------------------------------------------------
North:  North
  42 L        B  C                         2        14.0Max           12
  41 T       *B  C                         2        14.0Max           12
  43 R  (Un2) B  C          C  B  R        2   28   14.0Max  27.0Min  12   31
-------------------------------------------------------------------------------
  Current Phase Sequence No.: 1
  Input phase sequence: A  B  C  D
  Output phase sequence: A  B  C  D
-------------------------------------------------------------------------------

Movement Types:                            Under heading 'Op':
  Ped  Pedestrian                            L   "Left" turns are opposed
  Dum  Dummy                                 R   "Right" turns are opposed
  Und  Undetected in both green periods      LR  "Left and Right" opposed
  Un1  Undetected in 1st green period        C   "Constant" saturation flow
  Un2  Undetected in 2nd green period
```

```
Brisa del Mar
Int. PR-54 & Ave. Marcelino Blondet, Hora PIco PM, 2014 con Proyecto Modifi
Intersection ID:     4
            Actuated Isolated Signals, Cycle Time =  73
Flow Scale = 111%
```

Table S.2 - MOVEMENT CAPACITY PARAMETERS

Mov No.	Dem Flow (veh /h)	Satn Flow 1st Grn	Satn Flow 2nd Grn	Flow Ratio 1st Grn	Flow Ratio 2nd Grn	Total Cap. (veh /h)	Prac. Deg. Satn xp	Prac. Spare Cap. (%)	Lane Util (%)	Deg. Satn x
West: PR-54 West										
12 L	168	1900		0.088		286	0.90	53	100	0.587
11 T	1732	4757		0.364		1694	0.90	-12	100	1.022
13 R	453	185	1064	0.203	0.390	443	0.90	-12	100	1.023
South: Marcelino Blodet South										
32 L	597	2417<		0.247		530	0.90	-20	89	1.127*
31 T	328	1328		0.247		291	0.90	-20	100	1.127*
33 R	457	1240	376	0.369	0.000	406	0.90	-20	100	1.126
East: PR-54 East										
22 L	285	3800		0.075		573	0.90	81	100	0.498
21 T	918	3926		0.234		1398	0.90	37	100	0.657
23 R	17	10	64	0.000	0.266	26	0.90	39	100	0.650
North: North										
42 L	99	654		0.151		108	0.90	-2	100	0.921
41 T	402	2658		0.151		437	0.90	-2	100	0.920
43 R	108	563	59	0.192	0.000	118	0.90	-2	100	0.918

< Reduced saturation flow due to a short lane effect

Brisa del Mar
Int. PR-54 & Ave. Marcelino Blondet, Hora PIco PM, 2014 con Proyecto Modifi
Intersection ID: 4
Actuated Isolated Signals, Cycle Time = 73
Flow Scale = 111%

Table S.3 - INTERSECTION PARAMETERS

Crit Mov No.	App. & Turn	Green Period	Phases Fr	Phases To	Adjusted Lost Time	Adjusted Flow Ratio	Required Grn Time Ratio	Required Movement Time
33	S_R	1st	A	B	18	-	-	18.0Max
41	N_T		B	C	14	-	-	14.0Max
12	W_L		C	D	13	-	-	13.0Max
13	W_R	2nd	D	A	28	-	-	28.0Max
				Total:	73	0.000	0.000	73.0

- Flow ratio not used for cycle time calculations and the adjusted lost time equals the required movement time (=Min or Max as shown in Table S.1)

Cycle Time:

Minimum	Maximum	Practical	Chosen
36	NA	74	73

Intersection Level of Service = E

```
   Worst movement Level of Service           =         F
   Average intersection delay (s)            =      63.9
   Largest average movement delay (s)        =     106.4
   Largest back of queue, 95% (ft)           =       993
   Performance Index                         =    348.19
   Degree of saturation (highest)            =     1.127
   Practical Spare Capacity (lowest)         =       -20 %
   Total vehicle capacity, all lanes (veh/h) =      6343
   Total vehicle flow (veh/h)                =      5564
   Total person flow (pers/h)                =      6677
   Total vehicle delay (veh-h/h)             =     98.72
   Total person delay (pers-h/h)             =    118.46
   Total effective vehicle stops (veh/h)     =      6082
   Total effective person stops (pers/h)     =      7298
   Total vehicle travel (veh-mi/h)           =    2367.1
   Total cost ($/h)                          =   1779.55
   Total fuel (ga/h)                         =     157.6
   Total CO2 (kg/h)                          =   1491.41
```

```
Brisa del Mar
Int. PR-54 & Ave. Marcelino Blondet, Hora PIco PM, 2014 con Proyecto Modifi
Intersection ID:     4
            Actuated Isolated Signals, Cycle Time =  73
Flow Scale = 111%

Table S.4 - PHASE INFORMATION
--------------------------------------------------
   Phase    Change   Green  Displayed  Grn+Intgrn
    No.      Time    Start    Green    Secs  Prop.
--------------------------------------------------
    A          0       3        15      18  0.247
    B         18      21        11      14  0.192
    C         32      35        10      13  0.178
    D         45      48        25      28  0.384
--------------------------------------------------
  Current Phase Sequence No.: 1
  Input phase sequence: A  B  C  D
  Output phase sequence: A  B  C  D
```

```
Brisa del Mar
Int. PR-54 & Ave. Marcelino Blondet, Hora PIco PM, 2014 con Proyecto Modifi
Intersection ID:     4
            Actuated Isolated Signals, Cycle Time =  73
Flow Scale = 111%

Table S.14 - SUMMARY OF INPUT AND OUTPUT DATA
-------------------------------------------------------------------------------
 Lane   Demand Flow (veh/h)       Adj.  Eff Grn   Deg   Aver. Longest Shrt
 No.   --------------------  %HV  Basic  (secs)   Sat   Delay  Queue  Lane
          L    T    R   Tot       Satf. 1st 2nd    x    (sec)   (ft)  (ft)
-------------------------------------------------------------------------------
 West: PR-54 West
1 L     168             168    0  2000   11      0.587   45.9   197   300
2 T          728        728    0  2000   26      1.022   66.3   993
3 T          728        728    0  2000   26      1.022   66.3   993
4 TR         276  453   729    0  2000    6  26  1.022   60.3   834
        ---------------------------------------------------------------
```

```
        168 1732  453  2353    0                 1.022   63.0   993
-------------------------------------------------------------------------
 South: Marcelino Blodet South
1 L     305             305    0  2000   16      1.000   39.4r  307*  160
2 LT    292  186        479    0  2000   16      1.127  121.8   847
3 TR         142  457   599    0  2000   16   9  1.127   99.6   801
        ----------------------------------------------------------------
        597  328  457  1382    0                 1.127   94.0   847
-------------------------------------------------------------------------
 East: PR-54 East
1 L     143             143    0  2000   11      0.498   43.5   164   300
2 L     143             143    0  2000   11      0.498   43.5   164   500
3 T          468        468    0  2000   26      0.657   24.6   445
4 TR         450   17   467    0  2000    1  26  0.657   25.8   440
        ----------------------------------------------------------------
        285  918   17  1220    0                 0.657   29.5   445
-------------------------------------------------------------------------
 North:  North
1 LT     99  198        297    0  2000   12      0.920   69.2   413
2 TR         204  108   312    0  2000   12   3  0.920   66.5   402
        ----------------------------------------------------------------
         99  402  108   609    0                 0.920   67.8   413
=========================================================================
 ALL VEHICLES          Total   %       Cycle      Max   Aver.   Max
                       Flow   HV       Time        X    Delay  Queue
                       5564    0         73      1.127   63.9   993
=========================================================================
Total flow period = 60 minutes.  Peak flow period = 15 minutes.

Queue values in this table are 95% back of queue (feet).

Note: Basic Saturation Flows (in through car units) have been adjusted for
      grade, lane widths, parking manoeuvres and bus stops.

  *  Queue length exceeds short lane length due to specification of a
     percentile queue in the aaSIDRA Configuration File. For calculation
     of this statistic, you may specify the lane with full length.

  r  Delay, stops and queue length for this lane have been cut down to fit in
     the queuing space.  The amount cut may not be accounted for fully in the
     adjacent lane performance statistics.  You may wish to change the short
     lane to a full lane to investigate the extent of this effect.
```

```
Brisa del Mar
Int. PR-54 & Ave. Marcelino Blondet, Hora PIco PM, 2014 con Proyecto Modifi
Intersection ID:     4
            Actuated Isolated Signals, Cycle Time =  73
Flow Scale = 111%

Table S.15 - CAPACITY AND LEVEL OF SERVICE
-------------------------------------------------------------
 Mov     Mov    Green Time  Total  Total    Deg.   Aver.   LOS
 No.     Typ    Ratio (g/C) Flow    Cap.     of    Delay
               ------------ (veh   (veh     Satn
                1st   2nd     /h)    /h)    (v/c)  (sec)
                grn   grn
-------------------------------------------------------------
West: PR-54 West
```

```
  12 L        0.151*          168    286   0.587    45.9    D
  11 T        0.356          1732   1694   1.022    64.4    E
  13 R  (Un1) 0.425  0.342*   453    443   1.023    64.0    E
              ------------------------------------------------
                             2353   2424   1.023    63.0    E
-------------------------------------------------------------
South: Marcelino Blodet South
  32 L        0.219           597    530<  1.127*   81.3    F
  31 T        0.219           328    291   1.127*  106.4    F
  33 R  (Un2) 0.219* 0.356    457    406   1.126   101.7    F
              ------------------------------------------------
                             1382   1227   1.127    94.0    F
-------------------------------------------------------------
East: PR-54 East
  22 L        0.151           285    573   0.498    43.5    D
  21 T        0.356           918   1398   0.657    25.0    C
  23 R  (Un1) 0.425  0.342     17     26   0.650    35.2    D
              ------------------------------------------------
                             1220   1997   0.657    29.5    C
-------------------------------------------------------------
North:  North
  42 L        0.164            99    108   0.921    74.2    E
  41 T        0.164*          402    437   0.920    64.9    E
  43 R  (Un2) 0.164  0.425    108    118   0.918    72.4    E
              ------------------------------------------------
                              609    662   0.921    67.8    E
-------------------------------------------------------------
  ALL VEHICLES:              5564   6343   1.127    63.9    E
-------------------------------------------------------------
  INTERSECTION (persons):    6677   6343   1.127    63.9
-------------------------------------------------------------
     Level of Service calculations are based on
     average control delay including geometric delay (HCM criteria),
     independent of the current delay definition used.
     For the criteria, refer to the "Level of Service" topic in the
     aaSIDRA Output Guide or the Output section of the on-line help.
  <  Reduced capacity due to a short lane effect
  *  Maximum v/c ratio, or critical green periods
```

Brisa del Mar
Int. PR-54 & Ave. Marcelino Blondet, Hora PIco PM, 2014 con Proyecto Modifi
Intersection ID: 4

Scaled sensitivity parameter: Maximum Green

Table V.23 - INTERSECTION SUMMARY FOR VARIABLE PARAMETER SCALE

Param Scale (%)	Cycle Time (sec)	Total Veh. Cap.	Intersn Deg. of Satn	Prac. Spare Cap.	Aver. Delay (sec)	Stop Rate	Longest Queue (veh)	Perf. Index	Cost Total $/h
50	73	6343	1.127	-20	63.9	1.09	39.7	348.2	1779.5
55	80	6375	1.137	-21	65.6	1.08	41.2	361.2	1810.3
60	85	6388	1.169	-23	69.2	1.08	42.7	376.3	1866.4
65	92	6411	1.176	-23	72.2	1.08	44.4	394.0	1926.2
70	97	6420	1.203	-25	75.7	1.08	46.8	408.9	1982.5
75	105	6412	1.222	-26	79.6	1.07	50.7	428.7	2047.8
80	110	6420	1.244	-28	83.0	1.07	53.7	443.2	2102.6
85	117	6434	1.246	-28	84.9	1.06	56.3	456.0	2135.0

90	122	6440	1.266	-29	88.1	1.06	59.1	470.2	2187.3
95	129	6452	1.267	-29	90.2	1.06	61.5	483.0	2221.4
100	134	6456	1.285	-30	93.3	1.06	64.2	496.7	2272.2
105	141	6465	1.285	-30	95.3	1.05	66.6	509.7	2305.4
110	146	6422	1.301	-31	98.4	1.05	69.1	523.2	2355.1
115	153	6411	1.299	-31	100.5	1.04	71.5	536.4	2389.2
120	158	6395	1.314	-32	103.4	1.04	73.9	549.5	2437.0

--- End of aaSIDRA Output ---

Int. PR-54 & PR-744, Hora Pico AM, Año 2014, Escenario A

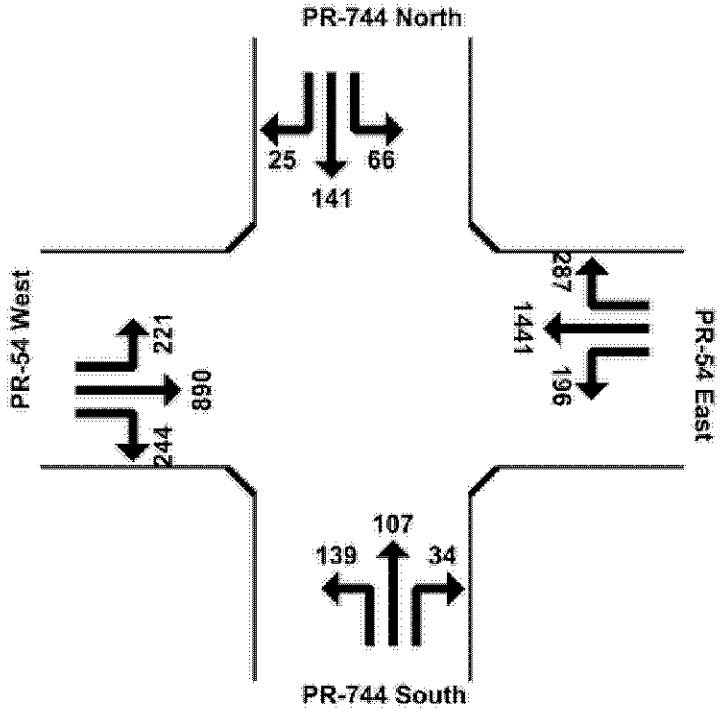

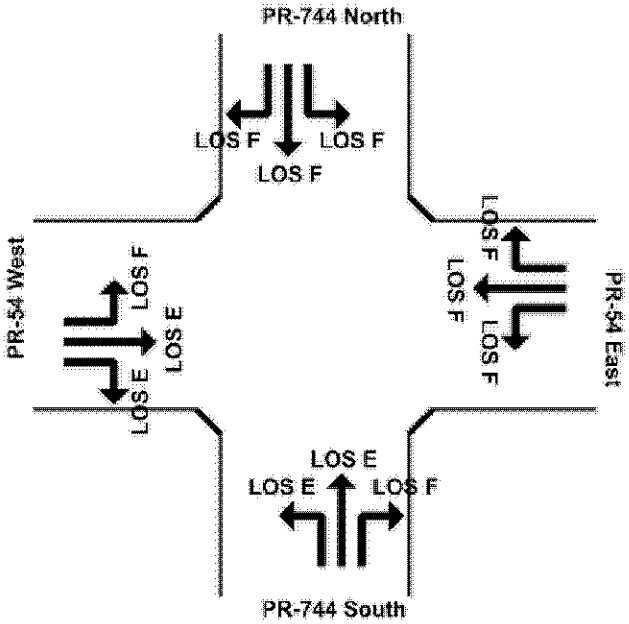

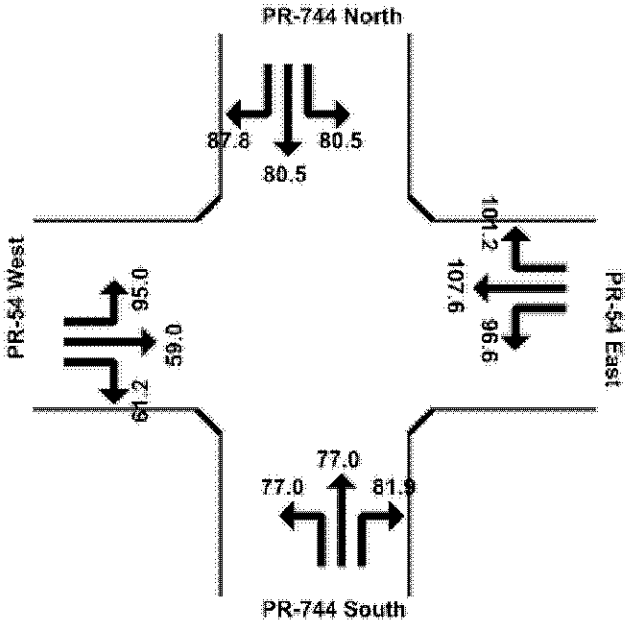

```
                 Akcelik & Associates Pty Ltd - aaSIDRA 2.0.0.205
                ----------------------------------------------------
                Servicios Técnicos Integrados
                Francisco J. Reyes        Registered User No. 50310
                Licence Type: Professional, Single Computer

                Time and Date of Analysis    2:11 AM, Apr 26,2009

 Filename: F:\My Documents\Francisco\Consultores\Perez Blair\Guayama\Brisa del Mar
II\SIDRA-09\744AM14P-a.OUT

 Brisa del Mar
 Int. PR-54 & PR-744, Hora PIco AM, A?o 2014 con Proyecto Modificado
 Intersection ID:     4

 aaTraffic SIDRA US Highway Capacity Manual (2000) Version


 RUN INFORMATION
 ---------------
 Parameter sensitivity run: "Optimum" Maximum Green = 115.0 %

 * Basic Parameters:
   Intersection Type: Signalised - Actuated Isolated
   For fully-actuated signal timings, the following specifications will be ignored:
     Any maximum cycle time specification
     Any user-given cycle time (unless phase times also given)
     User-given cycle and phase times (if variable flow scale run)
     Any variable cycle time specification
     Any green split priority specification
   Driving on the right-hand side of the road
   Input data specified in US units
   Default Values File No. 11
   Peak flow period (for performance): 15 minutes
   Unit time (for volumes): 60 minutes (Total Flow Period)
   Delay definition: Control delay
                     Geometric delay included
   HCM Delay and Queue Models option selected
   Level of Service based on: Delay (HCM method)
   Queue definition: Back of queue, 95th Percentile

 * No. of Main (Timing-Capacity) Iterations =  3
   Comparison of last two iterations:
     Difference in intersection degree of satn =  0.5 %
     Difference in total vehicle capacity      =  0.4 %
     Largest difference in eff. green times =  1 secs
     (max. value for stopping = 1 secs)
   Information on Previous Iteration:
     Cycle Time = 176
     Phase Times: 0,  42,  89, 115
     Critical Movements: 42, 32, 12, 23(2nd)

 * Movement   12 has large x because of short lanes.
   The degree of saturation of adjacent movement   11 is less than xp,
   hence this solution may be satisfactory.
   See Table S.7 for queue length, delay etc.
```

Brisa del Mar
Int. PR-54 & PR-744, Hora PIco AM, A?o 2014 con Proyecto Modificado
Intersection ID: 4

DEFAULT PARAMETERS

Default values for some of the important general parameters:
(Default Values File: DEF11.SDF)

1. Basic saturation flow: 1900 tcu/h

   This value applies mainly to signalised intersections. For roundabouts and sign-controlled intersections, it is used for determining capacity of priority and continuous movements.

2. Through car equivalents for signalised intersections

	L E F T		THROUGH		R I G H T	
	LV	HV	LV	HV	LV	HV
Normal	1.053	2.000	1.000	2.000	1.176	2.000
Restricted	1.303	2.500			1.426	2.500

3. Opposed turn parameters (Signalised intersection)

	Crit. Gap	Fol.up Hdway	Deps at End	% Exit Flow Opposing
Left turns :	4.5	2.5	2.0	0
Right turns:	4.0	2.4	2.5	0

4. Cruise speed= 40 mi/h, Approach Distance= 1800 ft

5. Queue space per vehicle in feet
   Light vehicles: 25.0 Heavy vehicles: 45.0

A full list of input data defaults and ranges is given in the Input Guide part of aaSIDRA User Guide.

Brisa del Mar
Int. PR-54 & PR-744, Hora PIco AM, A?o 2014 con Proyecto Modificado
Intersection ID: 4
Actuated Isolated Signals, Cycle Time = 175
Flow Scale = 111%

Table S.0 - TRAFFIC FLOW DATA

Mov No.	Left LV	Left HV	Through LV	Through HV	Right LV	Right HV	Flow Scale	Peak Flow Factor
VEHICLES	Demand flows in veh/hour as used by the program							
West: PR-54 West								
12	245	10	0	0	0	0	1.11	0.96
11	0	0	977	52	0	0	1.11	0.96
13	0	0	0	0	279	3	1.11	0.96
South: PR-744 South								
32	161	0	124	0	0	0	1.11	0.96

```
        33             0     0      0     0     41     0   1.11   0.92
-----------------------------------------------------------------------
East: PR-54 East
        22           225     1      0     0      0     0   1.11   0.96
        21             0     0   1629    37      0     0   1.11   0.96
        23             0     0      0     0    327     5   1.11   0.96
-----------------------------------------------------------------------
North: PR-744 North
        42            75     1    163     0      0     0   1.11   0.96
        43             0     0      0     0     29     1   1.11   0.92
-----------------------------------------------------------------------
Based on unit time =  60 minutes.
Flow Scale and Peak Hour Factor effects included in flow values.
```

```
Brisa del Mar
Int. PR-54 & PR-744, Hora PIco AM, A?o 2014 con Proyecto Modificado
Intersection ID:     4
            Actuated Isolated Signals, Cycle Time = 175
Flow Scale = 111%

Table S.1 - MOVEMENT PHASE AND TIMING PARAMETERS
-------------------------------------------------------------------------------
 Mov     Mov    P H A S E  M A T R I X    Lost Tim  Req.Mov.Time     Eff. Grn
 No.     Typ  First Green   Second Green  --------  ------------     --------
              ------------  ------------  1st  2nd  1st      2nd     1st  2nd
              Fr To Op Pr   Fr To Op Pr   Grn  Grn  Grn      Grn     Grn  Grn
-------------------------------------------------------------------------------
West: PR-54 West
  12 L       *E  F                         3        26.0Max           23
  11 LT       F  C                         3        54.6              58
  13 R  (Un1) C  F  R       F  C          36    3   27.0Min  51.3     78   58
-------------------------------------------------------------------------------
South: PR-744 South
  32 LT      *D  E                         3        46.0              43
  33 R  (Und) D  E          E  D  R        3   40   36.4     27.0Min  43   89
-------------------------------------------------------------------------------
East: PR-54 East
  22 L        E  F                         3        26.0Max           23
  21 T        F  C                         3        61.0Max           58
  23 R  (Un1) C  F  R      *F  C          32    3   27.0Min  61.0Max  82   58
-------------------------------------------------------------------------------
North: PR-744 North
  42 LT      *C  D                         3        41.7              39
  43 R  (Un2) C  D          D  C  R        3   72   32.0     27.0Min  39   61
-------------------------------------------------------------------------------
  Current Phase Sequence No.: 2
  Input phase sequence: C  D  E  F
  Output phase sequence: C  D  E  F
-------------------------------------------------------------------------------

Movement Types:                            Under heading 'Op':
  Ped  Pedestrian                            L   "Left" turns are opposed
  Dum  Dummy                                 R   "Right" turns are opposed
  Und  Undetected in both green periods      LR  "Left and Right" opposed
  Un1  Undetected in 1st green period        C   "Constant" saturation flow
  Un2  Undetected in 2nd green period
```

Brisa del Mar
Int. PR-54 & PR-744, Hora PIco AM, A?o 2014 con Proyecto Modificado
Intersection ID: 4
Actuated Isolated Signals, Cycle Time = 175
Flow Scale = 111%

Table S.2 - MOVEMENT CAPACITY PARAMETERS

Mov No.	Dem Flow (veh /h)	Satn Flow 1st Grn	Satn Flow 2nd Grn	Flow Ratio 1st Grn	Flow Ratio 2nd Grn	Total Cap. (veh /h)	Prac. Deg. Satn xp	Prac. Spare Cap. (%)	Lane Util (%)	Deg. Satn x
West: PR-54 West										
12 L	221	1684<		0.131		221	0.90	-10	100	1.000
11 LT	1063E	4493		0.237		1489	0.90	26	100	0.714
13 R	282	86	1076	0.000	0.262	395	0.90	26	100	0.714
South: PR-744 South										
32 LT	285	1683		0.169		414	0.90	31	100	0.689
33 R	41	226	8	0.181	0.000	60	0.90	31	100	0.688
East: PR-54 East										
22 L	226	1734<		0.130		228	0.90	-9	100	0.992
21 T	1666	4826		0.345		1599	0.90	-14	100	1.042*
23 R	332	47	895	0.000	0.371	319	0.90	-14	100	1.042*
North: PR-744 North										
42 LT	239	1723		0.139		384	0.90	45	100	0.622
43 R	30	199	11	0.151	0.000	48	0.90	45	100	0.623

E "Excess" flow from the short lane of an adjacent movement added to normal flow
< Reduced saturation flow due to a short lane effect

Movement 12 has large x because of short lanes.
The degree of saturation of adjacent movement 11 is less than xp, hence this solution may be satisfactory.
See Table S.7 for queue length, delay etc.

Brisa del Mar
Int. PR-54 & PR-744, Hora PIco AM, A?o 2014 con Proyecto Modificado
Intersection ID: 4
Actuated Isolated Signals, Cycle Time = 175
Flow Scale = 111%

Table S.3 - INTERSECTION PARAMETERS

Crit Mov No.	App. & Turn	Green Period	Phases Fr	Phases To	Adjusted Lost Time	Adjusted Flow Ratio	Required Grn Time Ratio	Required Movement Time
42	N_LT		C	D	3	0.139	0.221	41.7
32	S_LT		D	E	3	0.169	0.246	46.0
12	W_L		E	F	26	-	-	26.0Max
23	E_R	2nd	F	C	61	-	-	61.0Max
				Total:	93	0.308	0.466	174.6

```
---------------------------------------------------------------------------
  -  Flow ratio not used for cycle time calculations and
     the adjusted lost time equals the required movement time
     (=Min or Max as shown in Table S.1)

   Cycle Time:
     Minimum   Maximum   Practical   Chosen
        36        NA        175        175

   Intersection Level of Service              =         F
   Worst movement Level of Service            =         F
   Average intersection delay (s)             =      87.3
   Largest average movement delay (s)         =     107.6
   Largest back of queue, 95% (ft)            =      1772
   Performance Index                          =    416.49
   Degree of saturation (highest)             =     1.042
   Practical Spare Capacity (lowest)          =       -14 %
   Total vehicle capacity, all lanes (veh/h) =      5157
   Total vehicle flow (veh/h)                 =      4385
   Total person flow (pers/h)                 =      5262
   Total vehicle delay (veh-h/h)              =    106.36
   Total person delay (pers-h/h)              =    127.63
   Total effective vehicle stops (veh/h)      =      4229
   Total effective person stops (pers/h)      =      5075
   Total vehicle travel (veh-mi/h)            =    1866.3
   Total cost ($/h)                           =   1767.27
   Total fuel (ga/h)                          =     144.5
   Total CO2 (kg/h)                           =   1369.32
```

```
Brisa del Mar
Int. PR-54 & PR-744, Hora PIco AM, A?o 2014 con Proyecto Modificado
Intersection ID:     4
            Actuated Isolated Signals, Cycle Time = 175
Flow Scale = 111%

Table S.4 - PHASE INFORMATION
--------------------------------------------------
   Phase    Change   Green  Displayed  Grn+Intgrn
    No.      Time    Start    Green    Secs  Prop.
--------------------------------------------------
    C          0       3        39      42  0.240
    D         42      45        43      46  0.263
    E         88      91        23      26  0.149
    F        114     117        58      61  0.349
--------------------------------------------------
  Current Phase Sequence No.: 2
  Input phase sequence: C  D  E  F
  Output phase sequence: C  D  E  F
```

```
Brisa del Mar
Int. PR-54 & PR-744, Hora PIco AM, A?o 2014 con Proyecto Modificado
Intersection ID:     4
            Actuated Isolated Signals, Cycle Time = 175
Flow Scale = 111%

Table S.14 - SUMMARY OF INPUT AND OUTPUT DATA
---------------------------------------------------------------------------
```

Lane No.	Demand Flow (veh/h) L	T	R	Tot	%HV	Adj. Basic Satf.	Eff Grn (secs) 1st	2nd	Deg Sat x	Aver. Delay (sec)	Longest Queue (ft)	Shrt Lane (ft)
West: PR-54 West												
1 L	221			221	4	2000	23		1.000	95.0r	544*	300
2 LT	221	417		450	7	2000	58		0.714	60.4	965	
3 T		450		450	5	2000	58		0.714	60.4	966	
4 TR		162	282	444	3	2000	7	58	0.714	57.6	851	
	255	1029	282	1566	5				1.000	64.5	966	
South: PR-744 South												
1 LTR	161	124	41	326	0	2000	43	1	0.689	77.6	719	
	161	124	41	326	0				0.689	77.6	719	
East: PR-54 East												
1 L	226			226	0	2000	23		0.992	96.6r	543*	300
2 T		675		675	2	2000	58		1.042	111.4	1772	
3 T		675		675	2	2000	58		1.042	111.4	1772	
4 TR		315	332	647	2	2000	4	58	1.042	96.5	1456	
	226	1666	332	2224	2				1.042	105.5	1772	
North: PR-744 North												
1 LTR	76	163	30	269	1	2000	39	1	0.622	81.3	601	
	76	163	30	269	1				0.622	81.3	601	

ALL VEHICLES	Total Flow	% HV	Cycle Time	Max X	Aver. Delay	Max Queue
	4385	3	175	1.042	87.3	1772

Total flow period = 60 minutes. Peak flow period = 15 minutes.

Queue values in this table are 95% back of queue (feet).

Note: Basic Saturation Flows (in through car units) have been adjusted for grade, lane widths, parking manoeuvres and bus stops.

* Queue length exceeds short lane length due to specification of a percentile queue in the aaSIDRA Configuration File. For calculation of this statistic, you may specify the lane with full length.

r Delay, stops and queue length for this lane have been cut down to fit in the queuing space. The amount cut may not be accounted for fully in the adjacent lane performance statistics. You may wish to change the short lane to a full lane to investigate the extent of this effect.

Brisa del Mar
Int. PR-54 & PR-744, Hora PIco AM, A?o 2014 con Proyecto Modificado
Intersection ID: 4
Actuated Isolated Signals, Cycle Time = 175
Flow Scale = 111%

Table S.15 - CAPACITY AND LEVEL OF SERVICE

Mov No.	Mov Typ	Green Ratio 1st grn	Time (g/C) 2nd grn	Total Flow (veh /h)	Total Cap. (veh /h)	Deg. of Satn (v/c)	Aver. Delay (sec)	LOS
West: PR-54 West								
12	L	0.131*		221	221<	1.000	95.0	F
11	LT	0.331		1063E	1489	0.714	59.0	E
13	R (Un1)	0.446	0.331	282E	395	0.714	61.2	E
				1566	2105	1.000	64.5	E
South: PR-744 South								
32	LT	0.246*		285	414	0.689	77.0	E
33	R (Und)	0.246	0.509	41	60	0.688	81.9	F
				326	473	0.689	77.6	E
East: PR-54 East								
22	L	0.131		226	228<	0.992	96.6	F
21	T	0.331		1666	1599	1.042*	107.6	F
23	R (Un1)	0.469	0.331*	332	319	1.042*	101.2	F
				2224	2146	1.042	105.5	F
North: PR-744 North								
42	LT	0.223*		239	384	0.622	80.5	F
43	R (Un2)	0.223	0.349	30	48	0.623	87.8	F
				269	432	0.623	81.3	F
ALL VEHICLES:				4385	5157	1.042	87.3	F
INTERSECTION (persons):				5262	5157	1.042	87.3	

Level of Service calculations are based on
average control delay including geometric delay (HCM criteria),
independent of the current delay definition used.
For the criteria, refer to the "Level of Service" topic in the
aaSIDRA Output Guide or the Output section of the on-line help.

< Reduced capacity due to a short lane effect
* Maximum v/c ratio, or critical green periods
E "Excess" flow from the short lane of an adjacent movement added to normal flow

---

Brisa del Mar
Int. PR-54 & PR-744, Hora PIco AM, A?o 2014 con Proyecto Modificado
Intersection ID: 4

Scaled sensitivity parameter: Maximum Green

Table V.23 - INTERSECTION SUMMARY FOR VARIABLE PARAMETER SCALE

Param Scale (%)	Cycle Time (sec)	Total Veh. Cap.	Intersn Deg. of Satn	Prac. Spare Cap.	Aver. Delay (sec)	Stop Rate	Longest Queue (veh)	Perf. Index	Cost Total $/h
50	96	4426	1.306	-31	126.3	1.27	63.7	430.0	2208.7

55	105	4497	1.282	-30	122.9	1.23	65.1	431.5	2175.3
60	110	4567	1.254	-28	117.0	1.20	64.6	423.9	2106.6
65	117	4665	1.216	-26	110.1	1.15	64.3	415.9	2025.9
70	122	4721	1.196	-25	106.7	1.13	64.4	413.1	1985.6
75	129	4801	1.168	-23	102.4	1.10	64.6	410.3	1937.2
80	134	4847	1.150	-22	99.3	1.07	64.8	407.7	1899.1
85	141	4914	1.127	-20	95.9	1.05	65.3	406.7	1862.4
90	146	4952	1.116	-19	94.4	1.04	66.0	407.6	1845.1
95	152	5030	1.092	-18	90.5	1.01	66.0	404.1	1798.4
100	157	5061	1.082	-17	89.8	1.00	66.9	406.7	1791.7
105	164	5110	1.067	-16	88.6	0.99	68.0	409.8	1778.2
110	169	5137	1.060	-15	88.8	0.98	69.1	414.4	1781.8
115	175	5157	1.042	-14	87.3	0.96	69.7	416.5	1767.3
120	180	5164	1.038	-13	88.1	0.96	71.0	422.6	1779.4

--- End of aaSIDRA Output ---

Int. PR-54 & PR-744, Hora Pico PM, Año 2014, Escenario A

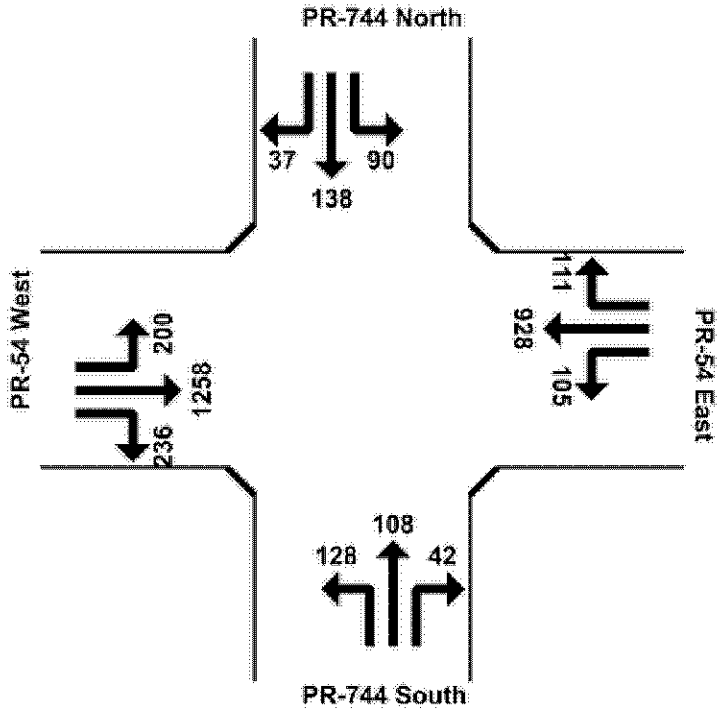

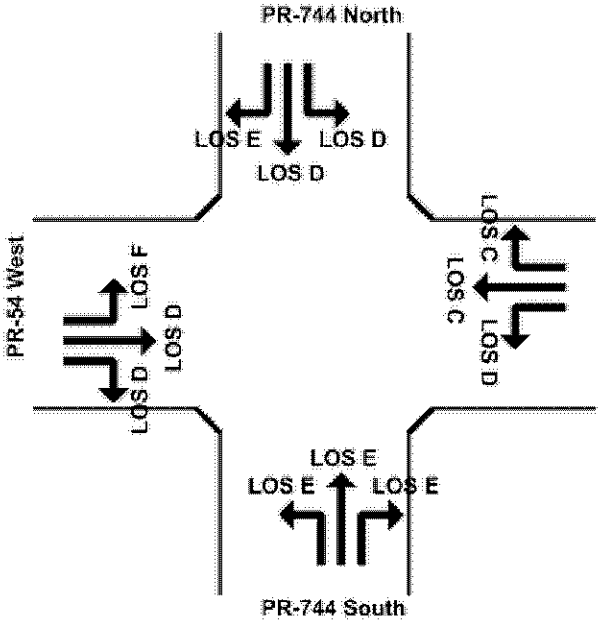

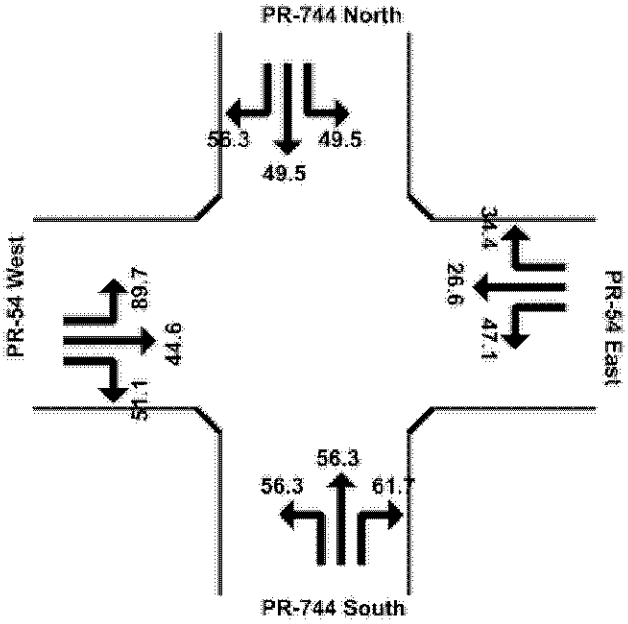

```
                Akcelik & Associates Pty Ltd - aaSIDRA 2.0.0.205
               ----------------------------------------------------
               Servicios Técnicos Integrados
               Francisco J. Reyes        Registered User No. 50310
               Licence Type: Professional, Single Computer

               Time and Date of Analysis    2:14 AM, Apr 26,2009

 Filename: F:\My Documents\Francisco\Consultores\Perez Blair\Guayama\Brisa del
Mar II\SIDRA-09\744PM14P-a.OUT

 Brisa del Mar
 Int. PR-54 & PR-744, Hora PIco PM, A?o 2014 con Proyecto Modificado
 Intersection ID:     4

 aaTraffic SIDRA US Highway Capacity Manual (2000) Version


 RUN INFORMATION
 ---------------
 Parameter sensitivity run: "Optimum" Maximum Green =  50.0 %

 * Basic Parameters:
   Intersection Type: Signalised - Actuated Isolated
   For fully-actuated signal timings, the following specifications will be
ignored:
     Any maximum cycle time specification
     Any user-given cycle time (unless phase times also given)
     User-given cycle and phase times (if variable flow scale run)
     Any variable cycle time specification
     Any green split priority specification
   Driving on the right-hand side of the road
   Input data specified in US units
   Default Values File No. 11
   Peak flow period (for performance): 15 minutes
   Unit time (for volumes): 60 minutes (Total Flow Period)
   Delay definition: Control delay
                     Geometric delay included
   HCM Delay and Queue Models option selected
   Level of Service based on: Delay (HCM method)
   Queue definition: Back of queue, 95th Percentile

 * No. of Main (Timing-Capacity) Iterations =  1
   Comparison of last two iterations:
     Difference in intersection degree of satn =  0.0 %
     Difference in total vehicle capacity      =  0.0 %
     Largest difference in eff. green times =  0 secs
     (max. value for stopping = 0 secs)
 ____________________________________________________________________________

 Brisa del Mar
 Int. PR-54 & PR-744, Hora PIco PM, A?o 2014 con Proyecto Modificado
 Intersection ID:     4



 DEFAULT PARAMETERS
 ------------------
```

Default values for some of the important general parameters:
(Default Values File: DEF11.SDF)

1. Basic saturation flow: 1900 tcu/h

   This value applies mainly to signalised intersections. For roundabouts and sign-controlled intersections, it is used for determining capacity of priority and continuous movements.

2. Through car equivalents for signalised intersections

	L E F T		THROUGH		R I G H T	
	LV	HV	LV	HV	LV	HV
Normal	1.053	2.000	1.000	2.000	1.176	2.000
Restricted	1.303	2.500			1.426	2.500

3. Opposed turn parameters (Signalised intersection)

	Crit. Gap	Fol.up Hdway	Deps at End	% Exit Flow Opposing
Left turns :	4.5	2.5	2.0	0
Right turns:	4.0	2.4	2.5	0

4. Cruise speed= 40 mi/h, Approach Distance= 1800 ft

5. Queue space per vehicle in feet
   Light vehicles: 25.0 Heavy vehicles: 45.0

A full list of input data defaults and ranges is given in the Input Guide part of aaSIDRA User Guide.

Brisa del Mar
Int. PR-54 & PR-744, Hora PIco PM, A?o 2014 con Proyecto Modificado
Intersection ID: 4
Actuated Isolated Signals, Cycle Time = 77
Flow Scale = 111%

Table S.0 - TRAFFIC FLOW DATA

Mov No.	Left LV	Left HV	Through LV	Through HV	Right LV	Right HV	Flow Scale	Peak Flow Factor
VEHICLES Demand flows in veh/hour as used by the program								
West: PR-54 West								
12	230	1	0	0	0	0	1.11	0.96
11	0	0	1419	36	0	0	1.11	0.96
13	0	0	0	0	272	1	1.11	0.96
South: PR-744 South								
32	146	2	125	0	0	0	1.11	0.96
33	0	0	0	0	48	2	1.11	0.92
East: PR-54 East								
22	121	0	0	0	0	0	1.11	0.96
21	0	0	1046	27	0	0	1.11	0.96
23	0	0	0	0	126	2	1.11	0.96
North: PR-744 North								

```
        42           104     0    156     3      0     0   1.11   0.96
        43             0     0      0     0     41     4   1.11   0.92
-----------------------------------------------------------------------
Based on unit time =  60 minutes.
Flow Scale and Peak Hour Factor effects included in flow values.
```

```
Brisa del Mar
Int. PR-54 & PR-744, Hora PIco PM, A?o 2014 con Proyecto Modificado
Intersection ID:     4
            Actuated Isolated Signals, Cycle Time =  77
Flow Scale = 111%

Table S.1 - MOVEMENT PHASE AND TIMING PARAMETERS
-------------------------------------------------------------------------------
 Mov     Mov    P H A S E  M A T R I X    Lost Tim  Req.Mov.Time     Eff. Grn
 No.     Typ  First Green   Second Green  --------  ------------     --------
              ------------  ------------  1st  2nd  1st      2nd     1st  2nd
              Fr To Op Pr   Fr To Op Pr   Grn  Grn  Grn      Grn     Grn  Grn
-------------------------------------------------------------------------------
West: PR-54 West
  12 L       *E  F                         3        13.0Max           10
  11 T       *F  C                         3        28.0Max           25
  13 R  (Un1) C  F  R       F  C          12    3   27.0Min  28.0Max  37   25
-------------------------------------------------------------------------------
South: PR-744 South
  32 LT      *D  E                         3        18.0Max           15
  33 R  (Und) D  E          E  D  R        3   25   18.0Max  27.0Min  15   34
-------------------------------------------------------------------------------
East: PR-54 East
  22 L        E  F                         3        13.0Max           10
  21 T        F  C                         3        27.6              25
  23 R  (Un1) C  F  R       F  C          15    3   27.0Min  23.7     34   25
-------------------------------------------------------------------------------
North: PR-744 North
  42 LT      *C  D                         3        18.0Max           15
  43 R  (Un2) C  D          D  C  R        3   21   18.0Max  27.0Min  15   38
-------------------------------------------------------------------------------
  Current Phase Sequence No.: 2
  Input phase sequence: C  D  E  F
  Output phase sequence: C  D  E  F
-------------------------------------------------------------------------------

Movement Types:                            Under heading 'Op':
  Ped  Pedestrian                            L   "Left" turns are opposed
  Dum  Dummy                                 R   "Right" turns are opposed
  Und  Undetected in both green periods      LR  "Left and Right" opposed
  Un1  Undetected in 1st green period        C   "Constant" saturation flow
  Un2  Undetected in 2nd green period
```

```
Brisa del Mar
Int. PR-54 & PR-744, Hora PIco PM, A?o 2014 con Proyecto Modificado
Intersection ID:     4
            Actuated Isolated Signals, Cycle Time =  77
Flow Scale = 111%

Table S.2 - MOVEMENT CAPACITY PARAMETERS
--------------------------------------------------------------------------------
```

Mov No.	Dem Flow (veh /h)	Satn Flow 1st Grn	Satn Flow 2nd Grn	Flow Ratio 1st Grn	Flow Ratio 2nd Grn	Total Cap. (veh /h)	Prac. Deg. Satn xp	Prac. Spare Cap. (%)	Lane Util (%)	Deg. Satn x
West: PR-54 West										
12 L	231	1893		0.122		246	0.90	-4	100	0.940*
11 T	1455	4936		0.295		1603	0.90	-1	100	0.908
13 R	273	86	799	0.193	0.321	301	0.90	-1	100	0.908
South: PR-744 South										
32 LT	273	1645		0.166		320	0.90	6	100	0.852
33 R	50	247	24	0.200	0.027	59	0.90	6	100	0.852
East: PR-54 East										
22 L	121	1900		0.064		247	0.90	84	100	0.490
21 T	1073	5213		0.206		1693	0.90	42	100	0.634
23 R	128	53	550	0.000	0.233	202	0.90	42	100	0.634
North: PR-744 North										
42 LT	263	1663		0.158		324	0.90	11	100	0.812
43 R	45	228	22	0.190	0.076	55	0.90	11	100	0.814

Brisa del Mar
Int. PR-54 & PR-744, Hora PIco PM, A?o 2014 con Proyecto Modificado
Intersection ID: 4
Actuated Isolated Signals, Cycle Time = 77
Flow Scale = 111%

Table S.3 - INTERSECTION PARAMETERS

Crit Mov No.	App. & Turn	Green Period	Phases Fr	Phases To	Adjusted Lost Time	Adjusted Flow Ratio	Required Grn Time Ratio	Required Movement Time
42	N_LT		C	D	18	-	-	18.0Max
32	S_LT		D	E	18	-	-	18.0Max
12	W_L		E	F	13	-	-	13.0Max
11	W_T		F	C	28	-	-	28.0Max
				Total:	77	0.000	0.000	77.0

- Flow ratio not used for cycle time calculations and the adjusted lost time equals the required movement time (=Min or Max as shown in Table S.1)

Cycle Time:

Minimum	Maximum	Practical	Chosen
36	NA	78	77

Intersection Level of Service	=	D
Worst movement Level of Service	=	F
Average intersection delay (s)	=	44.0
Largest average movement delay (s)	=	89.7
Largest back of queue, 95% (ft)	=	719
Performance Index	=	206.98
Degree of saturation (highest)	=	0.940

```
   Practical Spare Capacity (lowest)         =        -4 %
   Total vehicle capacity, all lanes (veh/h) =      5049
   Total vehicle flow (veh/h)                =      3912
   Total person flow (pers/h)                =      4694
   Total vehicle delay (veh-h/h)             =     47.82
   Total person delay (pers-h/h)             =     57.38
   Total effective vehicle stops (veh/h)     =      3587
   Total effective person stops (pers/h)     =      4304
   Total vehicle travel (veh-mi/h)           =    1671.4
   Total cost ($/h)                          =   1051.10
   Total fuel (ga/h)                         =     105.8
   Total CO2 (kg/h)                          =   1001.85
```

```
Brisa del Mar
Int. PR-54 & PR-744, Hora PIco PM, A?o 2014 con Proyecto Modificado
Intersection ID:     4
            Actuated Isolated Signals, Cycle Time =  77
Flow Scale = 111%

Table S.4 - PHASE INFORMATION
--------------------------------------------------
   Phase    Change   Green  Displayed  Grn+Intgrn
    No.      Time    Start    Green    Secs  Prop.
--------------------------------------------------
    C          0       3        15      18  0.234
    D         18      21        15      18  0.234
    E         36      39        10      13  0.169
    F         49      52        25      28  0.364
--------------------------------------------------
  Current Phase Sequence No.: 2
  Input phase sequence: C  D  E  F
  Output phase sequence: C  D  E  F
```

```
Brisa del Mar
Int. PR-54 & PR-744, Hora PIco PM, A?o 2014 con Proyecto Modificado
Intersection ID:     4
            Actuated Isolated Signals, Cycle Time =  77
Flow Scale = 111%

Table S.14 - SUMMARY OF INPUT AND OUTPUT DATA
-------------------------------------------------------------------------------
 Lane   Demand Flow (veh/h)       Adj.  Eff Grn   Deg   Aver. Longest Shrt
 No.   --------------------  %HV  Basic  (secs)   Sat   Delay  Queue  Lane
          L    T    R   Tot       Satf. 1st 2nd    x    (sec)   (ft)  (ft)
-------------------------------------------------------------------------------
 West: PR-54 West
1 L     231             231    0  2000   10      0.940   89.7   361*  300
2 T          575        575    2  2000   25      0.908   45.4   719
3 T          575        575    2  2000   25      0.908   45.4   719
4 TR         304  273   577    1  2000    3  25  0.908   45.9   674
        ---------------------------------------------------------------------
        231 1455  273  1959    2                 0.940   50.8   719
-------------------------------------------------------------------------------
 South: PR-744 South
1 LTR   148  125   50   323    1  2000   15   1  0.852   57.1   415
        ---------------------------------------------------------------------
        148  125   50   323    1                 0.852   57.1   415
```

```
-----------------------------------------------------------------------------
 East: PR-54 East
1 L     121             121    0  2000   10      0.490   47.1   150   300
2 T          402        402    3  2000   25      0.634   27.2   419
3 T          402        402    3  2000   25      0.634   27.2   419
4 TR         270  128   398    2  2000    2  25  0.634   27.8   386
        ---------------------------------------------------------------
        121 1073  128  1322    2                 0.634   29.2   419
-----------------------------------------------------------------------------
 North: PR-744 North
1 LTR   104  159   45   308    2  2000   15   1  0.812   50.4   386
        ---------------------------------------------------------------
        104  159   45   308    2                 0.812   50.4   386
=============================================================================
 ALL VEHICLES          Total   %       Cycle      Max   Aver.   Max
                       Flow   HV       Time        X    Delay  Queue
                       3912    2         77      0.940   44.0   719
=============================================================================
Total flow period = 60 minutes.  Peak flow period = 15 minutes.

Queue values in this table are 95% back of queue (feet).

Note: Basic Saturation Flows (in through car units) have been adjusted for
      grade, lane widths, parking manoeuvres and bus stops.

  *  Queue length exceeds short lane length due to specification of a
     percentile queue in the aaSIDRA Configuration File. For calculation
     of this statistic, you may specify the lane with full length.
```

```
Brisa del Mar
Int. PR-54 & PR-744, Hora PIco PM, A?o 2014 con Proyecto Modificado
Intersection ID:     4
            Actuated Isolated Signals, Cycle Time =  77
Flow Scale = 111%

Table S.15 - CAPACITY AND LEVEL OF SERVICE
-------------------------------------------------------------
 Mov     Mov    Green Time  Total  Total    Deg.   Aver.   LOS
 No.     Typ    Ratio (g/C) Flow    Cap.     of    Delay
               ------------ (veh   (veh     Satn
                1st   2nd     /h)    /h)     (v/c)  (sec)
                grn   grn
-------------------------------------------------------------
West: PR-54 West
  12 L        0.130*          231    246   0.940*   89.7    F
  11 T        0.325*         1455   1603   0.908    44.6    D
  13 R  (Un1) 0.481  0.325    273    301   0.908    51.1    D
              ----------------------------------------------
                             1959   2149   0.940    50.8    D
-------------------------------------------------------------
South: PR-744 South
  32 LT       0.195*          273    320   0.852    56.3    E
  33 R  (Und) 0.195  0.442     50     59   0.852    61.7    E
              ----------------------------------------------
                              323    379   0.852    57.1    E
-------------------------------------------------------------
East: PR-54 East
  22 L        0.130           121    247   0.490    47.1    D
```

```
  21 T        0.325          1073   1693   0.634    26.6    C
  23 R  (Un1) 0.442  0.325    128    202   0.634    34.4    C
              ----------------------------------------------
                             1322   2141   0.634    29.2    C
-------------------------------------------------------------
North: PR-744 North
  42 LT       0.195*          263    324   0.812    49.5    D
  43 R  (Un2) 0.195  0.494     45     55   0.814    56.3    E
              ----------------------------------------------
                              308    379   0.814    50.5    D
-------------------------------------------------------------
  ALL VEHICLES:              3912   5049   0.940    44.0    D
-------------------------------------------------------------
  INTERSECTION (persons):    4694   5049   0.940    44.0
-------------------------------------------------------------
     Level of Service calculations are based on
     average control delay including geometric delay (HCM criteria),
     independent of the current delay definition used.
     For the criteria, refer to the "Level of Service" topic in the
     aaSIDRA Output Guide or the Output section of the on-line help.
  *  Maximum v/c ratio, or critical green periods
```

Brisa del Mar
Int. PR-54 & PR-744, Hora PIco PM, A?o 2014 con Proyecto Modificado
Intersection ID: 4

Scaled sensitivity parameter: Maximum Green

Table V.23 - INTERSECTION SUMMARY FOR VARIABLE PARAMETER SCALE

Param Scale (%)	Cycle Time (sec)	Total Veh. Cap.	Intersn Deg. of Satn	Prac. Spare Cap.	Aver. Delay (sec)	Stop Rate	Longest Queue (veh)	Perf. Index	Cost Total $/h
50	77	5049	0.940	-4	44.0	0.92	28.2	207.0	1051.1
55	85	5112	0.943	-5	45.5	0.91	30.0	216.2	1070.9
60	90	5167	0.915	-2	46.0	0.90	31.0	221.0	1078.4
65	98	5213	0.920	-2	48.0	0.89	32.8	230.9	1103.0
70	103	5256	0.898	0	48.8	0.88	33.8	236.3	1113.5
75	111	5289	0.903	0	51.0	0.87	35.7	246.7	1140.9
80	116	5324	0.885	2	52.0	0.87	36.7	252.4	1153.6
85	124	5350	0.890	1	54.3	0.86	38.6	262.9	1182.3
90	129	5379	0.875	3	55.4	0.86	39.6	268.8	1195.6
95	137	5399	0.880	2	57.8	0.85	41.4	279.5	1224.6
100	141	5381	0.860	5	59.4	0.86	42.7	286.2	1246.5
105	148	5358	0.867	4	62.2	0.86	44.8	297.5	1281.3
110	152	5342	0.873	3	63.9	0.86	46.0	304.1	1302.6
115	159	5278	0.920	-2	66.6	0.86	48.1	315.0	1337.4
120	163	5246	0.936	-4	68.4	0.86	49.3	321.8	1359.4

--- End of aaSIDRA Output ---

ANEJO 2

ANALISIS DEL TRANSITO 2014

ESCENARIO B

Int. PR-54 & Ave. Marcelino Blondet, Hora Pico AM, 2014, Escenario B

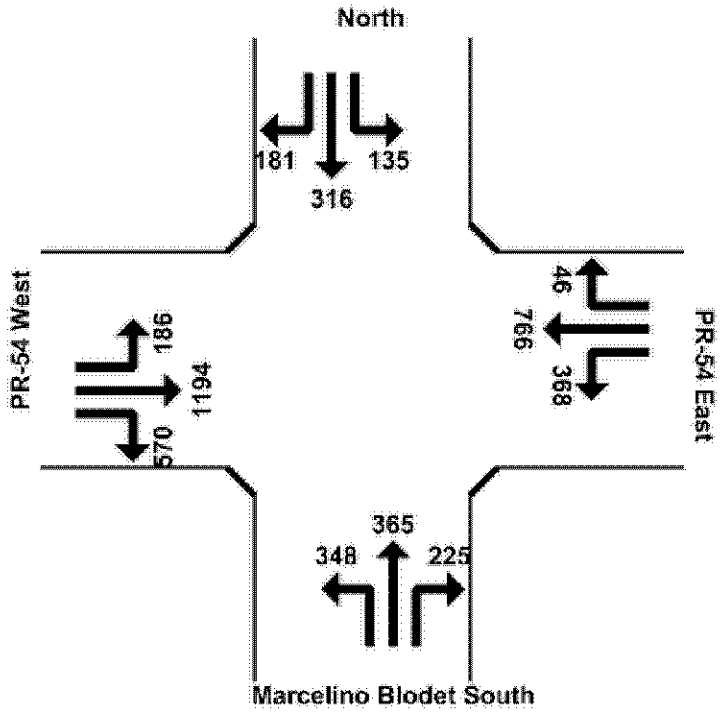

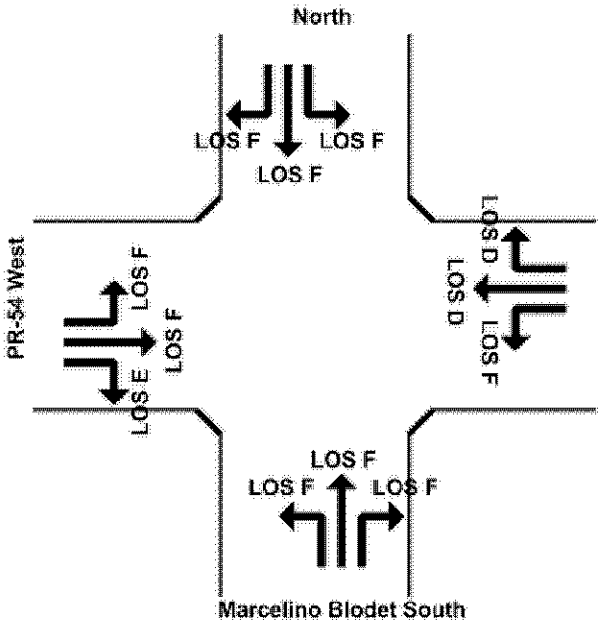

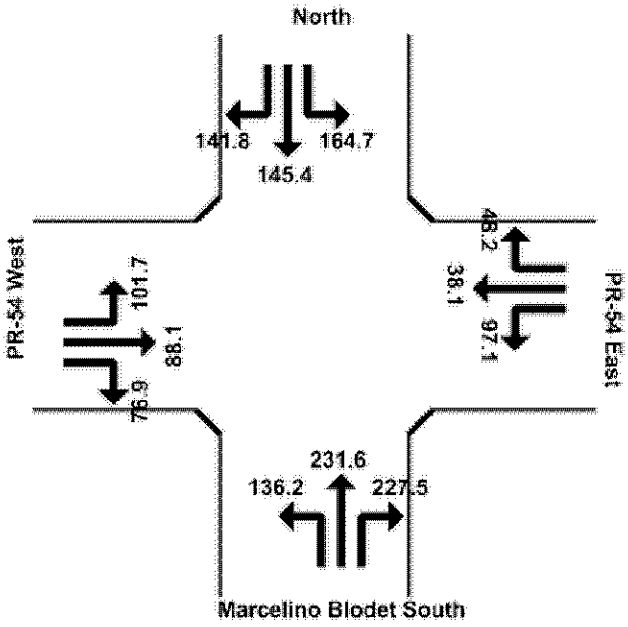

```
                 Akcelik & Associates Pty Ltd - aaSIDRA 2.0.0.205
                ----------------------------------------------------
                Servicios Técnicos Integrados
                Francisco J. Reyes        Registered User No. 50310
                Licence Type: Professional, Single Computer

                Time and Date of Analysis   12:46 AM, Apr 27,2009

 Filename: F:\My Documents\Francisco\Consultores\Perez Blair\Guayama\Brisa del Mar
II\SIDRA-09\HOPAM14P-b.OUT

 Brisa del Mar
 Int. PR-54 & Ave. Marcelino Blondet, Hora PIco AM, 2014 Proyecto Modificado
 Intersection ID:     4

 aaTraffic SIDRA US Highway Capacity Manual (2000) Version


 RUN INFORMATION
 ---------------
 Parameter sensitivity run: "Optimum" Maximum Green =  55.0 %

 * Basic Parameters:
   Intersection Type: Signalised - Actuated Isolated
   For fully-actuated signal timings, the following specifications will be ignored:
     Any maximum cycle time specification
     Any user-given cycle time (unless phase times also given)
     User-given cycle and phase times (if variable flow scale run)
     Any variable cycle time specification
     Any green split priority specification
   Driving on the right-hand side of the road
   Input data specified in US units
   Default Values File No. 11
   Peak flow period (for performance): 15 minutes
   Unit time (for volumes): 60 minutes (Total Flow Period)
   Delay definition: Control delay
                     Geometric delay included
   HCM Delay and Queue Models option selected
   Level of Service based on: Delay (HCM method)
   Queue definition: Back of queue, 95th Percentile

 * No. of Main (Timing-Capacity) Iterations =  1
   Comparison of last two iterations:
     Difference in intersection degree of satn =  0.0 %
     Difference in total vehicle capacity      =  0.0 %
     Largest difference in eff. green times =  0 secs
     (max. value for stopping = 0 secs)
```

```
 Brisa del Mar
 Int. PR-54 & Ave. Marcelino Blondet, Hora PIco AM, 2014 Proyecto Modificado
 Intersection ID:     4



 DEFAULT PARAMETERS
 ------------------
```

Default values for some of the important general parameters:
(Default Values File: DEF11.SDF)

1. Basic saturation flow: 1900 tcu/h

   This value applies mainly to signalised intersections. For roundabouts and sign-controlled intersections, it is used for determining capacity of priority and continuous movements.

2. Through car equivalents for signalised intersections

	L E F T		THROUGH		R I G H T	
	LV	HV	LV	HV	LV	HV
Normal	1.053	2.000	1.000	2.000	1.176	2.000
Restricted	1.303	2.500			1.426	2.500

3. Opposed turn parameters (Signalised intersection)

	Crit. Gap	Fol.up Hdway	Deps at End	% Exit Flow Opposing
Left turns :	4.5	2.5	2.0	0
Right turns:	4.0	2.4	2.5	0

4. Cruise speed= 40 mi/h, Approach Distance= 1800 ft

5. Queue space per vehicle in feet
   Light vehicles: 25.0 Heavy vehicles: 45.0

A full list of input data defaults and ranges is given in the Input Guide part of aaSIDRA User Guide.

Brisa del Mar
Int. PR-54 & Ave. Marcelino Blondet, Hora PIco AM, 2014 Proyecto Modificado
Intersection ID: 4
Actuated Isolated Signals, Cycle Time = 83
Flow Scale = 111%

Table S.0 - TRAFFIC FLOW DATA

Mov No.	Left LV	Left HV	Through LV	Through HV	Right LV	Right HV	Flow Scale	Peak Flow Factor
VEHICLES Demand flows in veh/hour as used by the program								
West: PR-54 West								
12	240	3	0	0	0	0	1.11	0.85
11	0	0	1546	13	0	0	1.11	0.85
13	0	0	0	0	734	10	1.11	0.85
South: Marcelino Blodet South								
32	452	3	0	0	0	0	1.11	0.85
31	0	0	466	10	0	0	1.11	0.85
33	0	0	0	0	287	7	1.11	0.85
East: PR-54 East								
22	478	3	0	0	0	0	1.11	0.85
21	0	0	947	54	0	0	1.11	0.85
23	0	0	0	0	60	0	1.11	0.85
North: North								

```
        42           175     1      0     0      0     0   1.11   0.85
        41             0     0    411     1      0     0   1.11   0.85
        43             0     0      0     0    229     8   1.11   0.85
-----------------------------------------------------------------------
Based on unit time =  60 minutes.
Flow Scale and Peak Hour Factor effects included in flow values.
```

```
Brisa del Mar
Int. PR-54 & Ave. Marcelino Blondet, Hora PIco AM, 2014 Proyecto Modificado
Intersection ID:     4
            Actuated Isolated Signals, Cycle Time =  83
Flow Scale = 111%

Table S.1 - MOVEMENT PHASE AND TIMING PARAMETERS
-------------------------------------------------------------------------------
 Mov     Mov    P H A S E  M A T R I X    Lost Tim  Req.Mov.Time     Eff. Grn
 No.     Typ  First Green   Second Green  --------  ------------     --------
              ------------  ------------  1st  2nd  1st      2nd     1st  2nd
              Fr To Op Pr   Fr To Op Pr   Grn  Grn  Grn      Grn     Grn  Grn
-------------------------------------------------------------------------------
West: PR-54 West
  12 L       *C  D                         4        15.0Max           11
  11 T        D  A                         4        32.0Max           28
  13 R  (Un1) A  D  R      *D  A          20    4   30.0Min  32.0Max  31   28
-------------------------------------------------------------------------------
South: Marcelino Blodet South
  32 L        A  B                         4        18.0Max           14
  31 T        A  B                         4        18.0Max           14
  33 R  (Un2)*A  B          B  A  R        4   36   18.0Max  30.0Min  14   29
-------------------------------------------------------------------------------
East: PR-54 East
  22 L        C  D                         4        15.0Max           11
  21 T        D  A                         4        32.0Max           28
  23 R  (Un1) A  D  R       D  A          20    4   30.0Min  30.2     31   28
-------------------------------------------------------------------------------
North:  North
  42 L        B  C                         4        18.0Max           14
  41 T       *B  C                         4        18.0Max           14
  43 R  (Un2) B  C          C  B  R        4   35   18.0Max  30.0Min  14   30
-------------------------------------------------------------------------------
  Current Phase Sequence No.: 1
  Input phase sequence: A  B  C  D
  Output phase sequence: A  B  C  D
-------------------------------------------------------------------------------

Movement Types:                            Under heading 'Op':
  Ped  Pedestrian                            L   "Left" turns are opposed
  Dum  Dummy                                 R   "Right" turns are opposed
  Und  Undetected in both green periods      LR  "Left and Right" opposed
  Un1  Undetected in 1st green period        C   "Constant" saturation flow
  Un2  Undetected in 2nd green period
```

```
Brisa del Mar
Int. PR-54 & Ave. Marcelino Blondet, Hora PIco AM, 2014 Proyecto Modificado
Intersection ID:     4
            Actuated Isolated Signals, Cycle Time =  83
Flow Scale = 111%
```

Table S.2 - MOVEMENT CAPACITY PARAMETERS

Mov No.	Dem Flow (veh /h)	Satn Flow 1st Grn	Satn Flow 2nd Grn	Flow Ratio 1st Grn	Flow Ratio 2nd Grn	Total Cap. (veh /h)	Prac. Deg. Satn xp	Prac. Spare Cap. (%)	Lane Util (%)	Deg. Satn x
West: PR-54 West										
12 L	243	1879		0.129		249	0.90	-8	100	0.976
11 T	1559	4278		0.364		1443	0.90	-17	100	1.080
13 R	744	550	1432	0.163	0.457	689	0.90	-17	100	1.081
South: Marcelino Blodet South										
32 L	455	1914<		0.238		323	0.90	-36	71	1.409
31 T	476	2002		0.238		338	0.90	-36	100	1.410*
33 R	294	912	157	0.322	0.000	209	0.90	-36	100	1.409
East: PR-54 East										
22 L	481	3779		0.127		501	0.90	-6	100	0.960
21 T	1001	3580		0.280		1208	0.90	9	100	0.829
23 R	60	19	193	0.000	0.311	72	0.90	8	100	0.831
North: North										
42 L	176	869		0.203		147	0.90	-25	100	1.201
41 T	412	2035		0.202		343	0.90	-25	100	1.200
43 R	237	876	137	0.271	0.000	197	0.90	-25	100	1.201

< Reduced saturation flow due to a short lane effect

Brisa del Mar
Int. PR-54 & Ave. Marcelino Blondet, Hora PIco AM, 2014 Proyecto Modificado
Intersection ID: 4
Actuated Isolated Signals, Cycle Time = 83
Flow Scale = 111%

Table S.3 - INTERSECTION PARAMETERS

Crit Mov No.	App. & Turn	Green Period	Phases Fr	Phases To	Adjusted Lost Time	Adjusted Flow Ratio	Required Grn Time Ratio	Required Movement Time
33	S_R	1st	A	B	18	-	-	18.0Max
41	N_T		B	C	18	-	-	18.0Max
12	W_L		C	D	15	-	-	15.0Max
13	W_R	2nd	D	A	32	-	-	32.0Max
				Total:	83	0.000	0.000	83.0

- Flow ratio not used for cycle time calculations and the adjusted lost time equals the required movement time (=Min or Max as shown in Table S.1)

Cycle Time:

Minimum	Maximum	Practical	Chosen
40	NA	84	83

Intersection Level of Service = F

```
   Worst movement Level of Service           =         F
   Average intersection delay (s)            =     108.9
   Largest average movement delay (s)        =     231.6
   Largest back of queue, 95% (ft)           =      1209
   Performance Index                         =    527.25
   Degree of saturation (highest)            =     1.410
   Practical Spare Capacity (lowest)         =       -36 %
   Total vehicle capacity, all lanes (veh/h) =      5793
   Total vehicle flow (veh/h)                =      6138
   Total person flow (pers/h)                =      7366
   Total vehicle delay (veh-h/h)             =    185.72
   Total person delay (pers-h/h)             =    222.86
   Total effective vehicle stops (veh/h)     =      7676
   Total effective person stops (pers/h)     =      9211
   Total vehicle travel (veh-mi/h)           =    2589.0
   Total cost ($/h)                          =   2721.66
   Total fuel (ga/h)                         =     211.2
   Total CO2 (kg/h)                          =   2000.41
```

```
Brisa del Mar
Int. PR-54 & Ave. Marcelino Blondet, Hora PIco AM, 2014 Proyecto Modificado
Intersection ID:     4
            Actuated Isolated Signals, Cycle Time =  83
Flow Scale = 111%

Table S.4 - PHASE INFORMATION
--------------------------------------------------
   Phase    Change   Green  Displayed  Grn+Intgrn
    No.      Time    Start    Green    Secs  Prop.
--------------------------------------------------
    A          0       4        14      18  0.217
    B         18      22        14      18  0.217
    C         36      40        11      15  0.181
    D         51      55        28      32  0.386
--------------------------------------------------
  Current Phase Sequence No.: 1
  Input phase sequence: A  B  C  D
  Output phase sequence: A  B  C  D
```

```
Brisa del Mar
Int. PR-54 & Ave. Marcelino Blondet, Hora PIco AM, 2014 Proyecto Modificado
Intersection ID:     4
            Actuated Isolated Signals, Cycle Time =  83
Flow Scale = 111%

Table S.14 - SUMMARY OF INPUT AND OUTPUT DATA
-------------------------------------------------------------------------------
 Lane   Demand Flow (veh/h)       Adj.  Eff Grn   Deg   Aver. Longest Shrt
 No.   --------------------  %HV  Basic  (secs)   Sat   Delay  Queue  Lane
          L    T    R   Tot       Satf. 1st 2nd    x    (sec)   (ft)  (ft)
-------------------------------------------------------------------------------
 West: PR-54 West
1 L     243            243    1  2000   11      0.976  101.7   421*  300
2 T          723        723    1  2000   28      1.080   89.8  1188
3 T          723        723    1  2000   28      1.080   89.8  1188
4 TR         113  744   857    1  2000   16  28  1.080   75.6  1044
        ---------------------------------------------------------------
```

```
        243 1559  744  2546    1                 1.080   86.1  1188
-------------------------------------------------------------------------
 South: Marcelino Blodet South
1 L     256             256    1  2000   14      1.000   47.4r  307*  160
2 LT    199  259        458    1  2000   14      1.409  246.1  1209
3 TR         217  294   511    2  2000   14   5  1.409  223.6  1122
        ----------------------------------------------------------------
        455  476  294  1225    2                 1.409  195.2  1209
-------------------------------------------------------------------------
 East: PR-54 East
1 L     241             241    1  2000   11      0.960   97.1   406*  300
2 L     241             241    1  2000   11      0.960   97.1   406   500
3 T          531        531    5  2000   28      0.829   37.7   664
4 TR         470   60   530    5  2000    1  28  0.829   39.6   652
        ----------------------------------------------------------------
        481 1001   60  1542    4                 0.960   56.9   664
-------------------------------------------------------------------------
 North:  North
1 LT    176  218        394    0  2000   14      1.200  160.3   855
2 TR         194  237   431    2  2000   14   5  1.200  137.7   742
        ----------------------------------------------------------------
        176  412  237   825    1                 1.200  148.5   855
=========================================================================
 ALL VEHICLES          Total   %       Cycle      Max   Aver.   Max
                       Flow   HV       Time        X    Delay  Queue
                       6138    2         83      1.410  108.9  1209
=========================================================================
Total flow period = 60 minutes.  Peak flow period = 15 minutes.

Queue values in this table are 95% back of queue (feet).

Note: Basic Saturation Flows (in through car units) have been adjusted for
      grade, lane widths, parking manoeuvres and bus stops.

  *  Queue length exceeds short lane length due to specification of a
     percentile queue in the aaSIDRA Configuration File. For calculation
     of this statistic, you may specify the lane with full length.

  r  Delay, stops and queue length for this lane have been cut down to fit in
     the queuing space.  The amount cut may not be accounted for fully in the
     adjacent lane performance statistics.  You may wish to change the short
     lane to a full lane to investigate the extent of this effect.
```

```
Brisa del Mar
Int. PR-54 & Ave. Marcelino Blondet, Hora PIco AM, 2014 Proyecto Modificado
Intersection ID:     4
            Actuated Isolated Signals, Cycle Time =  83
Flow Scale = 111%

Table S.15 - CAPACITY AND LEVEL OF SERVICE
-------------------------------------------------------------
 Mov     Mov    Green Time  Total  Total    Deg.   Aver.   LOS
 No.     Typ    Ratio (g/C) Flow    Cap.     of    Delay
               ------------ (veh   (veh     Satn
                1st   2nd     /h)    /h)    (v/c)  (sec)
                grn   grn
-------------------------------------------------------------
West: PR-54 West
```

```
  12 L        0.133*          243    249   0.976   101.7    F
  11 T        0.337          1559   1443   1.080    88.1    F
  13 R  (Un1) 0.373  0.337*   744    689   1.081    76.9    E
              ----------------------------------------------
                             2546   2381   1.081    86.1    F
-------------------------------------------------------------
South: Marcelino Blodet South
  32 L        0.169           455    323<  1.409   136.2    F
  31 T        0.169           476    338   1.410*  231.6    F
  33 R  (Un2) 0.169* 0.349    294    209   1.409   227.5    F
              ----------------------------------------------
                             1225    869   1.410   195.2    F
-------------------------------------------------------------
East: PR-54 East
  22 L        0.133           481    501   0.960    97.1    F
  21 T        0.337          1001   1208   0.829    38.1    D
  23 R  (Un1) 0.373  0.337     60     72   0.831    48.2    D
              ----------------------------------------------
                             1542   1781   0.960    56.9    E
-------------------------------------------------------------
North:  North
  42 L        0.169           176    147   1.201   164.7    F
  41 T        0.169*          412    343   1.200   145.4    F
  43 R  (Un2) 0.169  0.361    237    197   1.201   141.8    F
              ----------------------------------------------
                              825    687   1.201   148.5    F
-------------------------------------------------------------
  ALL VEHICLES:              6138   5793   1.410   108.9    F
-------------------------------------------------------------
  INTERSECTION (persons):    7366   5793   1.410   108.9
-------------------------------------------------------------
     Level of Service calculations are based on
     average control delay including geometric delay (HCM criteria),
     independent of the current delay definition used.
     For the criteria, refer to the "Level of Service" topic in the
     aaSIDRA Output Guide or the Output section of the on-line help.
  <  Reduced capacity due to a short lane effect
  *  Maximum v/c ratio, or critical green periods
```

Brisa del Mar
Int. PR-54 & Ave. Marcelino Blondet, Hora PIco AM, 2014 Proyecto Modificado
Intersection ID: 4

Scaled sensitivity parameter: Maximum Green

Table V.23 - INTERSECTION SUMMARY FOR VARIABLE PARAMETER SCALE

Param Scale (%)	Cycle Time (sec)	Total Veh. Cap.	Intersn Deg. of Satn	Prac. Spare Cap.	Aver. Delay (sec)	Stop Rate	Longest Queue (veh)	Perf. Index	Cost Total $/h
50	77	5689	1.373	-34	110.1	1.29	47.8	525.5	2745.0
55	83	5793	1.410	-36	108.9	1.25	47.8	527.3	2721.7
60	88	5839	1.421	-37	109.1	1.23	50.0	532.8	2723.5
65	94	5919	1.451	-38	109.6	1.20	53.3	540.3	2728.9
70	101	5914	1.415	-36	109.1	1.19	54.2	548.9	2728.3
75	107	5980	1.442	-38	110.2	1.17	57.2	557.8	2741.3
80	112	6005	1.450	-38	111.5	1.16	59.2	567.3	2764.0
85	118	6060	1.472	-39	113.2	1.14	62.0	578.6	2789.8

90	125	6045	1.443	-38	113.4	1.14	63.1	589.2	2801.5
95	131	6092	1.463	-38	115.3	1.12	65.8	601.1	2830.5
100	136	6108	1.470	-39	116.9	1.12	67.6	611.8	2859.1
105	142	6148	1.487	-39	118.7	1.11	70.1	622.8	2886.9
110	149	6129	1.462	-38	118.9	1.10	71.3	633.1	2898.4
115	155	6118	1.479	-39	121.4	1.09	73.7	646.1	2936.9
120	160	6110	1.485	-39	123.1	1.09	75.4	656.8	2967.4

--- End of aaSIDRA Output ---

Int. PR-54 & Ave. Marcelino Blondet, Hora Pico PM, 2014, Escenario B

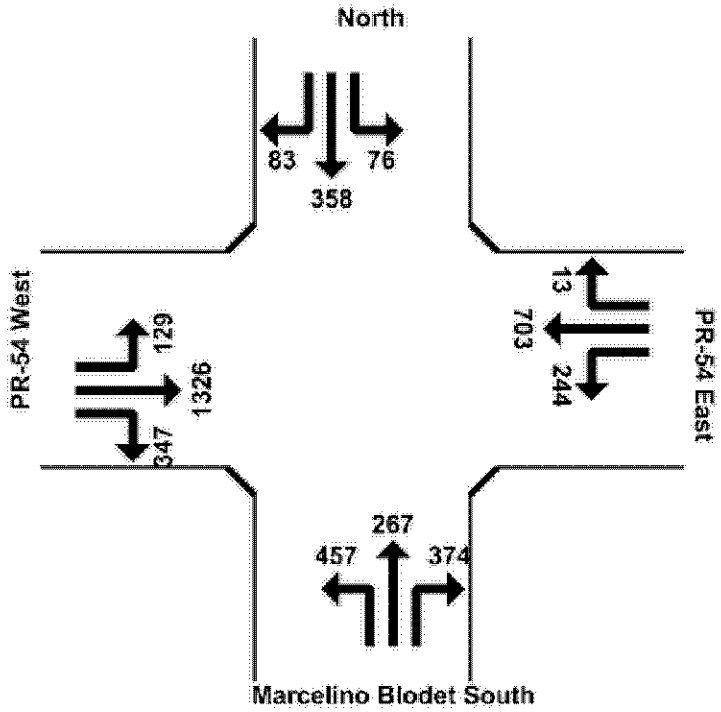

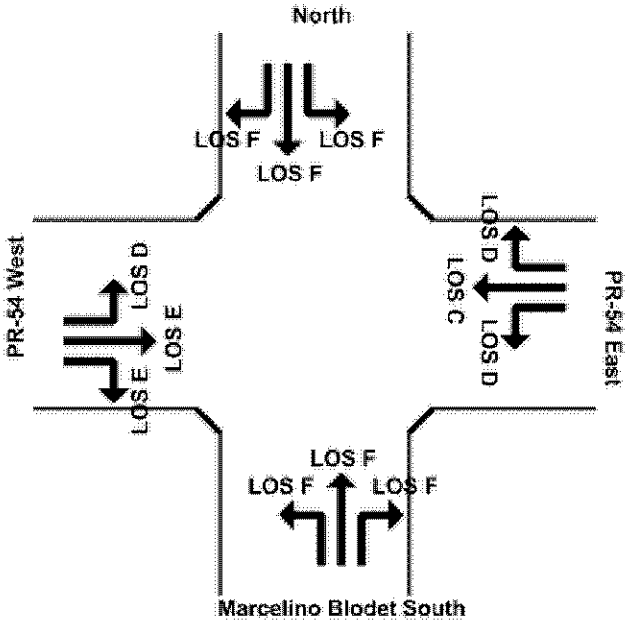

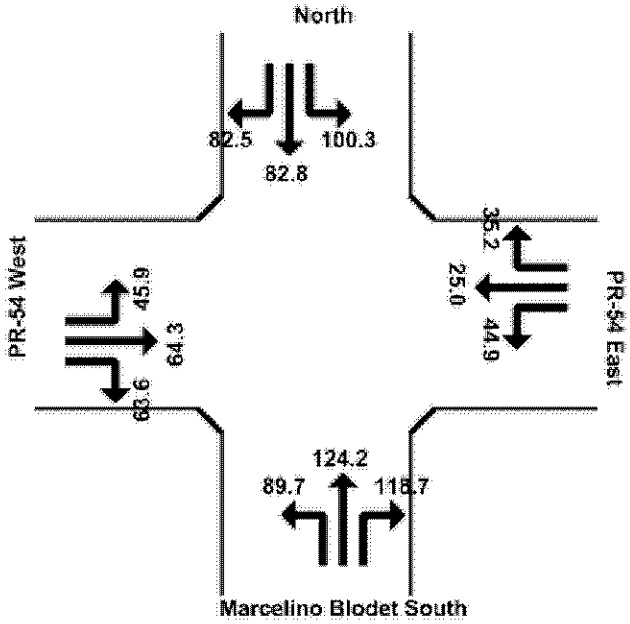

```
                Akcelik & Associates Pty Ltd - aaSIDRA 2.0.0.205
               ----------------------------------------------------
               Servicios Técnicos Integrados
               Francisco J. Reyes        Registered User No. 50310
               Licence Type: Professional, Single Computer

               Time and Date of Analysis   12:50 AM, Apr 27,2009

 Filename: F:\My Documents\Francisco\Consultores\Perez Blair\Guayama\Brisa del Mar
II\SIDRA-09\HOPPM14P-b.OUT

 Brisa del Mar
 Int. PR-54 & Ave. Marcelino Blondet, Hora PIco PM, 2014 con Proyecto Modifi
 Intersection ID:     4

 aaTraffic SIDRA US Highway Capacity Manual (2000) Version


 RUN INFORMATION
 ---------------
 Parameter sensitivity run: "Optimum" Maximum Green =  50.0 %

 * Basic Parameters:
   Intersection Type: Signalised - Actuated Isolated
   For fully-actuated signal timings, the following specifications will be ignored:
     Any maximum cycle time specification
     Any user-given cycle time (unless phase times also given)
     User-given cycle and phase times (if variable flow scale run)
     Any variable cycle time specification
     Any green split priority specification
   Driving on the right-hand side of the road
   Input data specified in US units
   Default Values File No. 11
   Peak flow period (for performance): 15 minutes
   Unit time (for volumes): 60 minutes (Total Flow Period)
   Delay definition: Control delay
                     Geometric delay included
   HCM Delay and Queue Models option selected
   Level of Service based on: Delay (HCM method)
   Queue definition: Back of queue, 95th Percentile

 * No. of Main (Timing-Capacity) Iterations =  1
   Comparison of last two iterations:
     Difference in intersection degree of satn =  0.1 %
     Difference in total vehicle capacity      =  0.0 %
     Largest difference in eff. green times =  0 secs
     (max. value for stopping = 0 secs)
```

```
 Brisa del Mar
 Int. PR-54 & Ave. Marcelino Blondet, Hora PIco PM, 2014 con Proyecto Modifi
 Intersection ID:     4



 DEFAULT PARAMETERS
 ------------------
```

Default values for some of the important general parameters:
(Default Values File: DEF11.SDF)

1. Basic saturation flow: 1900 tcu/h

   This value applies mainly to signalised intersections. For roundabouts and sign-controlled intersections, it is used for determining capacity of priority and continuous movements.

2. Through car equivalents for signalised intersections

	L E F T		THROUGH		R I G H T	
	LV	HV	LV	HV	LV	HV
Normal	1.053	2.000	1.000	2.000	1.176	2.000
Restricted	1.303	2.500			1.426	2.500

3. Opposed turn parameters (Signalised intersection)

	Crit. Gap	Fol.up Hdway	Deps at End	% Exit Flow Opposing
Left turns :	4.5	2.5	2.0	0
Right turns:	4.0	2.4	2.5	0

4. Cruise speed= 40 mi/h, Approach Distance= 1800 ft

5. Queue space per vehicle in feet
   Light vehicles: 25.0 Heavy vehicles: 45.0

A full list of input data defaults and ranges is given in the Input Guide part of aaSIDRA User Guide.

Brisa del Mar
Int. PR-54 & Ave. Marcelino Blondet, Hora PIco PM, 2014 con Proyecto Modifi
Intersection ID: 4
Actuated Isolated Signals, Cycle Time = 73
Flow Scale = 111%

Table S.0 - TRAFFIC FLOW DATA

Mov No.	Left LV	Left HV	Through LV	Through HV	Right LV	Right HV	Flow Scale	Peak Flow Factor
VEHICLES Demand flows in veh/hour as used by the program								
West: PR-54 West								
12	168	0	0	0	0	0	1.11	0.85
11	0	0	1732	0	0	0	1.11	0.85
13	0	0	0	0	453	0	1.11	0.85
South: Marcelino Blodet South								
32	597	0	0	0	0	0	1.11	0.85
31	0	0	349	0	0	0	1.11	0.85
33	0	0	0	0	488	0	1.11	0.85
East: PR-54 East								
22	319	0	0	0	0	0	1.11	0.85
21	0	0	918	0	0	0	1.11	0.85
23	0	0	0	0	17	0	1.11	0.85
North: North								

```
        42            99     0      0     0      0     0   1.11   0.85
        41             0     0    468     0      0     0   1.11   0.85
        43             0     0      0     0    108     0   1.11   0.85
-----------------------------------------------------------------------
Based on unit time =  60 minutes.
Flow Scale and Peak Hour Factor effects included in flow values.
```

```
Brisa del Mar
Int. PR-54 & Ave. Marcelino Blondet, Hora PIco PM, 2014 con Proyecto Modifi
Intersection ID:     4
            Actuated Isolated Signals, Cycle Time =  73
Flow Scale = 111%

Table S.1 - MOVEMENT PHASE AND TIMING PARAMETERS
-------------------------------------------------------------------------------
 Mov     Mov    P H A S E  M A T R I X    Lost Tim  Req.Mov.Time     Eff. Grn
 No.     Typ  First Green   Second Green  --------  ------------     --------
              ------------  ------------  1st  2nd  1st      2nd     1st  2nd
              Fr To Op Pr   Fr To Op Pr   Grn  Grn  Grn      Grn     Grn  Grn
-------------------------------------------------------------------------------
West: PR-54 West
  12 L       *C  D                         2        13.0Max           11
  11 T        D  A                         2        28.0Max           26
  13 R  (Un1) A  D  R      *D  A          15    3   27.0Min  28.0Max  30   25
-------------------------------------------------------------------------------
South: Marcelino Blodet South
  32 L        A  B                         2        18.0Max           16
  31 T        A  B                         2        18.0Max           16
  33 R  (Un2)*A  B          B  A  R        2   29   18.0Max  27.0Min  16   26
-------------------------------------------------------------------------------
East: PR-54 East
  22 L        C  D                         2        13.0Max           11
  21 T        D  A                         2        27.3              26
  23 R  (Un1) A  D  R       D  A          14    3   27.0Min  24.6     31   25
-------------------------------------------------------------------------------
North:  North
  42 L        B  C                         2        14.0Max           12
  41 T       *B  C                         2        14.0Max           12
  43 R  (Un2) B  C          C  B  R        2   28   14.0Max  27.0Min  12   31
-------------------------------------------------------------------------------
  Current Phase Sequence No.: 1
  Input phase sequence: A  B  C  D
  Output phase sequence: A  B  C  D
-------------------------------------------------------------------------------

Movement Types:                            Under heading 'Op':
  Ped  Pedestrian                            L   "Left" turns are opposed
  Dum  Dummy                                 R   "Right" turns are opposed
  Und  Undetected in both green periods      LR  "Left and Right" opposed
  Un1  Undetected in 1st green period        C   "Constant" saturation flow
  Un2  Undetected in 2nd green period
```

```
Brisa del Mar
Int. PR-54 & Ave. Marcelino Blondet, Hora PIco PM, 2014 con Proyecto Modifi
Intersection ID:     4
            Actuated Isolated Signals, Cycle Time =  73
Flow Scale = 111%
```

Table S.2 - MOVEMENT CAPACITY PARAMETERS

Mov No.	Dem Flow (veh /h)	Satn Flow 1st Grn	Satn Flow 2nd Grn	Flow Ratio 1st Grn	Flow Ratio 2nd Grn	Total Cap. (veh /h)	Prac. Deg. Satn xp	Prac. Spare Cap. (%)	Lane Util (%)	Deg. Satn x
West: PR-54 West										
12 L	168	1900		0.088		286	0.90	53	100	0.587
11 T	1732	4756		0.364		1694	0.90	-12	100	1.022
13 R	453	191	1064	0.188	0.392	443	0.90	-12	100	1.023
South: Marcelino Blodet South										
32 L	597	2322<		0.257		509	0.90	-23	85	1.173*
31 T	349	1357		0.257		297	0.90	-23	100	1.173*
33 R	488	1258	394	0.388	0.000	416	0.90	-23	100	1.173*
East: PR-54 East										
22 L	319	3800		0.084		573	0.90	62	100	0.557
21 T	918	3926		0.234		1398	0.90	37	100	0.657
23 R	17	10	64	0.000	0.266	26	0.90	39	100	0.650
North: North										
42 L	99	589		0.168		97	0.90	-12	100	1.022
41 T	468	2786		0.168		458	0.90	-12	100	1.022
43 R	108	511	51	0.211	0.000	106	0.90	-12	100	1.022

< Reduced saturation flow due to a short lane effect

Brisa del Mar
Int. PR-54 & Ave. Marcelino Blondet, Hora PIco PM, 2014 con Proyecto Modifi
Intersection ID: 4
Actuated Isolated Signals, Cycle Time = 73
Flow Scale = 111%

Table S.3 - INTERSECTION PARAMETERS

Crit Mov No.	App. & Turn	Green Period	Phases Fr	Phases To	Adjusted Lost Time	Adjusted Flow Ratio	Required Grn Time Ratio	Required Movement Time
33	S_R	1st	A	B	18	-	-	18.0Max
41	N_T		B	C	14	-	-	14.0Max
12	W_L		C	D	13	-	-	13.0Max
13	W_R	2nd	D	A	28	-	-	28.0Max
				Total:	73	0.000	0.000	73.0

- Flow ratio not used for cycle time calculations and the adjusted lost time equals the required movement time (=Min or Max as shown in Table S.1)

Cycle Time:

Minimum	Maximum	Practical	Chosen
36	NA	74	73

Intersection Level of Service = E

```
   Worst movement Level of Service           =         F
   Average intersection delay (s)            =      69.7
   Largest average movement delay (s)        =     124.2
   Largest back of queue, 95% (ft)           =       994
   Performance Index                         =    373.07
   Degree of saturation (highest)            =     1.173
   Practical Spare Capacity (lowest)         =       -23 %
   Total vehicle capacity, all lanes (veh/h) =      6348
   Total vehicle flow (veh/h)                =      5716
   Total person flow (pers/h)                =      6859
   Total vehicle delay (veh-h/h)             =    110.64
   Total person delay (pers-h/h)             =    132.77
   Total effective vehicle stops (veh/h)     =      6417
   Total effective person stops (pers/h)     =      7701
   Total vehicle travel (veh-mi/h)           =    2428.8
   Total cost ($/h)                          =   1910.09
   Total fuel (ga/h)                         =     165.2
   Total CO2 (kg/h)                          =   1563.17
```

Brisa del Mar
Int. PR-54 & Ave. Marcelino Blondet, Hora PIco PM, 2014 con Proyecto Modifi
Intersection ID: 4
Actuated Isolated Signals, Cycle Time = 73
Flow Scale = 111%

Table S.4 - PHASE INFORMATION

Phase No.	Change Time	Green Start	Displayed Green	Grn+Intgrn Secs	Prop.
A	0	3	15	18	0.247
B	18	21	11	14	0.192
C	32	35	10	13	0.178
D	45	48	25	28	0.384

Current Phase Sequence No.: 1
Input phase sequence: A B C D
Output phase sequence: A B C D

Brisa del Mar
Int. PR-54 & Ave. Marcelino Blondet, Hora PIco PM, 2014 con Proyecto Modifi
Intersection ID: 4
Actuated Isolated Signals, Cycle Time = 73
Flow Scale = 111%

Table S.14 - SUMMARY OF INPUT AND OUTPUT DATA

Lane No.	Demand Flow (veh/h) L	T	R	Tot	%HV	Adj. Basic Satf.	Eff Grn (secs) 1st	2nd	Deg Sat x	Aver. Delay (sec)	Longest Queue (ft)	Shrt Lane (ft)
West: PR-54 West												
1 L	168			168	0	2000	11		0.587	45.9	197	300
2 T		728		728	0	2000	26		1.022	66.3	994	
3 T		728		728	0	2000	26		1.022	66.3	994	
4 TR		275	453	728	0	2000	6	26	1.022	59.9	826	

```
        168 1732  453  2353    0                 1.022   62.9   994
-------------------------------------------------------------------------
 South: Marcelino Blodet South
1 L     305             305    0  2000   16      1.000   39.4r  307*  160
2 LT    292  206        499    0  2000   16      1.173  138.8   941
3 TR         143  488   631    0  2000   16  10  1.173  116.7   926
        ----------------------------------------------------------------
        597  349  488  1434    0                 1.173  108.0   941
-------------------------------------------------------------------------
 East: PR-54 East
1 L     160             160    0  2000   11      0.557   44.9   186   300
2 L     160             160    0  2000   11      0.557   44.9   186   500
3 T          468        468    0  2000   26      0.657   24.6   445
4 TR         450   17   467    0  2000    1  26  0.657   25.8   440
        ----------------------------------------------------------------
        319  918   17  1254    0                 0.657   30.2   445
-------------------------------------------------------------------------
 North:  North
1 LT     99  232        331    0  2000   12      1.022   94.8   528
2 TR         236  108   344    0  2000   12   3  1.022   76.3   408
        ----------------------------------------------------------------
         99  468  108   675    0                 1.022   85.3   528
=========================================================================
 ALL VEHICLES          Total   %       Cycle      Max   Aver.   Max
                       Flow   HV       Time        X    Delay  Queue
                       5716    0         73      1.173   69.7   994
=========================================================================
Total flow period = 60 minutes.  Peak flow period = 15 minutes.

Queue values in this table are 95% back of queue (feet).

Note: Basic Saturation Flows (in through car units) have been adjusted for
      grade, lane widths, parking manoeuvres and bus stops.

  *  Queue length exceeds short lane length due to specification of a
     percentile queue in the aaSIDRA Configuration File. For calculation
     of this statistic, you may specify the lane with full length.

  r  Delay, stops and queue length for this lane have been cut down to fit in
     the queuing space.  The amount cut may not be accounted for fully in the
     adjacent lane performance statistics.  You may wish to change the short
     lane to a full lane to investigate the extent of this effect.
```

```
Brisa del Mar
Int. PR-54 & Ave. Marcelino Blondet, Hora PIco PM, 2014 con Proyecto Modifi
Intersection ID:     4
            Actuated Isolated Signals, Cycle Time =  73
Flow Scale = 111%

Table S.15 - CAPACITY AND LEVEL OF SERVICE
-------------------------------------------------------------
 Mov     Mov    Green Time  Total  Total    Deg.   Aver.   LOS
 No.     Typ    Ratio (g/C) Flow    Cap.     of    Delay
               ------------ (veh   (veh     Satn
                1st   2nd     /h)    /h)    (v/c)  (sec)
                grn   grn
-------------------------------------------------------------
West: PR-54 West
```

```
  12 L        0.151*          168    286   0.587    45.9    D
  11 T        0.356          1732   1694   1.022    64.3    E
  13 R  (Un1) 0.411  0.342*   453    443   1.023    63.6    E
              ------------------------------------------------
                             2353   2423   1.023    62.9    E
-------------------------------------------------------------
South: Marcelino Blodet South
  32 L        0.219           597    509<  1.173*   89.7    F
  31 T        0.219           349    297   1.173*  124.2    F
  33 R  (Un2) 0.219* 0.356    488    416   1.173*  118.7    F
              ------------------------------------------------
                             1434   1222   1.173   108.0    F
-------------------------------------------------------------
East: PR-54 East
  22 L        0.151           319    573   0.557    44.9    D
  21 T        0.356           918   1398   0.657    25.0    C
  23 R  (Un1) 0.425  0.342     17     26   0.650    35.2    D
              ------------------------------------------------
                             1254   1997   0.657    30.2    C
-------------------------------------------------------------
North:  North
  42 L        0.164            99     97   1.022   100.3    F
  41 T        0.164*          468    458   1.022    82.8    F
  43 R  (Un2) 0.164  0.425    108    106   1.022    82.5    F
              ------------------------------------------------
                              675    660   1.022    85.3    F
-------------------------------------------------------------
  ALL VEHICLES:              5716   6348   1.173    69.7    E
-------------------------------------------------------------
  INTERSECTION (persons):    6859   6348   1.173    69.7
-------------------------------------------------------------
     Level of Service calculations are based on
     average control delay including geometric delay (HCM criteria),
     independent of the current delay definition used.
     For the criteria, refer to the "Level of Service" topic in the
     aaSIDRA Output Guide or the Output section of the on-line help.
  <  Reduced capacity due to a short lane effect
  *  Maximum v/c ratio, or critical green periods
```

Brisa del Mar
Int. PR-54 & Ave. Marcelino Blondet, Hora PIco PM, 2014 con Proyecto Modifi
Intersection ID: 4

Scaled sensitivity parameter: Maximum Green

Table V.23 - INTERSECTION SUMMARY FOR VARIABLE PARAMETER SCALE

Param Scale (%)	Cycle Time (sec)	Total Veh. Cap.	Intersn Deg. of Satn	Prac. Spare Cap.	Aver. Delay (sec)	Stop Rate	Longest Queue (veh)	Perf. Index	Cost Total $/h
50	73	6348	1.173	-23	69.7	1.12	39.7	373.1	1910.1
55	80	6380	1.183	-24	71.7	1.11	41.2	386.7	1944.7
60	85	6394	1.215	-26	75.3	1.11	44.6	402.2	2002.3
65	92	6417	1.222	-26	78.6	1.10	47.6	421.1	2068.5
70	97	6426	1.249	-28	82.1	1.10	51.0	436.3	2126.4
75	105	6418	1.269	-29	86.9	1.10	55.1	461.2	2216.7
80	110	6425	1.293	-30	90.4	1.10	58.2	476.0	2273.8
85	117	6440	1.294	-30	92.6	1.09	60.8	490.0	2311.9

90	122	6445	1.315	-32	95.9	1.09	63.8	504.5	2365.4
95	129	6457	1.315	-32	96.5	1.08	66.3	510.8	2366.6
100	134	6461	1.333	-33	101.4	1.08	69.1	532.3	2456.8
105	141	6471	1.333	-32	101.7	1.07	71.6	538.2	2452.8
110	146	6427	1.349	-33	104.8	1.07	74.3	551.7	2503.8
115	153	6416	1.349	-33	106.9	1.06	76.7	565.1	2538.7
120	158	6400	1.364	-34	109.9	1.06	79.3	578.3	2587.0

--- End of aaSIDRA Output -

ANEJO G: Plano del Proyecto

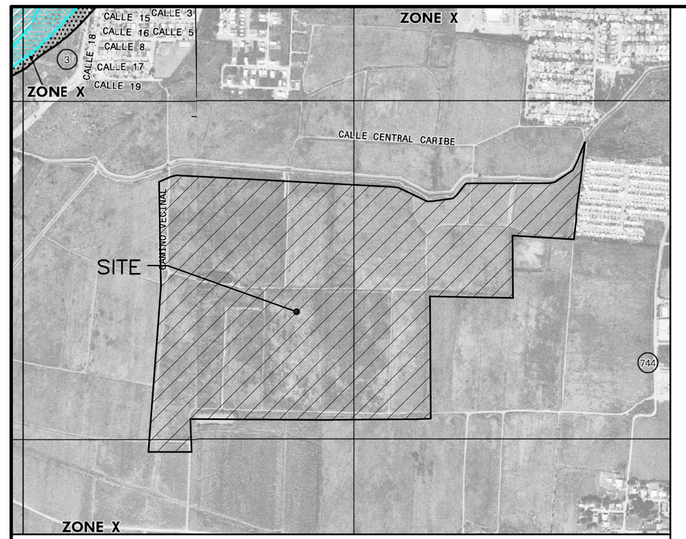

MAP NUMBER: 72000C2110H & 72000C2130H
EFECTIVE DATE: APRIL 19, 2005
SCALE 1:10,000

FLOOD INSURANCE RATE MAP

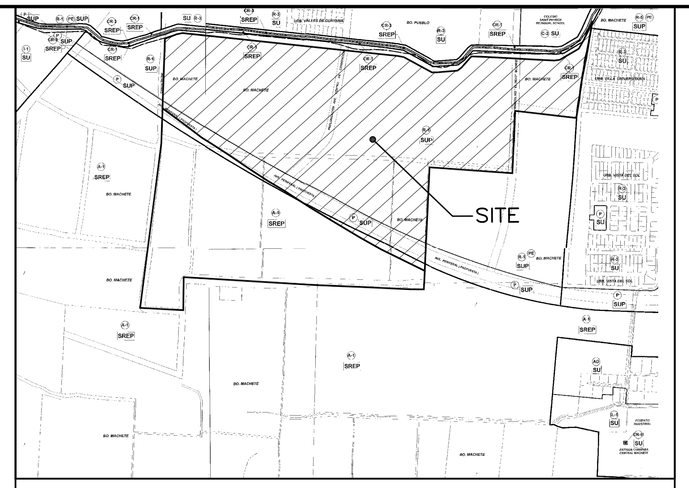

HOJAS NUMERO:
442–001 442–006
441–005 441–010
VIGENCIA: 19 DE MARZO DE 2008
SCALE 1:10,000

MAPA DE CALIFICACION DEL TERRITORIO
MUNICIPIO DE GUAYAMA

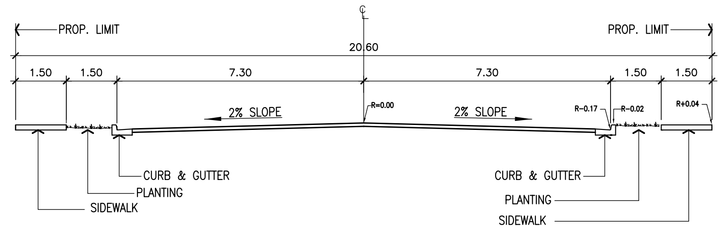

TYPICAL 20.60m STREET SECTION (B–B)
SCALE 1:100

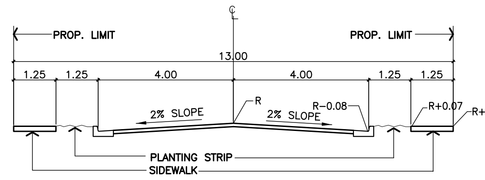

TYPICAL 13.00m STREET SECTION (A–A)
SCALE 1:100

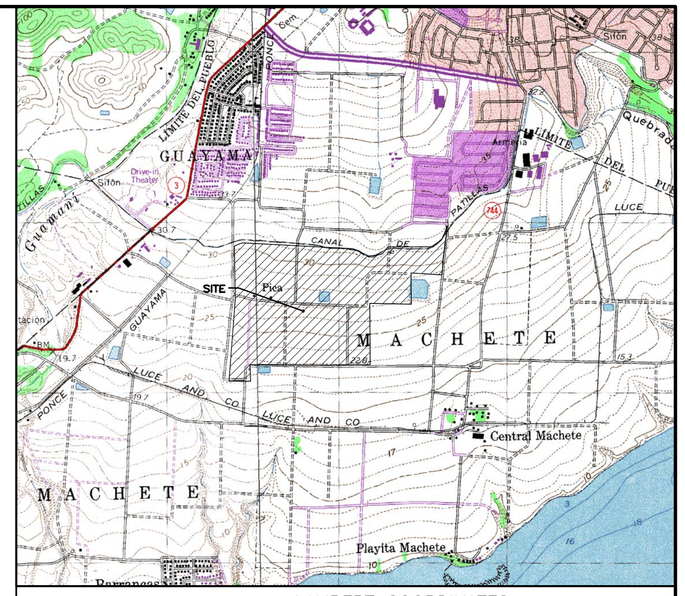

LOCATION MAP
LAMBERT COORDINATES:
X=232,994
Y=214,315
SCALE 1:20,000

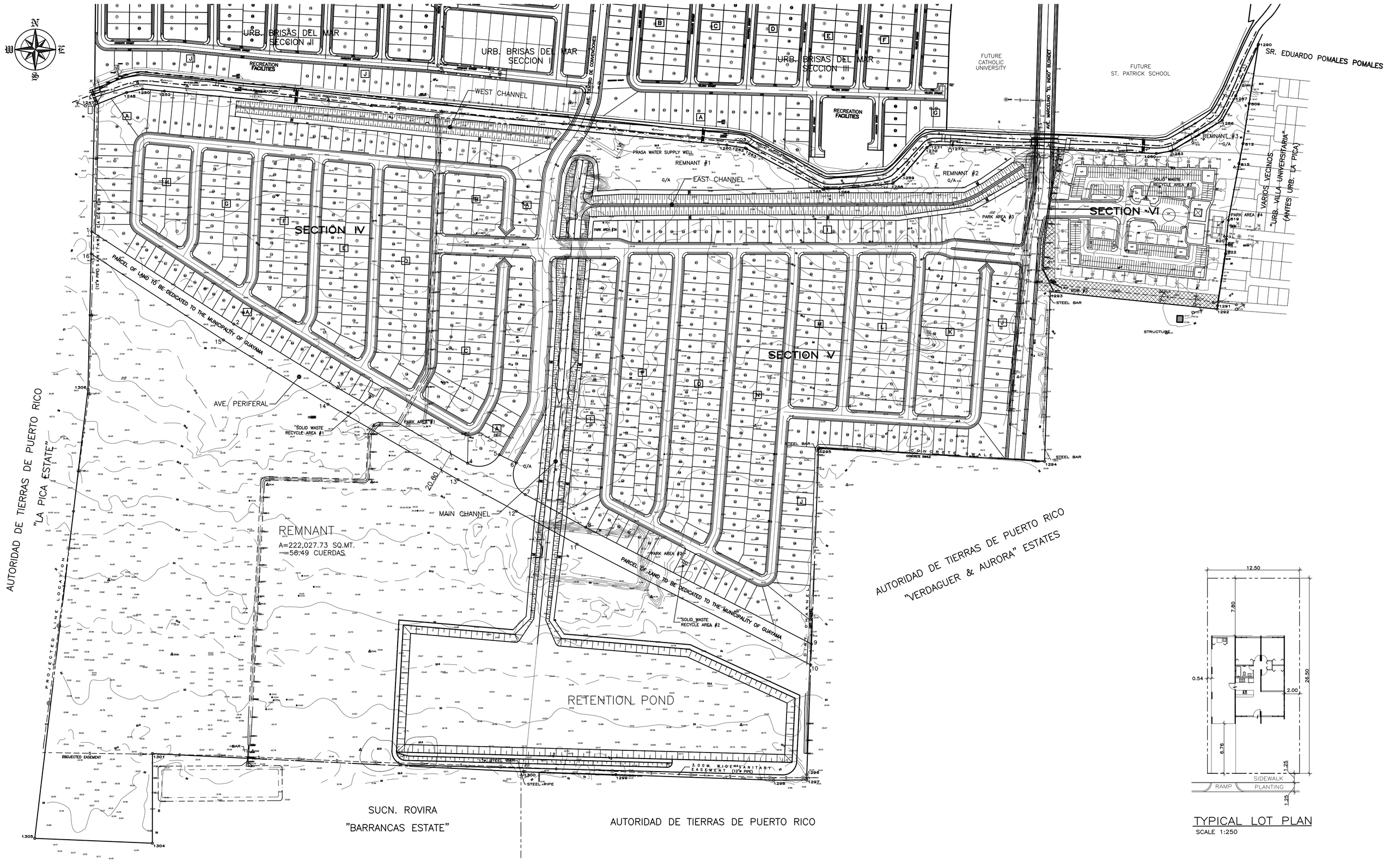

TYPICAL LOT PLAN
SCALE 1:250

SECTION IV – 245 UNITS

LAND USED BREAKDOWN			
USED	AREAS		%
	SQ. METERS	CUERDAS	
STREET & SIDEWALK	47596.29	12.1098	31.05
LOTS	94783.44	24.1155	61.83
PARK AREA #1	2798.67	0.7121	1.83
RECYCLE AREA #1	431.71	0.1098	0.28
CHANNEL AREA	7676.23	1.9530	5.01
TOTAL	153286.34	39.0002	100

DENSITY = 6.282 LOTS/CDA

SECTION V – 326 UNITS

LAND USED BREAKDOWN			
USED	AREAS		%
	SQ. METERS	CUERDAS	
STREET & SIDEWALK	50477.81	12.8429	22.98
LOTS	117450.97	29.8828	53.47
PARK AREAS #2, #3 & 3A	5405.82	1.3754	2.46
RECYCLE AREA #2	361.89	0.0921	0.16
CHANNEL AREA	28679.33	7.2968	13.06
GREEN AREA (G/A)	1696.26	0.4316	0.77
REMNANT #1&#2	15593.23	3.9673	7.10
TOTAL	219665.31	55.8889	100.00

DENSITY = 5.833 LOTS/CDA

SECTION VI – 176 UNITS

LAND USED BREAKDOWN (APROX)			
USED	AREAS		%
	SQ. METERS	CUERDAS	
BUILDING	5216.22	1.3272	13.68
STREET	5127.16	1.3045	13.44
PARK AREA #4	668.90	0.1702	1.75
RECYCLE AREA #3	81.36	0.0207	0.21
PARKING & SIDEWALK	9092.47	2.3134	23.84
GREEN AREAS	10776.32	2.7418	28.26
REMNANT #3	2809.53	0.7148	7.37
RIGHT OF WAY (ROW) #1&#2	4366.54	1.1110	11.45
TOTAL	38139.15	9.7036	100

DENSITY = 18.14 UBV/CDA

TOTAL NUMBER OF UNITS		
SECTION	NUMBER OF UNITS	TYPE OF UNITS
1. SECTION IV	245	RESIDENCES
2. SECTION V	326	RESIDENCES
3. SECTION VI	176	APARTMENTS
TOTAL	747	

FRANCISCO PEREZ BLAIR
INGENIERO LICENCIADO
LIC.#9901
PUERTO RICO

PEREZ — BLAIR
CONSULTING ENGINEERS, P.S.C.
776 GEORGETOWN ST., UNIVERSITY GARDENS, RIO PIEDRAS, P.R. 00927 TEL. (787) 756-7887 / FAX (787) 756-6176

PROJECT:
URB. BRISAS DEL MAR:SECCIONES IV,V,VI
MACHETE WARD GUAYAMA, P.R.

PROJECT No.:	04–100
CAD FILE:	SI–CONSULTA
SCALE:	1:2,000
DATE:	AUG/09
DRAWN BY:	RMV
CHECKED:	FPB

No.	REVISIONS	DATE	No.	REVISIONS	DATE

CONSULTA DE UBICACION
NO. 2006–71–0841–JPU
SHEET TITLE

CU–1
OF