	190.2	58.93	0.513	19.19	0.674	475.6	0.00000
North: Desde PR-53 y PR-3							
41 T	176.1	36.15	0.257	7.43	0.381	440.2	0.00000
43 R	226.8	46.27	0.473	25.06	0.840	567.0	0.00000
	181.8	37.29	0.281	9.42	0.433	454.5	0.00000
INTERSECTION:	202.4	67.06	0.534	15.85	0.613	505.9	0.00000

Centro de Mercadeo - Palmas del Mar * N906CDM2
Interseccion PR-906 y Centro de Mercadeo 2020 Entrada Central - No Semaforo
Intersection No.: 1B
Stop Sign Controlled Intersection

Table S.15 - CAPACITY AND LEVEL OF SERVICE (HCM STYLE)

Mov No.	Mov Typ	Total Flow (veh /h)	Total Cap. (veh /h)	Deg. of Satn (v/c)	Aver. Delay (sec)	LOS
West: Centro de Mercadeo (MAIN)						
12	L	159	60	2.650*	902.3	F
13	R	320	253	1.265	195.2	F
		479	313	2.650	429.9	F
South: Desde Candelero Abajo						
32	L	307	258	1.190	136.9	F
31	T	879	3800	0.231	0.0	A
		1186	4058	1.190	35.4	E
North: Desde PR-53 y PR-3						
41	T	1228	3800	0.323	0.0	A
43	R	154	1222	0.126	11.8	A
		1382	5022	0.323	1.3	A
ALL VEHICLES:		3047	9393	2.650	82.0	F
INTERSECTION:		3047	9393	2.650	82.0	F

Level of Service calculations are based on delay (HCM criteria).
* Maximum v/c ratio, or critical green periods

Centro de Mercadeo - Palmas del Mar * N906CDM2
Interseccion PR-906 y Centro de Mercadeo 2020 Entrada Central - No Semaforo
Intersection No.: 1B
Stop Sign Controlled Intersection

Table D.0 - GEOMETRIC DELAY DATA

From Approach	To Approach	Negn Radius (m)	Negn Speed (km/h)	Negn Distance (m)
West: Centro de Mercadeo (MAIN)				
	South	10	18	16
	North	17	23	27
South: Desde Candelero Abajo				

	West	15	22	24
	North	S	64	23

North: Desde PR-53 y PR-3

	West	10	18	16
	South	S	64	23

Centro de Mercadeo - Palmas del Mar * N906CDM2
Interseccion PR-906 y Centro de Mercadeo 2020 Entrada Central - No Semaforo
Intersection No.: 1B
Stop Sign Controlled Intersection

Table D.1 - LANE DELAYS

Lane No.	Mov No.	Deg. Satn x	Delay (seconds/veh) Analytical Model 1st dm1	2nd dm2	Total dm	Acc. Dec. dn	Queue -ing dq	Ratio dm/ di	Stopd (Idle) di	Geom dg	Overall d
West: Centro de Mercadeo (MAIN)											
1 L	12	2.650	60.0	828.8	888.8	3.0	885.9	1.01	883.8	13.5	902.3
2 R	13	1.266	14.2	167.9	182.1	2.4	179.7	1.10	166.3	13.1	195.2
South: Desde Candelero Abajo											
1 L	32	1.190	21.7	105.5	127.2	5.3	121.9	1.16	109.5	9.7	136.9
2 T	31	0.231	0.0	0.0	0.0	0.0	0.0	0.00	0.0	0.0	0.0
3 T	31	0.231	0.0	0.0	0.0	0.0	0.0	0.00	0.0	0.0	0.0
North: Desde PR-53 y PR-3											
1 T	41	0.323	0.0	0.0	0.0	0.0	0.0	0.00	0.0	0.0	0.0
2 T	41	0.323	0.0	0.0	0.0	0.0	0.0	0.00	0.0	0.0	0.0
?	43	0.126	1.7	0.0	1.7	2.2	0.0	0.00	0.0	10.1	11.8

dn is average stop-start delay for all vehicles queued and unqueued

Centro de Mercadeo - Palmas del Mar * N906CDM2
Interseccion PR-906 y Centro de Mercadeo 2020 Entrada Central - No Semaforo
Intersection No.: 1B
Stop Sign Controlled Intersection

Table D.2 - LANE STOPS

Lane No.	Mov No.	Deg. Satn x	-- Effective Stop Rate -- he1	he2	Geom. hg	Overall h	Prop. Queued pq	Queue Move-up Rate hqm
West: Centro de Mercadeo (MAIN)								
1 L	12	2.650	1.00	0.08	0.00	1.08	1.000	1.32
2 R	13	1.266	1.00	0.53	0.00	1.53	1.000	6.75
South: Desde Candelero Abajo								
1 L	32	1.190	1.00	0.49	0.00	1.49	1.000	6.01
2 T	31	0.231	0.00	0.00	0.00	0.00	0.000	0.00
3 T	31	0.231	0.00	0.00	0.00	0.00	0.000	0.00
North: Desde PR-53 y PR-3								
1	41	0.323	0.00	0.00	0.00	0.00	0.000	0.00
2 T	41	0.323	0.00	0.00	0.00	0.00	0.000	0.00
3 R	43	0.126	0.31	0.00	0.35	0.66	0.491	0.00

hqm is average queue move-up rate for all vehicles queued and unqueued

Interseccion PR-906 y Centro de Mercadeo 2020 Entrada Central - No Semaforo
Intersection No.: 1B
Stop Sign Controlled Intersection

Table D.3 - LANE QUEUES

Lane No.	Mov No.	Deg. Satn x	Ovrfl. Queue No	Average Nb1	Average Nb2	Average Nb	Percentile 90%	Percentile 95%	Percentile 98%	Queue Stor. Ratio
West: Centro de Mercadeo (MAIN)										
1 L	12	2.650	14.2	18.1	15.8	33.8	64.6	84.9	101.8	0.04
2 R	13	1.266	9.8	2.2	11.1	13.3	27.0	34.9	41.6	0.02
South: Desde Candelero Abajo										
1 L	32	1.190	8.2	2.3	10.0	12.2	25.1	32.4	38.5	0.40
2 T	31	0.231	0.0	0.0	0.0	0.0	0.0	0.0	0.0	0.00
3 T	31	0.231	0.0	0.0	0.0	0.0	0.0	0.0	0.0	0.00
North: Desde PR-53 y PR-3										
1 T	41	0.323	0.0	0.0	0.0	0.0	0.0	0.0	0.0	0.00
2 T	41	0.323	0.0	0.0	0.0	0.0	0.0	0.0	0.0	0.00
3 R	43	0.126	0.0	0.3	0.0	0.3	0.8	1.0	1.2	0.01

Values printed in this table are back of queue.

Table D.4 - MOVEMENT SPEEDS (km/h)

Mov No.	App. Speeds Cruise	App. Speeds Negn	Exit Speeds Negn	Exit Speeds Cruise	Queue Move-up 1st Grn	Queue Move-up 2nd Grn	Av. Section Spd Running	Av. Section Spd Overall
West: Centro de Mercadeo (MAIN)								
12	64.0	0.0	23.0	64.0	2.6		51.9	4.4
13	64.0	0.0	18.0	64.0	3.4		45.7	16.3
South: Desde Candelero Abajo								
32	64.0	22.0	22.0	64.0	3.5		31.8	10.6
31	64.0	64.0	64.0	64.0			64.0	64.0
North: Desde PR-53 y PR-3								
41	64.0	64.0	64.0	64.0			64.0	64.0
43	64.0	18.0	18.0	64.0			54.0	54.0

--- End of SIDRA Output ---

TRAFFIC ANALYSIS

GRAPHIC SUMMARY OF TRAFFIC FLOW

DATE _____ DAY _____ WEATHER _____ PERIOD 3PM TO 6PM

MUNICIPALITY Humacao URBAN ZONE ☐ RURAL ☐ SUB-URBAN ☒

INTERSECTION OF PR-906 WITH PR-923 / CENTRO COMERCIAL NORTE

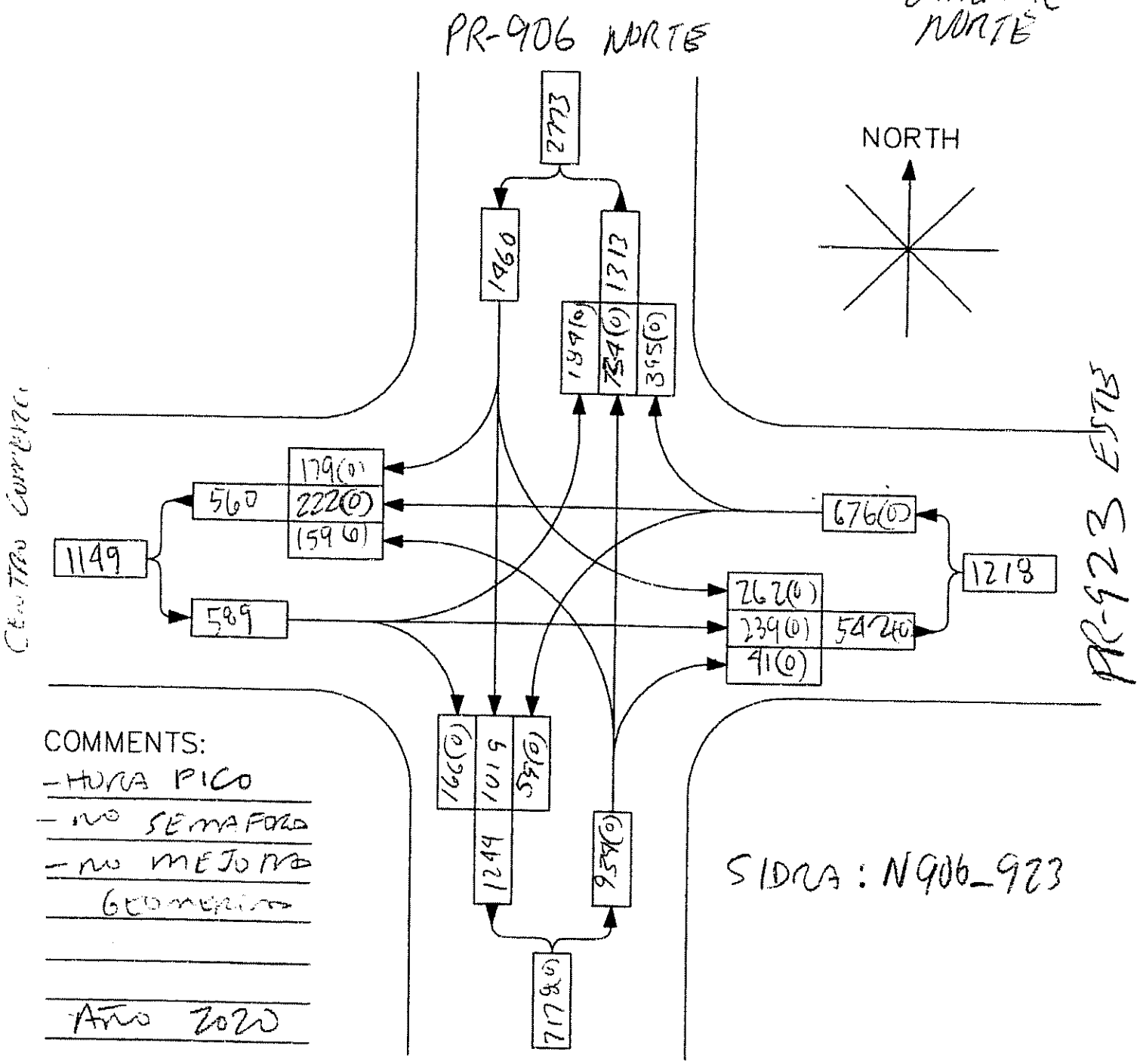

COMMENTS:

- HORA PICO
- NO SEMAFORO
- NO MEJORA GEOMETRICA
- AÑO 2020

SIDRA: N906_923

CMA ARCHITECTS & ENGINEERS
CIVIL Registered User No. M0138
Time and Date of Analysis 16:07:58 12/19/00

Centro de Mercadeo - Palmas del Mar * N906_923
Intersección PR-906 y PR-923 2020 - Entrada Norte - No Semaforo
Intersection No.: 2

SIDRA US Highway Capacity Manual (1994) Version
Stop Sign Controlled Intersection

RUN INFORMATION

* Basic Parameters:
  Intersection Type: Unsignalised - Two-Way Stop Control
  Driving on the right-hand side of the road
  SIDRA US Highway Capacity Manual (1994) Version
  Input data specified in Metric units
  Default Values File No. 11
  Peak flow period (for performance): 15 minutes
  Unit time (for volumes): 60 minutes (Total Flow Period)
  Delay definition: Overall delay,
  Geometric delay included
  Delay formula: Highway Capacity Manual
  Level of Service based on: Delay (HCM)
  Queue definition: Back of queue, 95th_Percentile

Centro de Mercadeo - Palmas del Mar * N906_923
Intersección PR-906 y PR-923 2020 - Entrada Norte - No Semaforo
Intersection No.: 2

PARAMETERS

Default values for some of the important general parameters:
(Default Values File: DEF11.SDF)

1. Basic saturation flow: 1900 tcu/h

   This value applies to signalised intersections and priority and continuous movements at roundabouts and unsignalised intersections. Saturation flows (capacities) for all opposed movements at roundabouts and sign-controlled intersections are estimated from a gap-acceptance based model.

2. Through car equivalents for signalised intersections

	LEFT		THROUGH		RIGHT	
	LV	HV	LV	HV	LV	HV
Normal	1.053	2.000	1.000	2.000	1.176	2.000
Restricted	1.303	2.500			1.426	2.500

3. Opposed turn parameters (Two-Way Stop Control)

	Crit. Gap	Fol.up Hdway	Min. Deps	% Exit Flow Opposing
Left turns :	7.0	3.40	1.0	50
Through :	6.5	3.30	1.0	50
Right turns:	5.5	2.60	1.0	50
Opposed turns from priority road:				
	5.5	2.60	1.0	0

4. Cruise speed= 40 km/h, Approach Distance= 1500 m

5. Queue space per vehicle in metres

Light vehicles: 0.3 Heavy vehicles: 0.4

Centro de Mercadeo - Palmas del Mar * N906_923
Intersecci¢n PR-906 y PR-923 2020 - Entrada Norte - No Semaforo
Intersection No.: 2
Stop Sign Controlled Intersection

Table S.0 - TRAFFIC FLOW DATA (Flows in veh/hour as used by the program)

Mov No.	Left		Through		Right		Flow Scale	Peak Flow Factor
	LV	HV	LV	HV	LV	HV		
West: Centro de Mercadeo								
12	204	6	0	0	0	0	1.00	0.90
11	0	0	266	6	0	0	1.00	0.90
13	0	0	0	0	184	6	1.00	0.90
South: Desde Palmas del Mar								
32	177	3	0	0	0	0	1.00	0.90
31	0	0	816	6	0	0	1.00	0.90
33	0	0	0	0	46	0	1.00	0.90
East: Desde Palmas del Mar								
22	66	1	247	0	0	0	1.00	0.90
23	0	0	0	0	439	4	1.00	0.90
North: Desde PR-906(PR-53,PR-3)								
42	291	22	0	0	0	0	1.00	0.90
41	0	0	1132	4	0	0	1.00	0.90
43	0	0	0	0	199	2	1.00	0.90

B[illegible]d on unit time = 60 minutes.
1 / Scale and Peak Hour Factor effects included in flow values.

Centro de Mercadeo - Palmas del Mar * N906_923
Intersecci¢n PR-906 y PR-923 2020 - Entrada Norte - No Semaforo
Intersection No.: 2
Stop Sign Controlled Intersection

Table S.2 - MOVEMENT CAPACITY PARAMETERS

Mov No.	Arv Flow (veh /h)	Total Opng Flow (veh/h)	%HV	Adjust. Opng Flow (pcu/h)	Total Cap. (veh /h)	Prac. Deg. Satn xp	Prac. Spare Cap. (%)	Lane Util (%)	Deg. Satn x
West: Centro de Mercadeo									
12 L	210	3232+	1.3	3232	38	0.80	-86	100	5.526
11 T	272	2588+	1.5	2588	49	0.80	-86	100	5.551
13 R	190	1227+	0.5	1227	34	0.80	-86	100	5.588*
South: Desde Palmas del Mar									
32 L	180	1337	0.4	1337	457	0.80	103	100	0.394
31 T	822	0			2088	0.80	103	100	0.394
33 R	46	0			117	0.80	103	100	0.393
East: Desde Palmas del Mar									
[illegible] LT	314	DIFF			224	0.80	-43	100	1.402
R	443	843+	1.3	843	316	0.80	-43	100	1.402
North: Desde PR-906(PR-53,PR-3)									
42 L	313	868	0.7	868	705	0.80	80	100	0.444
41 T	1136	0			2560	0.80	80	100	0.444
43 R	201	0			453	0.80	80	100	0.444

DIFF Opposing flow was not printed as there was more than one opposed turn in this movement with differing opposing flows
\+ Percentage of exiting flow included in total opposing flow

Centro de Mercadeo - Palmas del Mar * N906_923
I rsecci¢n PR-906 y PR-923 2020 - Entrada Norte - No Semaforo
I rsection No.: 2
Stop Sign Controlled Intersection

Table S.3 - INTERSECTION PARAMETERS

Degree of Saturation (Highest)	=	5.588
Practical Spare Capacity (Lowest)	=	-86 %
Total Vehicle Flow	=	4127
Total Vehicle Capacity (all lanes)	=	7041

Centro de Mercadeo - Palmas del Mar * N906_923
Intersecci¢n PR-906 y PR-923 2020 - Entrada Norte - No Semaforo
Intersection No.: 2
Stop Sign Controlled Intersection

Table S.5 - MOVEMENT PERFORMANCE

Mov No.		Total Delay (veh-h/h)	Aver. Delay (sec)	Prop. Queued	Eff. Stop Rate	Longest Queue 95% Back (vehs)	(m)	Perf. Index	Aver. Speed (km/h)
West: Centro de Mercadeo									
12	L	130.64	2239.6	1.00	1.03	598.9	386	282.82	0.6
ì	T	169.34	2241.3	1.00	1.13	598.9	386	285.18	0.6
ɔ	R	118.37	2242.8	1.00	1.29	130.5	85	150.36	0.6
South: Desde Palmas del Mar									
32	L	1.61	32.2	0.94	1.03	5.5	3	5.20	22.2
31	T	1.31	5.8	0.16	0.00	5.5	3	6.36	50.5
33	R	0.01	0.6	0.00	0.69	0.0	0	0.42	41.2
East: Desde Palmas del Mar									
22	LT	22.23	254.9	1.00	1.67	76.7	41	60.49	6.0
23	R	27.93	227.0	1.00	2.35	76.7	41	59.07	6.5
North: Desde PR-906(PR-53,PR-3)									
42	L	1.80	20.7	0.85	1.02	11.3	6	8.84	40.3
41	T	3.03	9.6	0.46	0.00	11.3	6	18.02	53.1
43	R	0.14	2.6	0.00	0.69	0.0	0	3.04	50.6

Centro de Mercadeo - Palmas del Mar * N906_923
Intersecci¢n PR-906 y PR-923 2020 - Entrada Norte - No Semaforo
Intersection No.: 2
Stop Sign Controlled Intersection

Table S.6 - INTERSECTION PERFORMANCE

Total F w (h)	Total Delay (veh-h/h)	Aver. Delay (sec)	Prop. Queued	Eff. Stop Rate	Perf. Index	Aver. Speed (km/h)
West: Centro de Mercadeo						
672	418.36	2241.2	1.000	1.14	718.36	0.6
South: Desde Palmas del Mar						

1048	2.93	10.1	0.290	0.21	11.98	40.7
East: Desde Palmas del Mar						
757	50.16	238.5	1.000	2.07	119.56	6.3
North: Desde PR-906(PR-53,PR-3)						
750	4.98	10.9	0.485	0.28	29.91	49.7
INTERSECTION:						
4127	476.42	415.6	0.614	0.73	879.81	4.0

Centro de Mercadeo - Palmas del Mar * N906_923
Intersecci¢n PR-906 y PR-923 2020 - Entrada Norte - No Semaforo
Intersection No.: 2
Stop Sign Controlled Intersection

Table S.7 - LANE PERFORMANCE

Lane No.	Mov No.	Arv Flow (veh /h)	Cap (veh /h)	Deg. Satn x	Aver. Delay (sec)	Eff. Stop Rate	Queue 95% Back (vehs)	Queue 95% Back (m)	Short Lane (m)
West: Centro de Mercadeo									
1 LT	12, 11	336	60	5.600	2239.6	1.03	598.9	386	
2 TR	11, 13	336	60	5.600	2242.8	1.29	130.5	85	
South: Desde Palmas del Mar									
1 L	32	99	251	0.394	32.2	1.03	3.0	2	60
2 LT	32, 31	214	545	0.394	32.2	0.00	5.5	3	
3 TR	31, 33	735	1867	0.394	0.6	0.69	0.0	0	
East: Desde Palmas del Mar									
1 LT	22	84	60	1.401	331.3	1.08	53.9	30	
2 TR	22, 23	673	480	1.401	227.0	2.35	76.7	41	
North: Desde PR-906(PR-53,PR-3)									
1 L	42	229	517	0.444	21.8	1.01	4.4	4	60
2 LT	42, 41	617	1390	0.444	17.6	0.00	11.3	6	
3 TR	41, 43	804	1812	0.444	2.6	0.69	0.0	0	

Centro de Mercadeo - Palmas del Mar * N906_923
Intersecci¢n PR-906 y PR-923 2020 - Entrada Norte - No Semaforo
Intersection No.: 2
Stop Sign Controlled Intersection

Table S.8 - LANE FLOW AND CAPACITY INFORMATION

West: Centro de Mercadeo

Active Lane Use	Mov No.	Arv Flow (veh/h) Lef	Thru	Rig	Tot	Saturation Flow Basic (tcu)	Aver(veh) 1st	2nd	Min Cap (veh /h)	Tot Cap (veh /h)	Deg. Satn x	Lane Util %
*												
***												
* *												

Effective Lane Use	Mov No.	Arv Flow (veh/h) Lef	Thru	Rig	Tot	Saturation Flow Basic (tcu)	Aver (veh) 1st	2nd	Min Cap (veh /h)	Tot Cap (veh /h)	Deg. Satn x	Lane Util %
****** ****	12, 11	210	126	0	336	-	-	-	60	60	5.600	100
****** ****	11, 13	0	146	190	336	-	-	-	60	60	5.600	100

South: Desde Palmas del Mar

Effective Lane Use	Mov No.	Arv Flow (veh/h) Lef	Thru	Rig	Tot	Saturation Flow Basic (tcu)	Aver (veh) 1st	2nd	Min Cap (veh /h)	Tot Cap (veh /h)	Deg. Satn x	Lane Util %
******	32	99	0	0	99	-	-	-	60	251	0.394	100
****** ****	32, 31	81	133	0	214	-	-	-	60	545	0.394	100
****** ****	31, 33	0	689	46	735	1900	-	-	64	1867	0.394	100

East: Desde Palmas del Mar

Effective Lane Use	Mov No.	Arv Flow (veh/h) Lef	Thru	Rig	Tot	Saturation Flow Basic (tcu)	Aver (veh) 1st	2nd	Min Cap (veh /h)	Tot Cap (veh /h)	Deg. Satn x	Lane Util %
****** ****	22	67	17	0	84	-	-	-	60	60	1.401	100
****** ****	22, 23	0	230	443	673	-	-	-	60	480	1.401	100

North: Desde PR-906(PR-53,PR-3)

Effective Lane Use	Mov No.	Arv Flow (veh/h) Lef	Thru	Rig	Tot	Saturation Flow Basic (tcu)	Aver (veh) 1st	2nd	Min Cap (veh /h)	Tot Cap (veh /h)	Deg. Satn x	Lane Util %
******	42	229	0	0	229	-	-	-	60	517	0.444	100
****** ****	42, 41	84	533	0	617	-	-	-	60	1390	0.444	100
****** ****	41, 43	0	603	201	804	1900	-	-	80	1812	0.444	100

de Mercadeo - Palmas del Mar * N906_923
rsecci¢n PR-906 y PR-923 2020 - Entrada Norte - No Semaforo
rsection No.: 2
Stop Sign Controlled Intersection

e S.12A - FUEL CONSUMPTION, EMISSIONS AND COST - TOTAL

ov o.		Fuel Total L/h	Cost Total $/h	HC Total kg/h	CO Total kg/h	NOX Total kg/h	CO2 Total kg/h	Lead Total kg/h
st: Centro de Mercadeo								
12	L	78.5	1532.13	1.112	11.44	0.393	195.8	0.00000
11	T	96.4	1978.80	1.439	13.82	0.452	240.5	0.00000
13	R	75.0	1393.05	1.010	11.13	0.400	187.0	0.00000
		249.8	4903.99	3.562	36.40	1.245	623.3	0.00000
South: Desde Palmas del Mar								
32	L	21.3	52.40	0.068	4.63	0.141	53.2	0.00000
31	T	35.2	78.41	0.089	3.91	0.102	87.9	0.00000
33	R	3.6	7.93	0.014	0.83	0.017	9.0	0.00000
		60.1	138.74	0.171	9.36	0.261	150.1	0.00000
East: Desde Palmas del Mar								
22	LT	48.6	334.18	0.292	8.47	0.263	121.4	0.00000
23	R	62.6	429.34	0.398	11.60	0.310	156.4	0.00000
		111.2	763.52	0.691	20.07	0.573	277.8	0.00000
N.	1: Desde PR-906(PR-53,PR-3)							
42	L	40.8	103.22	0.149	6.74	0.120	101.5	0.00000
41	T	142.3	292.13	0.336	16.30	0.463	355.8	0.00000
43	R	31.9	65.94	0.082	4.78	0.140	79.6	0.00000
		215.0	461.29	0.566	27.82	0.722	536.8	0.00000
INTERSECTION:		636.1	6267.54	4.990	93.65	2.801	1586.0	0.00000

Centro de Mercadeo - Palmas del Mar * N906_923
Intersecci¢n PR-906 y PR-923 2020 - Entrada Norte - No Semaforo
Intersection No.: 2
Stop Sign Controlled Intersection

Table S.12B - FUEL CONSUMPTION, EMISSIONS AND COST - RATE

Mov No.		Fuel Rate mL/km	Cost Rate c/km	HC Rate g/km	CO Rate g/km	NOX Rate g/km	CO2 Rate g/km	Lead Rate g/km
West: Centro de Mercadeo								
12	L	980.6	1914.14	13.899	142.97	4.915	2445.8	0.00000
11	T	933.8	1917.24	13.941	133.94	4.383	2330.4	0.00000
13	R	1050.7	1952.32	14.157	156.00	5.600	2620.2	0.00000
		981.3	1926.10	13.989	142.96	4.891	2447.9	0.00000
South: Desde Palmas del Mar								
32	L	360.7	88.62	1.148	78.23	2.387	900.5	0.00000
31	T	139.8	31.15	0.355	15.52	0.407	349.3	0.00000
33	R	239.4	52.94	0.928	55.37	1.139	598.4	0.00000

	184.5	42.59	0.525	28.73	0.800	460.8	0.00000
East: Desde Palmas del Mar							
22 LT	322.5	221.97	1.942	56.23	1.747	806.1	0.00000
23 R	297.2	203.80	1.891	55.07	1.471	742.5	0.00000
	307.8	211.37	1.912	55.56	1.586	769.0	0.00000
North: Desde PR-906(PR-53,PR-3)							
42 L	192.2	48.60	0.702	31.75	0.563	477.8	0.00000
41 T	191.0	39.19	0.450	21.86	0.621	477.3	0.00000
43 R	234.7	48.56	0.601	35.20	1.031	586.2	0.00000
	196.6	42.18	0.518	25.44	0.660	490.9	0.00000
INTERSECTION:	312.6	307.96	2.452	46.01	1.376	779.3	0.00000

Centro de Mercadeo - Palmas del Mar * N906_923
Intersecci¢n PR-906 y PR-923 2020 - Entrada Norte - No Semaforo
Intersection No.: 2
Stop Sign Controlled Intersection

Table S.15 - CAPACITY AND LEVEL OF SERVICE (HCM STYLE)

Mov No.	Mov Typ	Total Flow (veh /h)	Total Cap. (veh /h)	Deg. of Satn (v/c)	Aver. Delay (sec)	LOS
West: Centro de Mercadeo						
L		210	38	5.526	2239.6	F
T		272	49	5.551	2241.3	F
13 R	(Un1)	190	34	5.588*	2242.8	F
		672	121	5.588	2241.2	F
South: Desde Palmas del Mar						
32 L		180	457	0.394	32.2	D
31 T		822	2088	0.394	5.8	A
33 R	(Un2)	46	117	0.393	0.6	A
		1048	2662	0.394	10.1	B
East: Desde Palmas del Mar						
22 LT		314	224	1.402	254.9	F
23 R	(Un2)	443	316	1.402	227.0	F
		757	540	1.402	238.5	F
North: Desde PR-906(PR-53,PR-3)						
42 L		313	705	0.444	20.7	C
41 T		1136	2560	0.444	9.6	B
43 R	(Un2)	201	453	0.444	2.6	A
		1650	3718	0.444	10.9	B
ALL VEHICLES:		4127	7041	5.588	415.6	F
/RSECTION:		4127	7041	5.588	415.6	F

Level of Service calculations are based on delay (HCM criteria).
* Maximum v/c ratio, or critical green periods

Intersecci¢n PR-906 y PR-923 2020 - Entrada Norte - No Semaforo
Intersection No.: 2
Stop Sign Controlled Intersection

Table D.0 - GEOMETRIC DELAY DATA

From Approach	To Approach	Negn Radius (m)	Negn Speed (km/h)	Negn Distance (m)
West: Centro de Mercadeo				
	South	10	18	16
	East	S	26	26
	North	15	22	24
South: Desde Palmas del Mar				
	West	13	20	20
	East	10	18	16
	North	S	64	18
East: Desde Palmas del Mar				
	West	S	26	26
	South	14	21	22
	North	10	18	16
North: Desde PR-906(PR-53,PR-3)				
	West	10	18	16
	South	S	64	18
	East	13	20	20

Centro de Mercadeo - Palmas del Mar * N906_923
Intersecci¢n PR-906 y PR-923 2020 - Entrada Norte - No Semaforo
Intersection No.: 2
Stop Sign Controlled Intersection

Table D.1 - LANE DELAYS

Lane No.	Mov No.	Deg. Satn x	Delay (seconds/veh) Analytical 1st dm1	Analytical 2nd dm2	Model Total dm	Acc. Dec. dn	Queu -ing dq	Ratio dm/ di	Stopd (Idle) di	Geom dg	Overall d
West: Centro de Mercadeo											
1 LT	12, 11	5.600	85.5	2140.6	2226.1	3.0	2223.1	1.00	2222.4	13.7 13.1	2239.6
2 TR	11, 13	5.600	88.8	2140.6	2229.5	2.8	2226.7	1.00	2220.2	13.1 13.5	2242.8
South: Desde Palmas del Mar											
1 L	32	0.394	19.5	2.6	22.1	4.4	17.7	1.37	16.2	10.1	32.2
2 LT	32, 31	0.394	27.4	1.0	28.4	8.5	19.9	1.45	19.6	10.1 0.0	32.2
3 TR	31, 33	0.394	0.0	0.0	0.0	0.0	0.0	0.00	0.0	0.0 10.1	0.6
East: Desde Palmas del Mar											
1 LT	22	1.401	16.1	304.8	320.8	3.2	317.7	1.01	316.2	10.4	331.3
2 TR	22, 23	1.401	12.7	203.8	216.5	2.7	213.7	1.12	193.4	10.3 10.6	227.0
North: Desde PR-906(PR-53,PR-3)											
1 L	42	0.444	9.2	1.9	11.1	3.9	7.2	2.13	5.2	10.7	21.8
2 LT	42, 41	0.444	14.7	1.5	16.1	9.9	6.2	2.67	6.0	10.7 0.0	17.6

3 TR	41, 43	0.444	0.0	0.0	0.0	0.0	0.0	0.00	0.0	0.0 10.2	2.6

dn is average stop-start delay for all vehicles queued and unqueued

C ro de Mercadeo - Palmas del Mar * N906_923
rsecci¢n PR-906 y PR-923 2020 - Entrada Norte - No Semaforo
Intersection No.: 2
Stop Sign Controlled Intersection

Table D.2 - LANE STOPS

Lane No.	Mov No.	Deg. Satn x	-- Effective Stop Rate -- he1	he2	Geom. hg	Overall h	Prop. Queued pq	Queue Move-up Rate hqm
West: Centro de Mercadeo								
1 LT	12, 11	5.600	1.00	0.03	0.00	1.03	1.000	0.42
2 TR	11, 13	5.600	1.00	0.26	0.00	1.26	1.000	3.17
South: Desde Palmas del Mar								
1 L	32	0.394	0.91	0.06	0.06	1.03	0.906	0.67
2 LT	32, 31	0.394	0.38	0.01	0.00	0.39	1.000	0.34
3 TR	31, 33	0.394	0.00	0.00	0.04	0.04	0.000	0.00
East: Desde Palmas del Mar								
T	22	1.401	1.00	0.08	0.00	1.08	1.000	0.91
R	22, 23	1.401	1.00	1.20	0.00	2.20	1.000	9.89
North: Desde PR-906(PR-53,PR-3)								
1 L	42	0.444	0.80	0.08	0.13	1.01	0.799	0.64
2 LT	42, 41	0.444	0.14	0.01	0.00	0.14	1.000	0.52
3 TR	41, 43	0.444	0.00	0.00	0.17	0.17	0.000	0.00

hqm is average queue move-up rate for all vehicles queued and unqueued

Centro de Mercadeo - Palmas del Mar * N906_923
Intersecci¢n PR-906 y PR-923 2020 - Entrada Norte - No Semaforo
Intersection No.: 2
Stop Sign Controlled Intersection

Table D.3 - LANE QUEUES

Lane No.	Mov No.	Deg. Satn x	Ovrfl. Queue No	Average Nb1	Nb2	Nb	Percentile 90%	95%	98%	Queue Stor. Ratio
West: Centro de Mercadeo										
1 LT	12, 11	5.600	40.7	191.4	48.1	239.6	455.2	598.9	718.7	1.93
2 R	11, 13	5.600	35.3	15.2	37.0	52.2	99.2	130.5	156.6	0.42
South: Desde Palmas del Mar										
1 L	32	0.394	0.2	0.7	0.3	1.0	2.4	3.0	3.5	0.03

2 LT	32, 31	0.394	0.2	1.6	0.2	1.8	4.4	5.5	6.4	0.02
3 TR	31, 33	0.394	0.0	0.0	0.0	0.0	0.0	0.0	0.0	0.00
East: Desde Palmas del Mar										
LT	22	1.401	6.1	14.0	7.1	21.2	41.2	53.9	64.5	0.10
TR	22, 23	1.401	25.4	3.2	27.3	30.5	58.4	76.7	92.0	0.14
North: Desde PR-906(PR-53,PR-3)										
1 L	42	0.444	0.3	0.9	0.5	1.4	3.5	4.4	5.1	0.06
2 LT	42, 41	0.444	0.6	2.9	1.0	3.9	9.0	11.3	13.3	0.01
3 TR	41, 43	0.444	0.0	0.0	0.0	0.0	0.0	0.0	0.0	0.00

Values printed in this table are back of queue.

Centro de Mercadeo - Palmas del Mar * N906_923
Intersección PR-906 y PR-923 2020 - Entrada Norte - No Semaforo
Intersection No.: 2
Stop Sign Controlled Intersection

Table D.4 - MOVEMENT SPEEDS (km/h)

Mov No.	App. Speeds Cruise	App. Speeds Negn	Exit Speeds Negn	Exit Speeds Cruise	Queue Move-up 1st Grn	Queue Move-up 2nd Grn	Av. Section Spd Running	Av. Section Spd Overall
t: Centro de Mercadeo								
2	64.0	0.0	22.0	64.0	2.7		38.7	0.6
11	64.0	0.0	26.0	64.0	2.9		36.4	0.6
13	64.0	0.0	18.0	64.0	3.9		32.7	0.6
South: Desde Palmas del Mar								
32	64.0	20.0	20.0	64.0	3.8		34.6	22.2
31	64.0	64.0	64.0	64.0	0.0		58.1	50.5
33	64.0	18.0	18.0	64.0			41.3	41.3
East: Desde Palmas del Mar								
22	40.0	0.0	24.9	64.0	2.6		28.5	6.0
23	40.0	0.0	18.0	64.0	4.1		23.9	6.5
North: Desde PR-906(PR-53,PR-3)								
42	64.0	20.0	20.0	64.0	5.3		45.2	40.3
41	64.0	64.0	64.0	64.0	0.0		56.3	53.1
43	64.0	18.0	18.0	64.0			50.6	50.6

--- End of SIDRA Output ---

TRAFFIC ANALYSIS

GRAPHIC SUMMARY OF TRAFFIC FLOW

DATE _____ DAY _____ WEATHER _____ PERIOD 3PM TO 6PM

MUNICIPALITY Humacao URBAN ZONE ☐ RURAL ☐ SUB-URBAN ☐

INTERSECTION OF PR-906 WITH Rampa PR-53 / Tierra del Sol

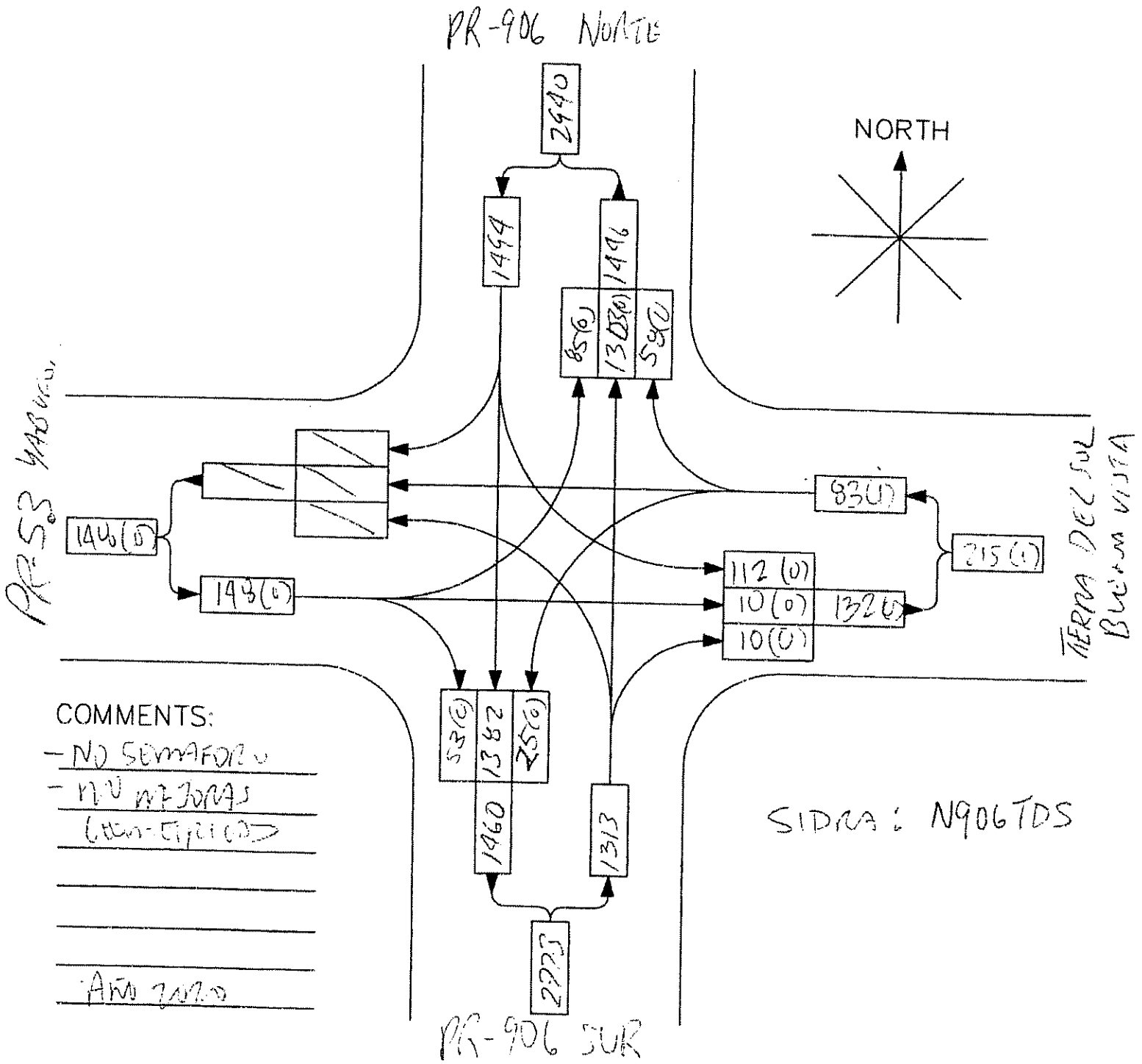

COMMENTS:

- NO SEMAFORO
- NO MEJORAS
(Geometricos)

AÑO 2020

SIDRA: N906TDS

ARRB Transport Research Ltd - SIDRA 5.02a

CMA ARCHITECTS & ENGINEERS
CIVIL Registered User No. M0138
Time and Date of Analysis 16:32:53 12/19/00

:o de Mercadeo - Palmas del Mar 2020 * N906TDS *
:rsecci¢n PR-906 y Tierra del Sol-Comunidades Buena Vista No Semaforo
:rsection No.: 3

:RA US Highway Capacity Manual (1994) Version
Stop Sign Controlled Intersection

:N INFORMATION

Basic Parameters:
Intersection Type: Unsignalised - Two-Way Stop Control
Driving on the right-hand side of the road
SIDRA US Highway Capacity Manual (1994) Version
Input data specified in Metric units
Default Values File No. 11
Peak flow period (for performance): 15 minutes
Unit time (for volumes): 60 minutes (Total Flow Period)
Delay definition: Overall delay,
Geometric delay included
Delay formula: Highway Capacity Manual
Level of Service based on: Delay (HCM)
Queue definition: Back of queue, 95th_Percentile

Centro de Mercadeo - Palmas del Mar 2020 * N906TDS *
Intersecci¢n PR-906 y Tierra del Sol-Comunidades Buena Vista No Semaforo
I rsection No.: 3

PARAMETERS

Default values for some of the important general parameters:
(Default Values File: DEF11.SDF)

1. Basic saturation flow: 1900 tcu/h

   This value applies to signalised intersections and priority and continuous movements at roundabouts and unsignalised intersections. Saturation flows (capacities) for all opposed movements at roundabouts and sign-controlled intersections are estimated from a gap-acceptance based model.

2. Through car equivalents for signalised intersections

	LEFT		THROUGH		RIGHT	
	LV	HV	LV	HV	LV	HV
Normal	1.053	2.000	1.000	2.000	1.176	2.000
Restricted	1.303	2.500			1.426	2.500

3. Opposed turn parameters (Two-Way Stop Control)

	Crit. Gap	Fol.up Hdway	Min. Deps	% Exit Flow Opposing
Left turns :	7.0	3.40	1.0	50
Through :	6.5	3.30	1.0	50
Right turns:	5.5	2.60	1.0	50
Opposed turns from priority road:	5.5	2.60	1.0	0

4. Cruise speed= 40 km/h, Approach Distance= 1500 m

5. Queue space per vehicle in metres

Light vehicles: 0.3 Heavy vehicles: 0.4

Centro de Mercadeo - Palmas del Mar 2020 * N906TDS *
Intersecci¢n PR-906 y Tierra del Sol-Comunidades Buena Vista No Semaforo
Intersection No.: 3
Stop Sign Controlled Intersection

Table S.0 - TRAFFIC FLOW DATA (Flows in veh/hour as used by the program)

Mov No.	Left		Through		Right		Flow Scale	Peak Flow Factor
	LV	HV	LV	HV	LV	HV		
West: Rampa desde PR-53 Yabucoa								
12	94	4	11	0	0	0	1.00	0.90
13	0	0	0	0	59	1	1.00	0.90
South: Desde PR-923 y Palmas Mar								
31	0	0	1448	18	0	0	1.00	0.90
33	0	0	0	0	11	1	1.00	0.90
East: Desde Tierra del Sol								
22	28	1	0	0	0	0	1.00	0.90
23	0	0	0	0	64	2	1.00	0.90
North: Desde PR-906(PR-53,PR-3)								
42	124	1	0	0	0	0	1.00	0.90
41	0	0	1536	13	0	0	1.00	0.90

Based on unit time = 60 minutes.
Flow Scale and Peak Hour Factor effects included in flow values.

C ro de Mercadeo - Palmas del Mar 2020 * N906TDS *
1 rsecci¢n PR-906 y Tierra del Sol-Comunidades Buena Vista No Semaforo
Intersection No.: 3
Stop Sign Controlled Intersection

Table S.2 - MOVEMENT CAPACITY PARAMETERS

Mov No.	Arv Flow (veh /h)	Total Opng Flow (veh/h)	%HV	Adjust. Opng Flow (pcu/h)	Total Cap. (veh /h)	Prac. Deg. Satn xp	Prac. Spare Cap. (%)	Lane Util (%)	Deg. Satn x
West: Rampa desde PR-53 Yabucoa									
12 LT	109	DIFF			39	0.80	-71	100	2.795
13 R	60	1549	0.8	1549	21	0.80	-72	100	2.857*
South: Desde PR-923 y Palmas Mar									
31 T	1466	0			3716	0.80	103	100	0.395
33 R	12	0			30	0.80	100	100	0.400
East: Desde Tierra del Sol									
22 L	29	3223+	1.1	3223	18	0.80	-50	100	1.611
23 R	66	1478+	1.3	1478	42	0.80	-49	100	1.571
North: Desde PR-906(PR-53,PR-3)									
42 L	125	1478	1.3	1478	258	0.80	65	100	0.484
41 T	1549	0			3192	0.80	65	100	0.485

DIFF Opposing flow was not printed as there was more than one opposed turn in this movement with differing opposing flows
\+ Percentage of exiting flow included in total opposing flow

Intersecci¢n PR-906 y Tierra del Sol-Comunidades Buena Vista No Semaforo
Intersection No.: 3
Stop Sign Controlled Intersection

Table S.3 - INTERSECTION PARAMETERS

egree of Saturation (Highest)	=	2.857
Practical Spare Capacity (Lowest)	=	-72 %
Total Vehicle Flow	=	3416
Total Vehicle Capacity (all lanes)	=	7316

Centro de Mercadeo - Palmas del Mar 2020 * N906TDS *
Intersecci¢n PR-906 y Tierra del Sol-Comunidades Buena Vista No Semaforo
Intersection No.: 3
Stop Sign Controlled Intersection

Table S.5 - MOVEMENT PERFORMANCE

Mov No.		Total Delay (veh-h/h)	Aver. Delay (sec)	Prop. Queued	Eff. Stop Rate	Longest Queue 95% Back (vehs)	(m)	Perf. Index	Aver. Speed (km/h)
West: Rampa desde PR-53 Yabucoa									
12	LT	31.06	1025.8	1.00	1.04	266.2	306	101.19	1.6
13	R	17.10	1025.8	1.00	1.05	266.2	306	55.70	1.6
South: Desde PR-923 y Palmas Mar									
31	T	0.04	0.1	0.00	0.00	0.0	0	8.19	64.0
33	R	0.00	0.2	0.00	0.70	0.0	0	0.12	43.3
E[illegible]: Desde Tierra del Sol									
2	L	3.95	490.9	1.00	1.10	91.1	105	15.39	1.6
23	R	9.00	490.9	1.00	1.13	91.1	105	35.02	1.6
North: Desde PR-906(PR-53,PR-3)									
42	L	1.48	42.6	0.95	1.09	20.3	21	5.12	29.5
41	T	9.26	21.5	0.41	0.00	20.3	21	32.13	40.6

Centro de Mercadeo - Palmas del Mar 2020 * N906TDS *
Intersecci¢n PR-906 y Tierra del Sol-Comunidades Buena Vista No Semaforo
Intersection No.: 3
Stop Sign Controlled Intersection

Table S.6 - INTERSECTION PERFORMANCE

Total Flow (veh/h)	Total Delay (veh-h/h)	Aver. Delay (sec)	Prop. Queued	Eff. Stop Rate	Perf. Index	Aver. Speed (km/h)
West: Rampa desde PR-53 Yabucoa						
169	48.16	1025.8	1.000	1.05	156.90	1.6
South: Desde PR-923 y Palmas Mar						
1478	0.04	0.1	0.000	0.01	8.31	63.7
East: Desde Tierra del Sol						
[illegible]	12.95	490.9	1.000	1.12	50.41	1.6
North: Desde PR-906(PR-53,PR-3)						
1674	10.74	23.1	0.450	0.08	37.25	39.4
INTERSECTION:						

3416	71.88	75.8	0.298	0.13	252.87	17.5

Centro de Mercadeo - Palmas del Mar 2020 * N906TDS *
Intersecci¢n PR-906 y Tierra del Sol-Comunidades Buena Vista No Semaforo
Intersection No.: 3
Stop Sign Controlled Intersection

Table S.7 - LANE PERFORMANCE

Lane No.	Mov No.	Arv Flow (veh /h)	Cap (veh /h)	Deg. Satn x	Aver. Delay (sec)	Eff. Stop Rate	Queue 95% Back (vehs)	Queue 95% Back (m)	Short Lane (m)
West: Rampa desde PR-53 Yabucoa									
1 LTR	12, 13	169	60	2.817	1025.8	1.05	266.2	306	
South: Desde PR-923 y Palmas Mar									
1 T	31	740	1877	0.394	0.0	0.00	0.0	0	
2 TR	31, 33	738	1870	0.394	0.2	0.70	0.0	0	
East: Desde Tierra del Sol									
1 LR	22, 23	95	60	1.583	490.9	1.13	91.1	105	
North: Desde PR-906(PR-53,PR-3)									
1 L	42	96	197	0.485	39.5	1.09	3.9	4	60
2 LT	42, 41	664	1368	0.485	52.5	0.00	20.3	21	
3 T	41	914	1884	0.485	0.0	0.00	0.0	0	

Centro de Mercadeo - Palmas del Mar 2020 * N906TDS *
Intersecci¢n PR-906 y Tierra del Sol-Comunidades Buena Vista No Semaforo
Intersection No.: 3
Stop Sign Controlled Intersection

Table S.8 - LANE FLOW AND CAPACITY INFORMATION

West: Rampa desde PR-53 Yabucoa

Effective Lane Use	Mov No.	Arv Flow (veh/h) Lef	Thru	Rig	Tot	Saturation Flow Basic (tcu)	Aver(veh) 1st	2nd	Min Cap (veh /h)	Tot Cap (veh /h)	Deg. Satn x	Lane Util %
* *** * * ****** **** * * *** *	12, 13	98	11	60	169	-	-	-	60	60	2.817	100

South: Desde PR-923 y Palmas Mar

Effective Lane Use	Mov No.	Arv Flow (veh/h) Lef	Thru	Rig	Tot	Saturation Flow Basic (tcu)	Aver(veh) 1st	2nd	Min Cap (veh /h)	Tot Cap (veh /h)	Deg. Satn x	Lane Util %
* ********** * *	31	0	740	0	740	1900	-	-	60	1877	0.394	100

Effective Lane Use	Mov No.	Arv Flow (veh/h) Lef	Thru	Rig	Tot	Saturation Flow Basic (tcu)	Aver 1st	Aver 2nd	Min Cap (veh /h)	Tot Cap (veh /h)	Deg. Satn x	Lane Util %
****** ****	31, 33	0	726	12	738	1900	-	-	61	1870	0.394	100

East: Desde Tierra del Sol

Effective Lane Use	Mov No.	Arv Flow (veh/h) Lef	Thru	Rig	Tot	Saturation Flow Basic (tcu)	Aver 1st	Aver 2nd	Min Cap (veh /h)	Tot Cap (veh /h)	Deg. Satn x	Lane Util %
******	22, 23	29	0	66	95	-	-	-	60	60	1.583	100

North: Desde PR-906(PR-53,PR-3)

Effective Lane Use	Mov No.	Arv Flow (veh/h) Lef	Thru	Rig	Tot	Saturation Flow Basic (tcu)	Aver 1st	Aver 2nd	Min Cap (veh /h)	Tot Cap (veh /h)	Deg. Satn x	Lane Util %
******	42	96	0	0	96	-	-	-	60	197	0.485	100
****** ****	42, 41	29	635	0	664	-	-	-	60	1368	0.485	100
**********	41	0	914	0	914	-	-	-	60	1884	0.485	100

Centro de Mercadeo - Palmas del Mar 2020 * N906TDS *
Intersecci¢n PR-906 y Tierra del Sol-Comunidades Buena Vista No Semaforo
Intersection No.: 3
Stop Sign Controlled Intersection

Table S.12A - FUEL CONSUMPTION, EMISSIONS AND COST - TOTAL

Mov No.	Fuel Total L/h	Cost Total $/h	HC Total kg/h	CO Total kg/h	NOX Total kg/h	CO2 Total kg/h	Lead Total kg/h
West: Rampa desde PR-53 Yabucoa							
12 LT	30.8	384.03	0.288	4.80	0.173	76.8	0.00000
13 R	16.6	210.81	0.158	2.57	0.091	41.3	0.00000
	47.4	594.84	0.445	7.37	0.264	118.1	0.00000
South: Desde PR-923 y Palmas Mar							
31 T	89.9	167.51	0.102	6.27	0.373	224.4	0.00000
3 R	1.2	2.59	0.004	0.27	0.006	3.1	0.00000
	91.1	170.10	0.107	6.55	0.379	227.5	0.00000
East: Desde Tierra del Sol							
22 L	5.1	50.48	0.040	1.00	0.034	12.7	0.00000
23 R	11.4	114.70	0.092	2.27	0.076	28.4	0.00000

	16.5	165.18	0.133	3.28	0.110	41.1	0.00000
North: Desde PR-906(PR-53,PR-3)							
42 L	22.3	56.27	0.062	3.36	0.104	55.7	0.00000
41 T	253.3	535.55	0.483	30.68	1.263	632.8	0.00000
	275.6	591.81	0.544	34.04	1.367	688.5	0.00000
INTERSECTION:	430.5	1521.93	1.229	51.24	2.120	1074.7	0.00000

Centro de Mercadeo - Palmas del Mar 2020 * N906TDS *
Intersecci¢n PR-906 y Tierra del Sol-Comunidades Buena Vista No Semaforo
Intersection No.: 3
Stop Sign Controlled Intersection

Table S.12B - FUEL CONSUMPTION, EMISSIONS AND COST - RATE

Mov No.	Fuel Rate mL/km	Cost Rate c/km	HC Rate g/km	CO Rate g/km	NOX Rate g/km	CO2 Rate g/km	Lead Rate g/km
West: Rampa desde PR-53 Yabucoa							
12 LT	590.5	736.14	5.512	92.09	3.307	1471.9	0.00000
13 R	580.1	738.84	5.533	90.07	3.195	1448.3	0.00000
	586.8	737.09	5.520	91.37	3.267	1463.5	0.00000
South: Desde PR-923 y Palmas Mar							
31 T	172.1	32.08	0.196	12.01	0.713	429.8	0.00000
33 R	273.5	57.44	0.972	60.43	1.368	679.2	0.00000
	172.9	32.30	0.202	12.43	0.719	431.9	0.00000
East: Desde Tierra del Sol							
22 L	769.4	765.08	6.126	152.16	5.154	1918.1	0.00000
23 R	766.3	770.52	6.188	152.62	5.106	1911.0	0.00000
	767.2	768.85	6.169	152.48	5.120	1913.2	0.00000
North: Desde PR-906(PR-53,PR-3)							
42 L	263.3	66.44	0.729	39.71	1.226	657.8	0.00000
41 T	249.2	52.69	0.475	30.18	1.243	622.6	0.00000
	250.3	53.75	0.494	30.91	1.242	625.3	0.00000
INTERSECTION:	248.9	87.97	0.710	29.62	1.225	621.2	0.00000

Centro de Mercadeo - Palmas del Mar 2020 * N906TDS *
Intersecci¢n PR-906 y Tierra del Sol-Comunidades Buena Vista No Semaforo
Intersection No.: 3
Stop Sign Controlled Intersection

Table S.15 - CAPACITY AND LEVEL OF SERVICE (HCM STYLE)

Mov	Mov Typ	Total Flow (veh /h)	Total Cap. (veh /h)	Deg. of Satn (v/c)	Aver. Delay (sec)	LOS
West: Rampa desde PR-53 Yabucoa						
12 LT		109	39	2.795	1025.8	F
13 R	(Unl)	60	21	2.857*	1025.8	F

	169	60	2.857	1025.8	F
th: Desde PR-923 y Palmas Mar					
1 T	1466	3716	0.395	0.1	A
3 R (Un2)	12	30	0.400	0.2	A
	1478	3746	0.400	0.1	A
t: Desde Tierra del Sol					
2 L	29	18	1.611	490.9	F
3 R (Un1)	66	42	1.571	490.9	F
	95	60	1.611	490.9	F
rth: Desde PR-906(PR-53,PR-3)					
42 L	125	258	0.484	42.6	E
41 T	1549	3192	0.485	21.5	D
	1674	3450	0.485	23.1	D
ALL VEHICLES:	3416	7316	2.857	75.8	F
INTERSECTION:	3416	7316	2.857	75.8	F

Level of Service calculations are based on delay (HCM criteria).
* Maximum v/c ratio, or critical green periods

Centro de Mercadeo - Palmas del Mar 2020 * N906TDS *
Intersecci¢n PR-906 y Tierra del Sol-Comunidades Buena Vista No Semaforo
Intersection No.: 3
Stop Sign Controlled Intersection

Table D.0 - GEOMETRIC DELAY DATA

From Approach	To Approach	Negn Radius (m)	Negn Speed (km/h)	Negn Distance (m)
West: Rampa desde PR-53 Yabucoa				
	South	10	18	16
	East	S	26	26
	North	13	20	20
South: Desde PR-923 y Palmas Mar				
	East	10	18	16
	North	S	64	12
East: Desde Tierra del Sol				
	South	12	20	19
	North	10	18	16
North: Desde PR-906(PR-53,PR-3)				
	South	S	64	12
	East	12	20	19

Centro de Mercadeo - Palmas del Mar 2020 * N906TDS *
Ir secci¢n PR-906 y Tierra del Sol-Comunidades Buena Vista No Semaforo
In section No.: 3
Stop Sign Controlled Intersection

Table D.1 - LANE DELAYS

Lane No.	Mov No.	Deg. Satn x	Delay (seconds/veh) Analytical 1st dm1	Model 2nd dm2	Total dm	Acc. Dec. dn	Queu -ing dq	Ratio dm/ di	Stopd (Idle) di	Geom dg	Overall d
West: Rampa desde PR-53 Yabucoa											
TR	12, 13	2.817	110.4	901.8	1012.2	2.6	1009.6	1.00	1008.4	13.7 13.3	1025.8
South: Desde PR-923 y Palmas Mar											
1 T	31	0.394	0.0	0.0	0.0	0.0	0.0	0.00	0.0	0.0	0.0
2 TR	31, 33	0.394	0.0	0.0	0.0	0.0	0.0	0.00	0.0	0.0 11.0	0.2
East: Desde Tierra del Sol											
1 LR	22, 23	1.583	103.8	376.2	480.0	2.5	477.5	1.01	475.5	11.0 10.9	490.9
North: Desde PR-906(PR-53,PR-3)											
1 L	42	0.485	24.9	4.7	29.6	4.6	25.1	1.33	22.3	9.9	39.5
2 LT	42, 41	0.485	48.8	3.2	52.1	10.5	41.6	1.25	41.5	9.9 0.0	52.5
3 T	41	0.485	0.0	0.0	0.0	0.0	0.0	0.00	0.0	0.0	0.0

dn is average stop-start delay for all vehicles queued and unqueued

T ¬ D.2 - LANE STOPS

Lane No.	Mov No.	Deg. Satn x	-- Effective Stop Rate -- he1	he2	Geom. hg	Overall h	Prop. Queued pq	Queue Move-up Rate hqm
West: Rampa desde PR-53 Yabucoa								
1 LTR	12, 13	2.817	1.00	0.05	0.00	1.05	1.000	0.51
South: Desde PR-923 y Palmas Mar								
1 T	31	0.394	0.00	0.00	0.00	0.00	0.000	0.00
2 TR	31, 33	0.394	0.00	0.00	0.01	0.01	0.000	0.00
East: Desde Tierra del Sol								
1 LR	22, 23	1.583	1.00	0.12	0.00	1.12	1.000	0.80
North: Desde PR-906(PR-53,PR-3)								
1 L	42	0.485	0.94	0.11	0.04	1.09	0.937	1.01
2 LT	42, 41	0.485	0.04	0.00	0.00	0.05	1.000	0.74
3 T	41	0.485	0.00	0.00	0.00	0.00	0.000	0.00

hqm is average queue move-up rate for all vehicles queued and unqueued

Centro de Mercadeo - Palmas del Mar 2020 * N906TDS *
Intersecci¢n PR-906 y Tierra del Sol-Comunidades Buena Vista No Semaforo
Intersection No.: 3
Stop Sign Controlled Intersection

Lane No.	Mov No.	Deg. Satn x	Ovrfl. Queue No	Average Nb1	Average Nb2	Average Nb	Percentile 90%	Percentile 95%	Percentile 98%	Queue Stor. Ratio
West: Rampa desde PR-53 Yabucoa										
TR	12, 13	2.817	19.9	82.1	24.4	106.5	202.3	266.2	319.5	1.02
South: Desde PR-923 y Palmas Mar										
1 T	31	0.394	0.0	0.0	0.0	0.0	0.0	0.0	0.0	0.00
2 TR	31, 33	0.394	0.0	0.0	0.0	0.0	0.0	0.0	0.0	0.00
East: Desde Tierra del Sol										
1 LR	22, 23	1.583	9.2	24.7	11.6	36.3	69.3	91.1	109.3	2.11
North: Desde PR-906(PR-53,PR-3)										
1 L	42	0.485	0.3	0.8	0.4	1.2	3.1	3.9	4.5	0.07
2 LT	42, 41	0.485	1.5	5.4	1.9	7.3	15.9	20.3	24.0	0.04
3 T	41	0.485	0.0	0.0	0.0	0.0	0.0	0.0	0.0	0.00

Values printed in this table are back of queue.

Centro de Mercadeo - Palmas del Mar 2020 * N906TDS *
Intersecci¢n PR-906 y Tierra del Sol-Comunidades Buena Vista No Semaforo
Intersection No.: 3
Stop Sign Controlled Intersection

Tr \ D.4 - MOVEMENT SPEEDS (km/h)

Mov No.	App. Speeds Cruise	App. Speeds Negn	Exit Speeds Negn	Exit Speeds Cruise	Queue Move-up 1st Grn	Queue Move-up 2nd Grn	Av. Section Spd Running	Av. Section Spd Overall
West: Rampa desde PR-53 Yabucoa								
12	64.0	0.0	20.6	64.0	3.6		41.8	1.6
13	64.0	0.0	18.0	64.0	4.7		41.6	1.6
South: Desde PR-923 y Palmas Mar								
31	64.0	64.0	64.0	64.0			64.0	64.0
33	64.0	18.0	18.0	64.0			43.3	43.3
East: Desde Tierra del Sol								
22	40.0	0.0	20.0	64.0	3.6		29.1	1.6
23	40.0	0.0	18.0	64.0	4.8		28.5	1.6
North: Desde PR-906(PR-53,PR-3)								
42	64.0	20.0	20.0	64.0	4.9		44.2	29.5
41	64.0	64.0	64.0	64.0	0.0		57.2	40.6

--- End of SIDRA Output ---

ANEJO NUM. 9

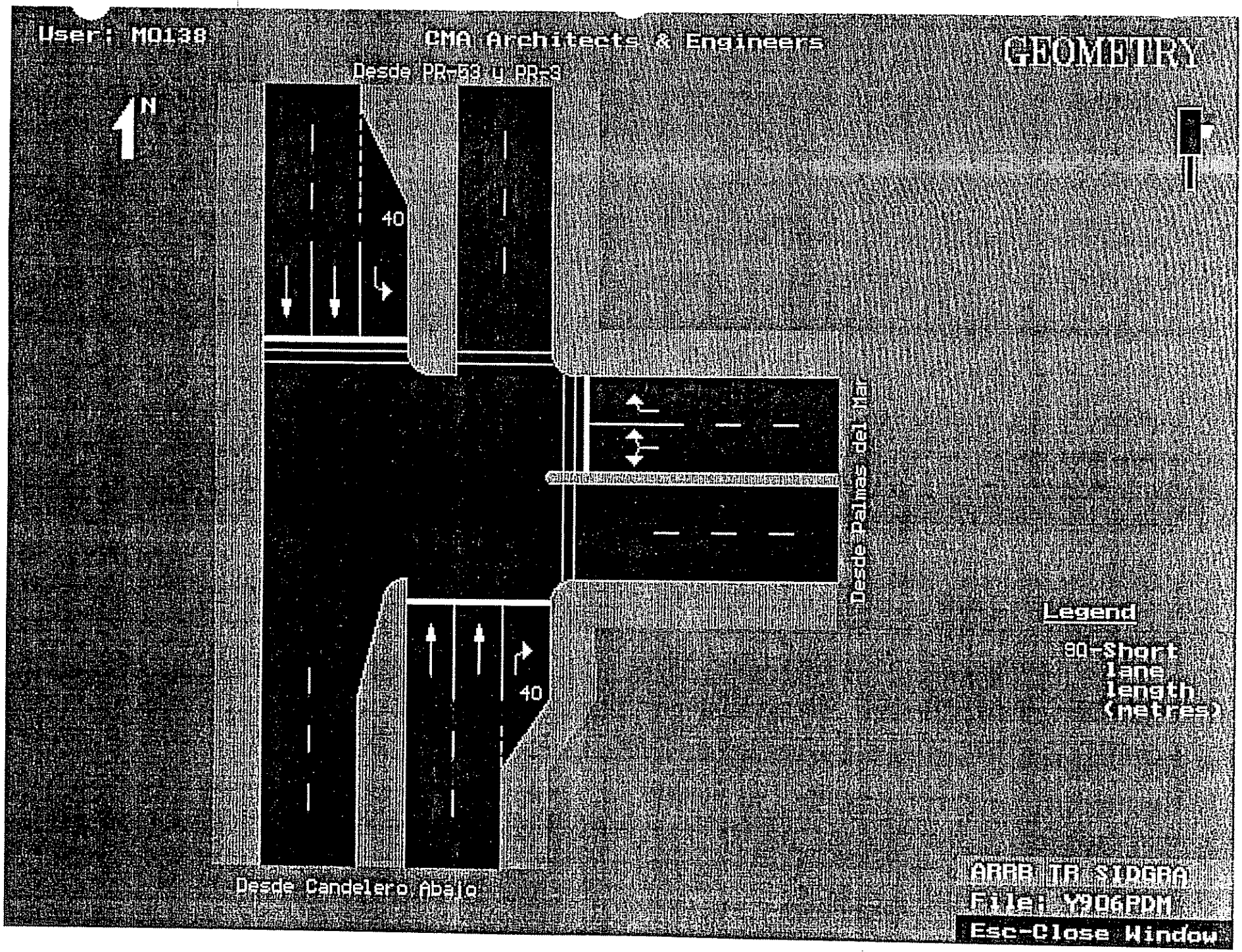
User: MO138
CMA Architects & Engineers
GEOMETRY
Desde PR-53 y PR-3
N
40
40
Desde Palmas del Mar
Desde Candelero Abajo
Legend
90-short lane length (metres)
ARRB TR SIDRRA
File: Y206PDM
Esc-Close Window

TRAFFIC ANALYSIS

GRAPHIC SUMMARY OF TRAFFIC FLOW

DATE _____ DAY _____ WEATHER _____ PERIOD 3PM TO 6PM

MUNICIPALITY Humacao URBAN ZONE ☐ RURAL ☐ SUB-URBAN ☒

INTERSECTION OF PR-906 WITH PDM

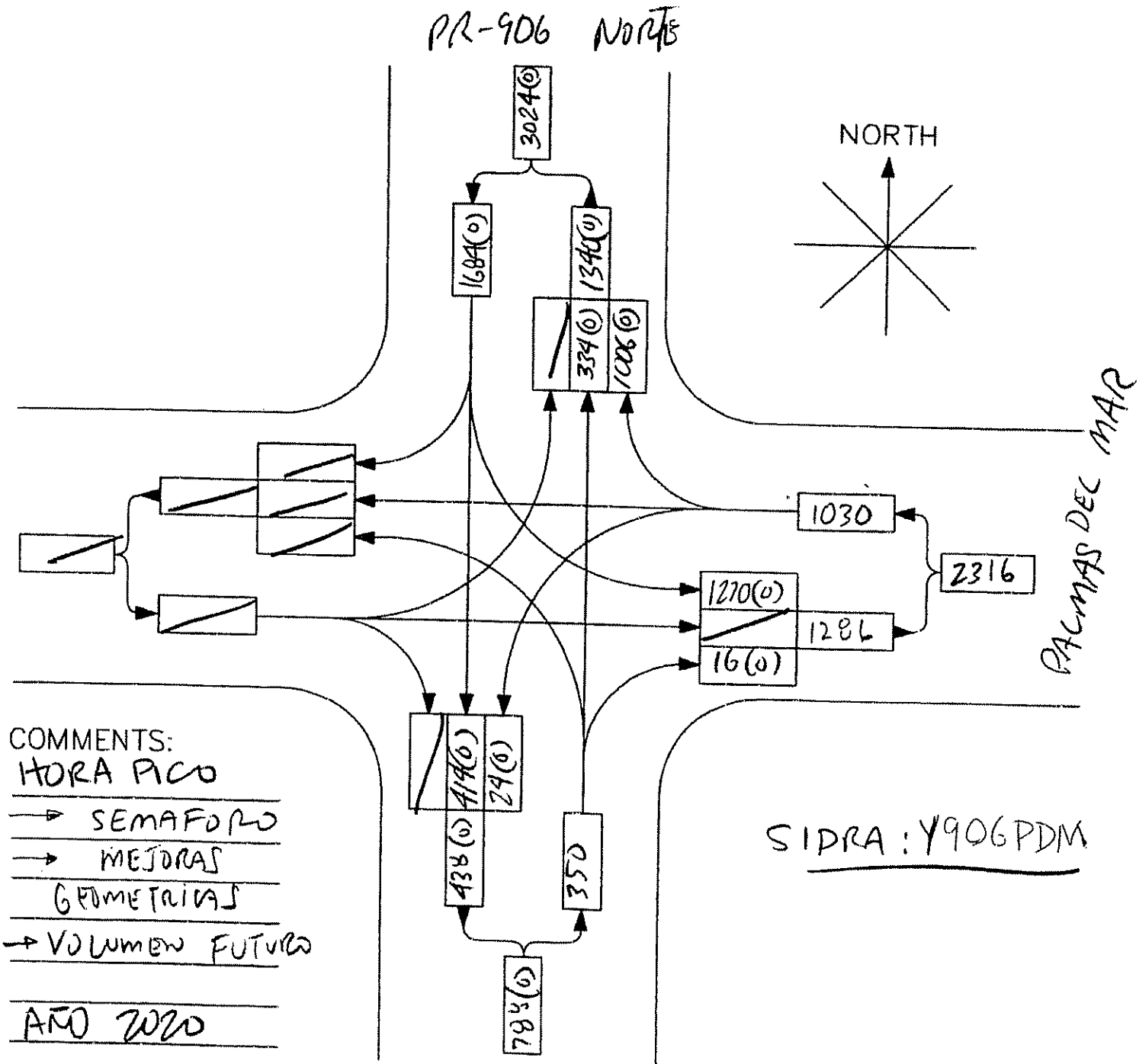

COMMENTS:
HORA PICO
→ SEMAFORO
→ MEJORAS GEOMETRICAS
→ VOLUMEN FUTURO

AÑO 2020

SIDRA: Y906PDM

ARRB Transport Research Ltd - SIDRA 5.02a

CMA ARCHITECTS & ENGINEERS
CIVIL Registered User No. M0138
Time and Date of Analysis 16:43:56 12/19/00

:ro de Mercadeo - Palmas del Mar * Y906PDM *
l..erseccion semaforizada PR-906 y Palmas del Mar 2020
Intersection No.: 1

SIDRA US Highway Capacity Manual (1994) Version
Cycle Time = 90

RUN INFORMATION

* Basic Parameters:
Intersection Type: Signalised - Pretimed
Driving on the right-hand side of the road
SIDRA US Highway Capacity Manual (1994) Version
Input data specified in Metric units
Default Values File No. 11
Peak flow period (for performance): 15 minutes
Unit time (for volumes): 60 minutes (Total Flow Period)
Delay definition: Overall delay,
Geometric delay included
Delay formula: Highway Capacity Manual
Level of Service based on: Delay (HCM)
Queue definition: Back of queue, 95th_Percentile

* No. of Main (Timing-Capacity) Iterations = 8
Comparison of last two iterations:
Difference in intersection degree of satn = 0.0 %
Difference in total vehicle capacity = 0.0 %
Largest difference in eff. green times = 0 secs
(max. value for stopping = 1 secs)

Centro de Mercadeo - Palmas del Mar * Y906PDM *
Interseccion semaforizada PR-906 y Palmas del Mar 2020
Intersection No.: 1

PARAMETERS

Default values for some of the important general parameters:
(Default Values File: DEF11.SDF)

1. Basic saturation flow: 1900 tcu/h

This value applies to signalised intersections and priority and continuous movements at roundabouts and unsignalised intersections. Saturation flows (capacities) for all opposed movements at roundabouts and sign-controlled intersections are estimated from a gap-acceptance based model.

2. Through car equivalents for signalised intersections

	LEFT		THROUGH		RIGHT	
	LV	HV	LV	HV	LV	HV
Normal	1.053	2.000	1.000	2.000	1.176	2.000
Restricted	1.303	2.500			1.426	2.500

3. Opposed turn parameters (Signalised intersection)

	Crit. Gap	Fol.up Hdway	Deps at End	% Exit Flow Opposing
Left turns :	4.0	2.57	2.0	0

Right turns: 4.0 2.57 2.5 0

4. Cruise speed= 40 km/h, Approach Distance= 1500 m

5. Queue space per vehicle in metres
Light vehicles: 0.3 Heavy vehicles: 0.4

Centro de Mercadeo - Palmas del Mar * Y906PDM *
Interseccion semaforizada PR-906 y Palmas del Mar 2020
Intersection No.: 1
Cycle Time = 90

Table S.0 - TRAFFIC FLOW DATA (Flows in veh/hour as used by the program)

Mov No.	Left		Through		Right		Flow Scale	Peak Flow Factor
	LV	HV	LV	HV	LV	HV		
South: Desde Candelero Abajo								
31	0	0	371	0	0	0	1.00	0.90
33	0	0	0	0	18	0	1.00	0.90
East: Desde Palmas del Mar								
22	27	0	0	0	0	0	1.00	0.90
23	0	0	0	0	1118	0	1.00	0.90
North: Desde PR-53 y PR-3								
42	1411	0	0	0	0	0	1.00	0.90
41	0	0	460	0	0	0	1.00	0.90
PEDESTRIANS	Flow (ped/hour)							
24			6				1.00	0.90
44			6				1.00	0.90

Based on unit time = 60 minutes.
Flow Scale and Peak Hour Factor effects included in flow values.

Centro de Mercadeo - Palmas del Mar * Y906PDM *
Interseccion semaforizada PR-906 y Palmas del Mar 2020
Intersection No.: 1
Cycle Time = 90

Table S.1 - MOVEMENT PHASE AND TIMING PARAMETERS

Mov No.	Mov Typ	PHASE MATRIX First Green Fr	To	Op	Pr	Second Green Fr	To	Op	Pr	Lost Tim 1st Grn	Lost Tim 2nd Grn	Req.Mov.Time 1st Grn	Req.Mov.Time 2nd Grn	Eff. Grn 1st Grn	Eff. Grn 2nd Grn
South: Desde Candelero Abajo															
31 T		*A	B							3		16.5		14	
33 R	(Un2)	A	B			B	A	R		3	45	14.0Min	24.0Min	14	28
East: Desde Palmas del Mar															
22 L		*B	C		H					3		14.0Min		13	
23 R	(Un1)	A	B	R		B	A			14	3	14.4	61.6	3	70
North: Desde PR-53 y PR-3															
L		*C	A							3		57.2		54	
T		C	B							3		36.6		71	
Pedestrians															
24	(Ped)	A	B							5		14.0Min		12	
44	(Ped)	B	C							5		14.0Min		11	

Current Phase Sequence No.: 1
Input phase sequence: A B C
Output phase sequence: A B C

Centro de Mercadeo - Palmas del Mar * Y906PDM *
Interseccion semaforizada PR-906 y Palmas del Mar 2020
Intersection No.: 1
Cycle Time = 90

Table S.2 - MOVEMENT CAPACITY PARAMETERS

Mov No.	Arv Flow (veh /h)	Satn Flow 1st Grn	Satn Flow 2nd Grn	Flow Ratio 1st Grn	Flow Ratio 2nd Grn	Total Cap. (veh /h)	Prac. Deg. Satn xp	Prac. Spare Cap. (%)	Lane Util (%)	Deg. Satn x
South: Desde Candelero Abajo										
31 T	371	2742		0.135		427	0.90	3	100	0.870
33 R	18	1130	857	0.016	0.000	442	0.90	2112	100	0.041
East: Desde Palmas del Mar										
22 L	27	259		0.104		37	0.90	25	100	0.722
23 R	1118	2283	1893	0.004	0.586	1548	0.90	25	100	0.722
North: Desde PR-53 y PR-3										
42 L	1411	2605		0.542		1563	0.90	0	100	0.903*
41 T	460	1371		0.336		1082	0.90	112	47	0.425
Pedestrians										
24	6	20000		0.000		2667	0.90		100	0.002
44	6	20000		0.000		2444	0.90		100	0.002

Centro de Mercadeo - Palmas del Mar * Y906PDM *
Interseccion semaforizada PR-906 y Palmas del Mar 2020
Intersection No.: 1
Cycle Time = 90

Table S.3 - INTERSECTION PARAMETERS

Crit Mov No.	App. & Turn	Green Period	Phases Fr	Phases To	Adjusted Lost Time	Adjusted Flow Ratio	Required Grn Time Ratio	Required Movement Time
31	S_T		A	B	3	0.135	0.150	16.5
22	E_L		B	C	14	-	-	14.0Min
42	N_L		C	A	3	0.542	0.602	57.2
				Total:	20	0.677	0.752	87.7

- Flow ratio not used for cycle time calculations and the adjusted lost time equals the required movement time (=Min or Max as shown in Table S.1)

Cycle Time:

Minimum	Maximum	Practical	Chosen
38	180	81	90

Degree of Saturation (Highest) = 0.903
Practical Spare Capacity (Lowest) = 0 %
Total Vehicle Flow = 3405
Total Vehicle Capacity (all lanes) = 5100

Centro de Mercadeo - Palmas del Mar * Y906PDM *
Interseccion semaforizada PR-906 y Palmas del Mar 2020

Intersection No.: 1
Cycle Time = 90

Table S.4 - PHASE INFORMATION

hase No.	Change Time	Green Start	Displayed Green	Grn+Intgrn Secs	Prop.
A	0	4	13	17	0.189
B	17	21	12	16	0.178
C	33	37	53	57	0.633

Current Phase Sequence No.: 1
Input phase sequence: A B C
Output phase sequence: A B C

Intersection No.: 1
Cycle Time = 90

Table S.5 - MOVEMENT PERFORMANCE

Mov No.		Total Delay (veh-h/h)	Aver. Delay (sec)	Prop. Queued	Eff. Stop Rate	Longest Queue 95% Back (vehs)	(m)	Perf. Index	Aver. Speed (km/h)
South: Desde Candelero Abajo									
31	T	6.57	63.7	1.00	0.88	11.2	6	21.80	18.4
33	R	0.11	21.6	0.56	0.72	0.6	0	0.53	28.6
[illegible] Desde Palmas del Mar									
22	L	0.21	28.3	0.79	0.87	15.3	8	1.07	34.2
23	R	6.50	20.9	0.61	0.84	15.3	8	36.29	38.9
North: Desde PR-53 y PR-3									
42	L	14.87	37.9	0.94	0.96	35.2	18	88.35	40.7
41	T	0.41	3.2	0.34	0.30	8.0	4	13.02	60.6
Pedestrians									
24		0.06	33.8	0.86	0.87	0.1	0	0.10	21.3
44		0.06	34.7	0.87	0.88	0.1	0	0.10	21.0

Centro de Mercadeo - Palmas del Mar * Y906PDM *
Interseccion semaforizada PR-906 y Palmas del Mar 2020
Intersection No.: 1
Cycle Time = 90

Table S.6 - INTERSECTION PERFORMANCE

Total Flow (veh/h)	Total Delay (veh-h/h)	Aver. Delay (sec)	Prop. Queued	Eff. Stop Rate	Perf. Index	Aver. Speed (km/h)
South: Desde Candelero Abajo						
389	6.68	61.8	0.980	0.87	22.33	18.7
[illegible] Desde Palmas del Mar						
1145	6.71	21.1	0.615	0.84	37.36	38.8
North: Desde PR-53 y PR-3						
1871	15.29	29.4	0.797	0.80	101.37	44.2

Pedestrians						
12	0.11	34.2	0.872	0.87	0.20	21.1
ALL VEHICLES:						
3405	28.68	30.3	0.757	0.82	161.06	39.8
J RSECTION:						
.7	28.79	30.3	0.757	0.82	161.26	39.8

Centro de Mercadeo - Palmas del Mar * Y906PDM *
Interseccion semaforizada PR-906 y Palmas del Mar 2020
Intersection No.: 1
Cycle Time = 90

Table S.7 - LANE PERFORMANCE

Lane No.	Mov No.	Effective Green Times (sec) R1	G1	R2	G2	Arv Flow (veh /h)	Cap (veh /h)	Deg. Satn x	Aver. Delay (sec)	Eff. Stop Rate	Queue 95% Back (vehs)	Queue Back (m)	Shrt Lane (m)
South: Desde Candelero Abajo													
1 T	31	76	14	0	0	186	213	0.870	63.7	0.88	11.2	6	
2 T	31	76	14	0	0	186	213	0.870	63.7	0.88	11.2	6	
3 R	33	3	14	45	28	18	442	0.041	21.6	0.72	0.6	0	40
East: Desde Palmas del Mar													
1 LR	22, 23	37	3	3	47	462	639	0.722	28.3	0.88	15.3	8	
2 R	23	14	3	3	70	683	946	0.722	16.2	0.81	13.4	7	
th: Desde PR-53 y PR-3													
42	36	54	0	0	706	782	0.903	37.9	0.96	35.2	18	40	
2 L	42, 41	36	54	0	0	706	782	0.903	37.9	0.00	35.2	18	
3 T	41	19	71	0	0	460	1082	0.425	3.2	0.30	8.0	4	

Centro de Mercadeo - Palmas del Mar * Y906PDM *
Interseccion semaforizada PR-906 y Palmas del Mar 2020
Intersection No.: 1
Cycle Time = 90

Table S.8 - LANE FLOW AND CAPACITY INFORMATION

South: Desde Candelero Abajo

Effective Lane Use	Mov No.	Arv Flow (veh/h) Lef	Thru	Rig	Tot	Saturation Flow Basic (tcu)	Aver (veh) 1st	2nd	End Cap (veh /h)	Tot Cap (veh /h)	Deg. Satn x	Lane Util %
* ********** *	31	0	186	0	186	1371	1371	0	0	213	0.870	100
* ********** *	31	0	186	0	186	1371	1371	0	0	213	0.870	100
****** * *** *	33	0	0	18	18	1330	1130	857	40	442	0.041	100

East: Desde Palmas del Mar

Effective Lane Use	Mov No.	Arv Flow (veh/h) Lef	Thru	Rig	Tot	Saturation Flow Basic (tcu)	Aver 1st	Aver 2nd	End Cap (veh /h)	Tot Cap (veh /h)	Deg. Satn x	Lane Util %
******	22, 23	27	0	435	462	1371	1133	1152	40	639	0.722	100
******	23	0	0	683	683	1371	1200	1165	40*	946	0.722	100

North: Desde PR-53 y PR-3

Effective Lane Use	Mov No.	Arv Flow (veh/h) Lef	Thru	Rig	Tot	Saturation Flow Basic (tcu)	Aver 1st	Aver 2nd	End Cap (veh /h)	Tot Cap (veh /h)	Deg. Satn x	Lane Util %
******	42	706	0	0	706	1371	1303	0	0	782	0.903	100
**	42, 41	706	0	0	706	1371	1303	0	0	782	0.903	100
**********	41	0	460	0	460	1371	1371	0	0	1082	0.425	47 Prog

* Large end capacity has resulted in a saturation flow which is larger than the full unopposed saturation flow

Prog Lane under-utilisation found by the "Program"

Centro de Mercadeo - Palmas del Mar * Y906PDM *
Interseccion semaforizada PR-906 y Palmas del Mar 2020
Intersection No.: 1
Cycle Time = 90

Table S.9 - SIGNAL TIMING DIAGRAM

Displayed (Phase) Green Times

Phase A Phase B Phase C

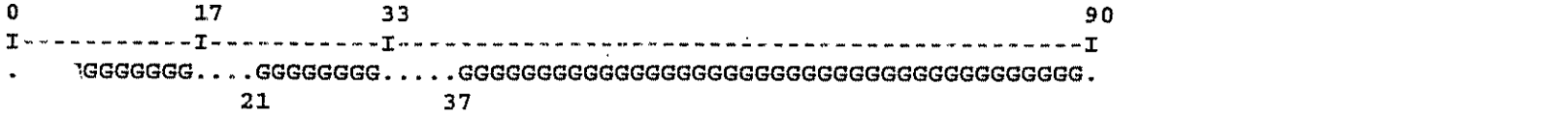

Effective (Movement) Green Times

South: Desde Candelero Abajo

```
Mov.   31 (T)
I           I           I                                                I
.....GGGGGGGGGG.........................................................
    6          20

I      33 (R)
I           I           I                                                I
GG...GGGGGGGGGG.................................GGGGGGGGGGGGGGGGGGGG
 3  6         20                                 65
```

East: Desde Palmas del Mar

```
Mov.   22 (L)
I           I           I                                                I
..................GGGGGGGGG.............................................
                23         36

Mov.   23 (R)
I           I           I                                                I
GG...........GG..GGGGGGGGGGGGGGGGGGGGGGGGGGGGGGGGGGGGGGGGGGGGGGGGGGGG
 3         17 20 23
```

North: Desde PR-53 y PR-3

```
Mov.   42 (L)
I           I           I                                                I
G.............................GGGGGGGGGGGGGGGGGGGGGGGGGGGGGGGGGGGGGGGG
 3                           39

Mov.   41 (T)
I           I           I                                                I
G   GGGGGGGGGGG...............GGGGGGGGGGGGGGGGGGGGGGGGGGGGGGGGGGGGGGGG
              20            39
```

Pedestrian Movements

```
Mov.   24
I           I           I                                                I
....GGGGGGGG.............................................................
   5         17

Mov.   44
I           I           I                                                I
.................GGGGGGGG.............................................
               22        33


I-----I------I------I------I------I------I------I------I------I------I---->
0      9     18     27     36     45     54     63     72     81     90

                                T I M E  (s)
```

Centro de Mercadeo - Palmas del Mar * Y906PDM *
Interseccion semaforizada PR-906 y Palmas del Mar 2020
Intersection No.: 1
Cycle Time = 90

Table S.12A - FUEL CONSUMPTION, EMISSIONS AND COST - TOTAL

Mov No.	Fuel Total L/h	Cost Total $/h	HC Total kg/h	CO Total kg/h	NOX Total kg/h	CO2 Total kg/h	Lead Total kg/h

South: Desde Candelero Abajo							
31 T	50.0	147.60	0.186	10.35	0.283	124.9	0.00000
33 R	2.4	5.93	0.007	0.43	0.013	6.0	0.00000
	52.3	153.53	0.194	10.79	0.296	130.9	0.00000
b. .c: Desde Palmas del Mar							
22 L	4.6	11.00	0.012	0.68	0.021	11.6	0.00000
23 R	191.2	427.47	0.495	28.76	0.881	478.1	0.00000
	195.9	438.47	0.507	29.44	0.902	489.7	0.00000
North: Desde PR-53 y PR-3							
42 L	383.1	879.54	0.861	42.46	1.436	957.8	0.00000
41 T	103.3	206.68	0.182	7.77	0.295	258.2	0.00000
	486.4	1086.22	1.042	50.23	1.731	1215.9	0.00000
Pedestrians							
24		0.71					
44		0.72					
		1.43					
ALL VEHICLES:	734.6	1678.22	1.743	90.45	2.929	1836.5	0.00000
INTERSECTION:	734.6	1679.66	1.743	90.45	2.929	1836.5	0.00000

Centro de Mercadeo - Palmas del Mar * Y906PDM *
Interseccion semaforizada PR-906 y Palmas del Mar 2020
Intersection No.: 1
Cycle Time = 90

Table S.12B - FUEL CONSUMPTION, EMISSIONS AND COST - RATE

Mov No.	Fuel Rate mL/km	Cost Rate c/km	HC Rate g/km	CO Rate g/km	NOX Rate g/km	CO2 Rate g/km	Lead Rate g/km
South: Desde Candelero Abajo							
31 T	295.2	87.21	1.102	61.18	1.672	737.9	0.00000
33 R	279.3	69.29	0.849	50.69	1.485	698.2	0.00000
	294.4	86.35	1.089	60.68	1.663	736.0	0.00000
East: Desde Palmas del Mar							
22 L	251.3	59.62	0.658	36.85	1.153	628.3	0.00000
23 R	253.2	56.60	0.655	38.07	1.166	633.0	0.00000
	253.2	56.67	0.655	38.05	1.166	632.9	0.00000
North: Desde PR-53 y PR-3							
42 L	229.8	52.77	0.516	25.47	0.861	574.6	0.00000
41 T	194.2	38.86	0.341	14.61	0.555	485.4	0.00000
	221.2	49.40	0.474	22.84	0.787	553.0	0.00000
F strians							
		39.41					
44		40.09					
		39.75					
ALL VEHICLES:	233.2	53.27	0.553	28.71	0.930	583.0	0.00000

INTERSECTION:	233.2	53.26	0.553	28.71	0.930	583.0 0.00000

Table S.15 - CAPACITY AND LEVEL OF SERVICE (HCM STYLE)

Mov No.	Mov Typ	Green Ratio 1st grn	Green Ratio 2nd grn	Time (g/C)	Total Flow (veh /h)	Total Cap. (veh /h)	Deg. of Satn (v/c)	Aver. Delay (sec)	LOS
South: Desde Candelero Abajo									
31	T	0.156*			371	427	0.870	63.7	E
33	R (Un2)	0.156	0.311		18	442	0.041	21.6	B
					389	869	0.870	61.8	E
East: Desde Palmas del Mar									
22	L	0.144*			27	37	0.722	28.3	B
23	R (Un1)	0.033	0.778		1118	1548	0.722	20.9	B
					1145	1586	0.722	21.1	B
North: Desde PR-53 y PR-3									
42	L	0.600*			1411	1563	0.903*	37.9	C
41	T	0.789			460	1082	0.425	3.2	A
					1871	2645	0.903	29.4	C
Pedestrians									
24	(Ped)	0.133			6	2667	0.002	33.8	D
44	(Ped)	0.122			6	2444	0.002	34.7	D
					12	5111	0.002	34.2	D
ALL VEHICLES:					3405	5100	0.903	30.3	C
INTERSECTION:					3417	5100	0.903	30.3	C

Level of Service calculations are based on delay (HCM criteria).
Intersection capacity is calculated considering vehicle movements only.
* Maximum v/c ratio, or critical green periods

Centro de Mercadeo - Palmas del Mar * Y906PDM *
Interseccion semaforizada PR-906 y Palmas del Mar 2020
Intersection No.: 1
Cycle Time = 90

Table D.0 - GEOMETRIC DELAY DATA

From Approach	To Approach	Negn Radius (m)	Negn Speed (km/h)	Negn Distance (m)
South: Desde Candelero Abajo				
	East	10	18	16
	North	S	64	24

East: Desde Palmas del Mar				
	South	18	24	28
	North	10	18	16
North: Desde PR-53 y PR-3				
	South	S	64	24
	East	16	23	25

Centro de Mercadeo - Palmas del Mar * Y906PDM *
Interseccion semaforizada PR-906 y Palmas del Mar 2020
Intersection No.: 1
Cycle Time = 90

Table D.1 - LANE DELAYS

Lane No.	Mov No.	Deg. Satn x	Delay (seconds/veh) Analytical Model 1st dm1	2nd dm2	Total dm	Acc. Dec. dn	Queu -ing dq	Ratio dm/ di	Stopd (Idle) di	Geom dg	Overall d
South: Desde Candelero Abajo											
1 T	31	0.870	37.1	26.6	63.7	10.7	53.0	1.23	51.7	0.0	63.7
2 T	31	0.870	37.1	26.6	63.7	10.7	53.0	1.23	51.7	0.0	63.7
3 R	33	0.041	11.5	0.0	11.5	2.5	20.5	0.56	20.5	10.1	21.6
East: Desde Palmas del Mar											
1 LR	22, 23	0.722	14.6	3.6	18.2	3.6	20.4	0.92	19.8	9.4 10.1	28.3
2 R	23	0.722	3.7	2.5	6.1	2.2	6.1	1.05	5.9	10.1	16.2
North: Desde PR-53 y PR-3											
	42	0.903	15.7	12.8	28.5	5.2	23.4	1.30	22.0	9.4	37.9
	42, 41	0.903	15.7	12.8	28.5	5.2	23.4	1.30	22.0	9.4 0.0	37.9
3 T	41	0.425	3.0	0.2	3.2	3.7	0.0	0.00	0.0	0.0	3.2

dn is average stop-start delay for all vehicles queued and unqueued

Centro de Mercadeo - Palmas del Mar * Y906PDM *
Interseccion semaforizada PR-906 y Palmas del Mar 2020
Intersection No.: 1
Cycle Time = 90

Table D.2 - LANE STOPS

Lane No.	Mov No.	Deg. Satn x	Effective Stop Rate he1	he2	Geom. hg	Overall h	Prop. Queued pq	Queue Move-up Rate hqm
South: Desde Candelero Abajo								
1 T	31	0.870	0.83	0.05	0.00	0.88	1.000	0.38
2 T	31	0.870	0.83	0.05	0.00	0.88	1.000	0.38
3 R	33	0.041	0.42	0.00	0.30	0.72	0.566	0.00
East: Desde Palmas del Mar								
1 LR	22, 23	0.722	0.71	0.03	0.14	0.88	0.798	0.38
2 R	23	0.722	0.45	0.01	0.35	0.81	0.492	0.13
North: Desde PR-53 y PR-3								
1 L	42	0.903	0.87	0.06	0.03	0.96	0.945	0.23
2 L	42,	0.903	0.87	0.06	0.03	0.96	0.945	0.23

	41							
3 T	41	0.425	0.30	0.00	0.00	0.30	0.343	0.00

hqm is average queue move-up rate for all vehicles queued and unqueued

Intersection No.: 1
Cycle Time = 90

Table D.3 - LANE QUEUES

Lane No.	Mov No.	Deg. Satn x	Ovrfl. Queue No	Average Nb1	Average Nb2	Average Nb	Percentile 90%	Percentile 95%	Percentile 98%	Queue Stor. Ratio
South: Desde Candelero Abajo										
1 T	31	0.870	0.5	5.2	0.7	5.8	9.7	11.2	12.7	0.02
2 T	31	0.870	0.5	5.2	0.7	5.8	9.7	11.2	12.7	0.02
3 R	33	0.041	0.0	0.3	0.0	0.3	0.5	0.6	0.8	0.01
East: Desde Palmas del Mar										
1 LR	22, 23	0.722	0.1	8.3	0.2	8.6	13.7	15.3	16.9	0.02
2 R	23	0.722	0.0	7.3	0.0	7.3	11.8	13.4	15.0	0.01
North: Desde PR-53 y PR-3										
1 L	42	0.903	3.4	16.7	5.1	21.8	32.9	35.2	37.5	0.44
2 L	42, 41	0.903	3.4	16.7	5.1	21.8	32.9	35.2	37.5	0.02
3 T	41	0.425	0.0	3.9	0.0	3.9	6.8	8.0	9.3	0.00

Values printed in this table are back of queue.

Centro de Mercadeo - Palmas del Mar * Y906PDM *
Interseccion semaforizada PR-906 y Palmas del Mar 2020
Intersection No.: 1
Cycle Time = 90

Table D.4 - MOVEMENT SPEEDS (km/h)

Mov No.	App. Speeds Cruise	App. Speeds Negn	Exit Speeds Negn	Exit Speeds Cruise	Queue Move-up 1st Grn	Queue Move-up 2nd Grn	Av. Section Spd Running	Av. Section Spd Overall
South: Desde Candelero Abajo								
31	64.0	64.0	64.0	64.0	6.3		43.6	18.4
33	64.0	18.0	18.0	64.0			43.5	28.6
East: Desde Palmas del Mar								
22	64.0	24.0	24.0	64.0	2.7		42.4	34.2
23	64.0	18.0	18.0	64.0	2.7	12.1	47.5	38.9
North: Desde PR-53 y PR-3								
42	64.0	23.0	23.0	64.0	12.1		51.6	40.7
1	64.0	64.0	64.0	64.0	14.3		60.6	60.6

Centro de Mercadeo - Palmas del Mar * Y906PDM *
Interseccion semaforizada PR-906 y Palmas del Mar 2020
Intersection No.: 1
Cycle Time = 90

Table D.5 - PROGRESSION FACTORS & ACTUATED SIGNAL PARAMETERS

Mov.	Control	Coord.	Arrival Type	Delay Prog. Factor	Queue Prog. Factor	Disp. Grn. Settings 1st Grn Gmin	1st Grn Gmax	2nd Grn Gmin	2nd Grn Gmax
South: Desde Candelero Abajo									
31	PT	No	3	1.000	1.000	6	NA		
33	PT	No	3	1.000	1.000	6	NA	6	NA
East: Desde Palmas del Mar									
22	PT	No	3	1.000	1.000	6	NA		
23	PT	No	3	1.000	1.000	6	NA	6	NA
North: Desde PR-53 y PR-3									
42	PT	No	3	1.000	1.000	6	NA		
41	PT	No	3	1.000	1.000	6	NA		
Pedestrians									
24	PT	No	3	1.000	1.000				
44	PT	No	3	1.000	1.000				

--- End of SIDRA Output ---

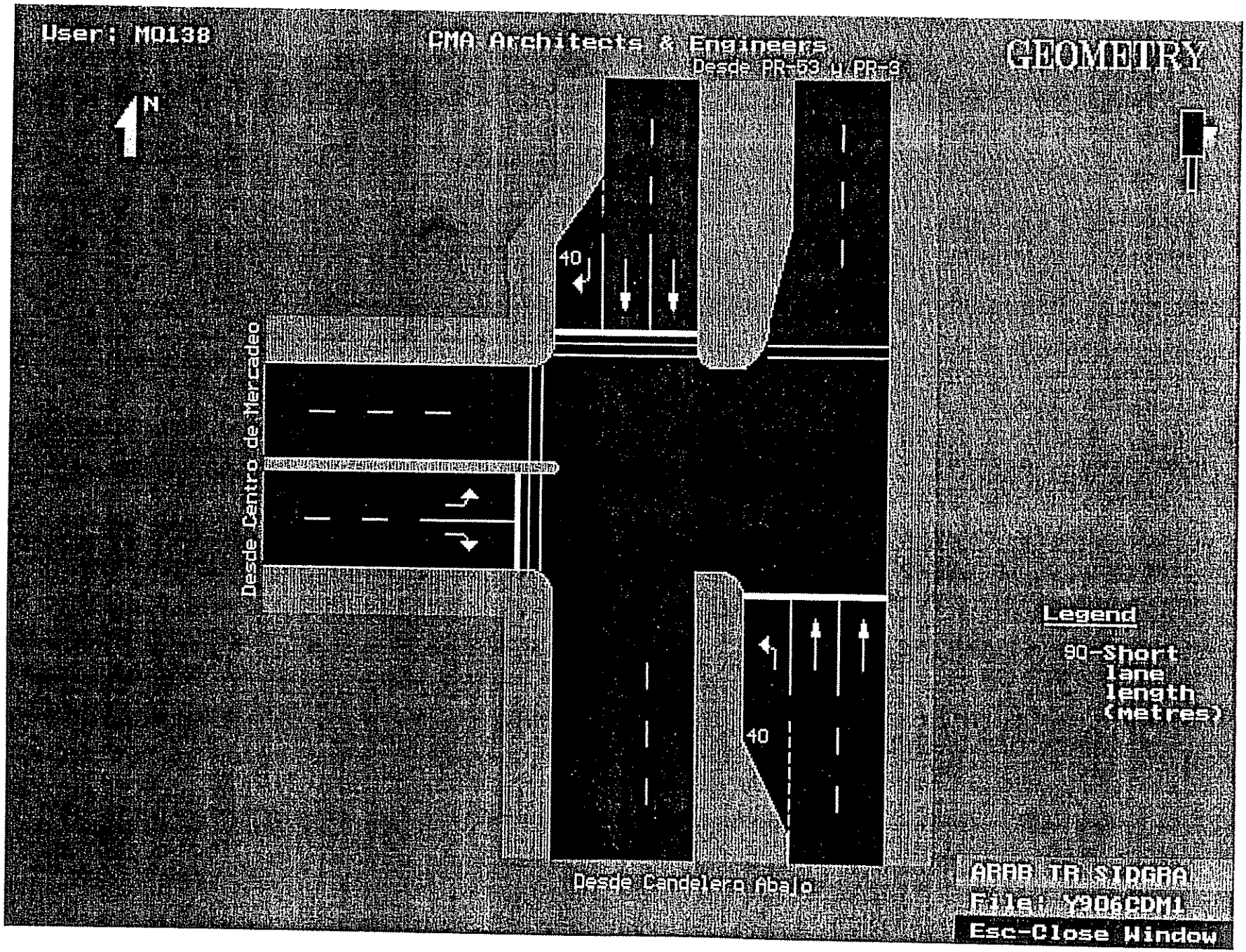
User: MO138
CMA Architects & Engineers
GEOMETRY
Desde PR-53 y PR-3
N
40
Desde Centro de Mercadeo
Legend
90-Short lane length (metres)
40
Desde Candelero Abajo
ARAB IR SIRGRA
File: Y906CDM1
Esc-Close Window

TRAFFIC ANALYSIS

GRAPHIC SUMMARY OF TRAFFIC FLOW

DATE _____ DAY _____ WEATHER _____ PERIOD 3PM TO 6PM

MUNICIPALITY Humacao URBAN ZONE ☐ RURAL ☐ SUB-URBAN ☒

INTERSECTION OF PR-906 WITH CENTRO COMERCIAL SUR

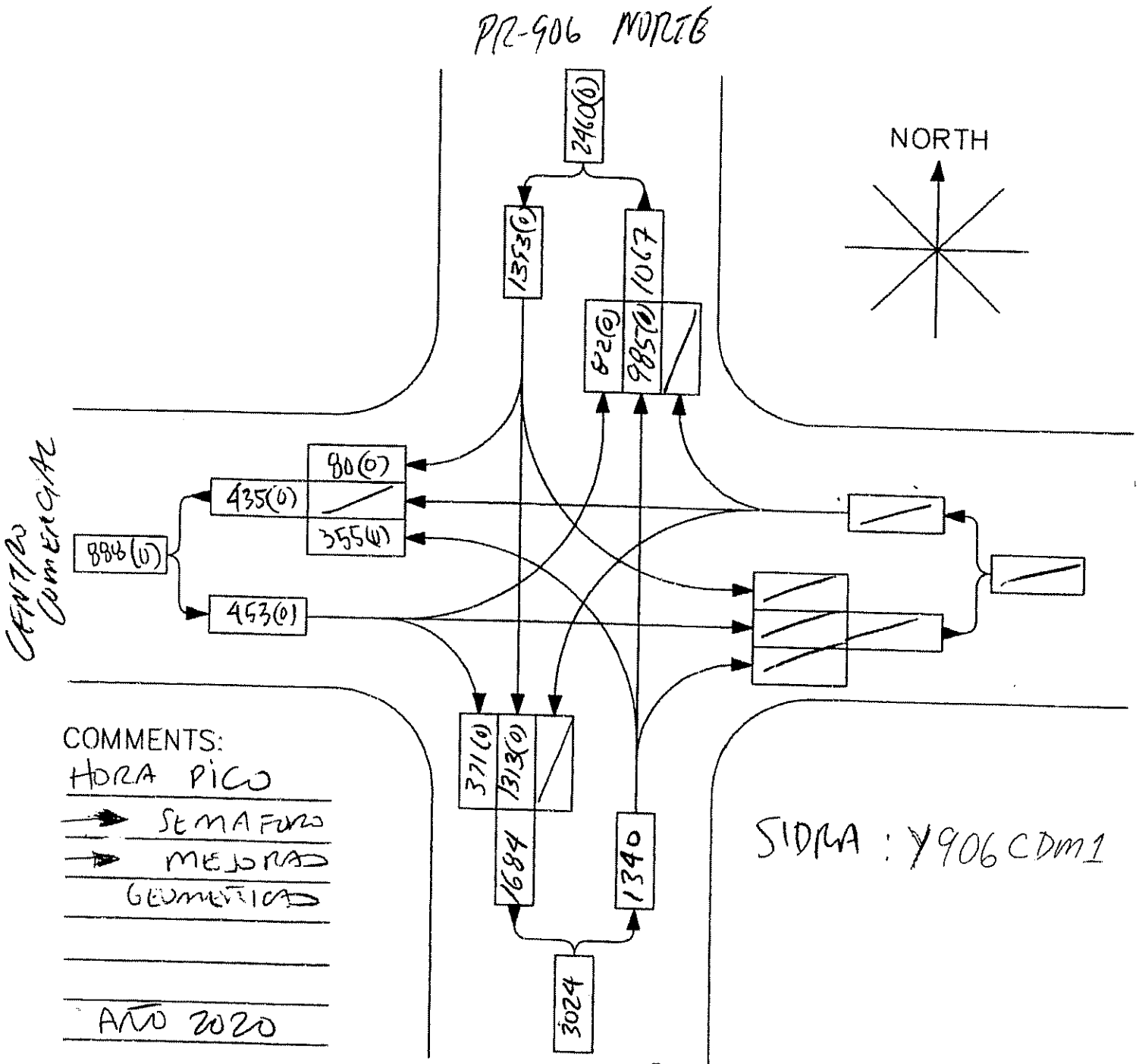

COMMENTS:

HORA PICO

→ SEMAFORO

→ MEJORAS GEOMETRICAS

AÑO 2020

SIDRA : Y906CDM1

ARRB Transport Research Ltd - SIDRA 5.02a

CMA ARCHITECTS & ENGINEERS
CIVIL Registered User No. M0138
Time and Date of Analysis 16:50:05 12/19/00

:o de Mercadeo - Palmas del Mar * Y906CDM1
rseccion semaforizada PR-906 y Centro de Mercadeo 2020
ersection No.: 1A

)RA US Highway Capacity Manual (1994) Version
Cycle Time = 160

****
* UNSETTLED RESULTS. SIDRA HAS NOT BEEN ABLE TO SOLVE THIS CASE, *
* PROBABLY DUE TO HIGH CONGESTION LEVELS. *
****

RUN INFORMATION

* Basic Parameters:
Intersection Type: Signalised - Pretimed
Driving on the right-hand side of the road
SIDRA US Highway Capacity Manual (1994) Version
Input data specified in Metric units
Default Values File No. 11
Peak flow period (for performance): 15 minutes
Unit time (for volumes): 60 minutes (Total Flow Period)
Delay definition: Overall delay,
Geometric delay included
Delay formula: Highway Capacity Manual
Level of Service based on: Delay (HCM)
\eue definition: Back of queue, 95th_Percentile

* No. of Main (Timing-Capacity) Iterations = 4 (Max)
The differences between main iterations indicate that this may be an unstable solution (see the information given below).
Use of the variable cycle time facility (LT 21) to check results for various cycle times can give a further idea about the stability of this case.
Comparison of last two iterations:
Difference in intersection degree of satn = 6.3 %
Difference in total vehicle capacity = 5.9 %
Largest difference in eff. green times = 68 secs
(max. value for stopping = 1 secs)
Information on Previous Iteration:
Cycle Time = 90
Phase Times: 0, 55, 75
Critical Movements: 41, 32, 13(2nd)

Centro de Mercadeo - Palmas del Mar * Y906CDM1
Interseccion semaforizada PR-906 y Centro de Mercadeo 2020
Intersection No.: 1A

PARAMETERS

Default values for some of the important general parameters:
(D ault Values File: DEF11.SDF)

1. Basic saturation flow: 1900 tcu/h

This value applies to signalised intersections and priority and continuous movements at roundabouts and unsignalised intersections. Saturation flows (capacities) for all opposed movements at roundabouts

and sign-controlled intersections are estimated from a gap-acceptance based model.

2. Through car equivalents for signalised intersections

	LEFT		THROUGH		RIGHT	
	LV	HV	LV	HV	LV	HV
Normal	1.053	2.000	1.000	2.000	1.176	2.000
Restricted	1.303	2.500			1.426	2.500

3. Opposed turn parameters (Signalised intersection)

	Crit. Gap	Fol.up Hdway	Deps at End	% Exit Flow Opposing
Left turns :	4.0	2.57	2.0	0
Right turns:	4.0	2.57	2.5	0

4. Cruise speed= 40 km/h, Approach Distance= 1500 m

5. Queue space per vehicle in metres
Light vehicles: 0.3 Heavy vehicles: 0.4

Centro de Mercadeo - Palmas del Mar * Y906CDM1
Interseccion semaforizada PR-906 y Centro de Mercadeo 2020
Intersection No.: 1A
Cycle Time = 160

Table S.0 - TRAFFIC FLOW DATA (Flows in veh/hour as used by the program)

Mov No.	Left LV	Left HV	Through LV	Through HV	Right LV	Right HV	Flow Scale	Peak Flow Factor
West: Desde Centro de Mercadeo								
12	91	0	0	0	0	0	1.00	0.90
13	0	0	0	0	412	0	1.00	0.90
South: Desde Candelero Abajo								
32	394	0	0	0	0	0	1.00	0.90
31	0	0	1094	0	0	0	1.00	0.90
North: Desde PR-53 y PR-3								
41	0	0	1459	0	0	0	1.00	0.90
43	0	0	0	0	89	0	1.00	0.90
PEDESTRIANS	Flow (ped/hour)							
14			6				1.00	0.90
44			6				1.00	0.90

Based on unit time = 60 minutes.
Flow Scale and Peak Hour Factor effects included in flow values.

Centro de Mercadeo - Palmas del Mar * Y906CDM1
Interseccion semaforizada PR-906 y Centro de Mercadeo 2020
Intersection No.: 1A
Cycle Time = 160

Table S.1 - MOVEMENT PHASE AND TIMING PARAMETERS

Mov No	Mov Typ	PHASE MATRIX First Green Fr	To	Op	Pr	Second Green Fr	To	Op	Pr	Lost Tim 1st Grn	Lost Tim 2nd Grn	Req.Mov.Time 1st Grn	Req.Mov.Time 2nd Grn	Eff. Grn 1st Grn	Eff. Grn 2nd Grn
West: Desde Centro de Mercadeo															
12	L		C	A						3		15.4		14	
13	R		A	C	R		*C	A		67	3	134.5	29.2	76	14

South: Desde Candelero Abajo										
32 L		B	C			3		34.9		34
31 T		*A	C			3		134.5		140
North: Desde PR-53 y PR-3										
1 T		A	B			3		97.6		103
, R		A	B	B	A R	3	30	17.0	20.0Min	103 24
Pedestrians										
14	(Ped)	A	B			4		13.0Min		102
44	(Ped)	B	A			5		20.0Min		49

Current Phase Sequence No.: 1
Input phase sequence: A B C
Output phase sequence: A B C

Centro de Mercadeo - Palmas del Mar * Y906CDM1
Interseccion semaforizada PR-906 y Centro de Mercadeo 2020
Intersection No.: 1A
Cycle Time = 160

Table S.2 - MOVEMENT CAPACITY PARAMETERS

Mov No.	Arv Flow (veh /h)	Satn Flow 1st Grn	Satn Flow 2nd Grn	Flow Ratio 1st Grn	Flow Ratio 2nd Grn	Total Cap. (veh /h)	Prac. Deg. Satn xp	Prac. Spare Cap. (%)	Lane Util (%)	Deg. Satn x
West: Desde Centro de Mercadeo										
12 L	91	1303		0.070		114	0.90	13	78	0.798
13 R	412	633	1165	0.380	0.147	403	0.90	-12	100	1.023*
h: Desde Candelero Abajo										
32 L	394	2193		0.180		466	0.90	6	100	0.845
31 T	1094	1479		0.740		1294	0.90	6	100	0.845
North: Desde PR-53 y PR-3										
41 T	1459	2742		0.532		1765	0.90	9	100	0.827
43 R	89	1130	991	0.079	0.000	876	0.90	786	100	0.102
Pedestrians										
14	6	20000		0.000		12750	0.90		100	0.000
44	6	20000		0.000		6125	0.90		100	0.001

Centro de Mercadeo - Palmas del Mar * Y906CDM1
Interseccion semaforizada PR-906 y Centro de Mercadeo 2020
Intersection No.: 1A
Cycle Time = 160

Table S.3 - INTERSECTION PARAMETERS

Crit Mov No.	App. & Turn	Green Period	Phases Fr	Phases To	Adjusted Lost Time	Adjusted Flow Ratio	Required Grn Time Ratio	Required Movement Time
31	S_T		A	C	3	0.740	0.822	134.5
13	W_R	2nd	C	A	3	0.147	0.164	29.2
				Total:	6	0.887	0.986	163.7

Cycle Time:
Minimum Maximum Practical Chosen

33 180 180 160

Degree of Saturation (Highest) = 1.023
Practical Spare Capacity (Lowest) = -12 %
Total Vehicle Flow = 3539
Total Vehicle Capacity (all lanes) = 4919

Centro de Mercadeo - Palmas del Mar * Y906CDM1
Interseccion semaforizada PR-906 y Centro de Mercadeo 2020
Intersection No.: 1A
Cycle Time = 160

Table S.4 - PHASE INFORMATION

Phase No.	Change Time	Green Start	Displayed Green	Grn+Intgrn Secs	Prop.
A	0	4	102	106	0.663
B	106	110	33	37	0.231
C	143	147	13	17	0.106

Current Phase Sequence No.: 1
Input phase sequence: A B C
Output phase sequence: A B C

Centro de Mercadeo - Palmas del Mar * Y906CDM1
Interseccion semaforizada PR-906 y Centro de Mercadeo 2020
Intersection No.: 1A
Cycle Time = 160

Table S.5 - MOVEMENT PERFORMANCE

Mv No.		Total Delay (veh-h/h)	Aver. Delay (sec)	Prop. Queued	Eff. Stop Rate	Longest Queue 95% Back (vehs)	(m)	Perf. Index	Aver. Speed (km/h)
West: Desde Centro de Mercadeo									
12	L	2.60	103.0	1.00	0.82	9.2	5	9.11	25.1
13	R	10.18	89.0	1.00	1.00	43.0	22	45.70	27.2
South: Desde Candelero Abajo									
32	L	9.50	86.8	1.00	0.89	21.0	11	33.47	15.0
31	T	4.70	15.5	0.56	0.53	36.7	18	40.95	40.4
North: Desde PR-53 y PR-3									
41	T	11.21	27.7	0.82	0.77	42.0	21	93.03	44.9
43	R	0.33	13.2	0.23	0.72	2.2	1	3.05	51.3
Pedestrians									
14		0.02	10.5	0.36	0.36	0.1	0	0.05	39.4
44		0.06	38.5	0.69	0.69	0.2	0	0.10	19.5

Centro de Mercadeo - Palmas del Mar * Y906CDM1
Interseccion semaforizada PR-906 y Centro de Mercadeo 2020
Intersection No.: 1A
Cycle Time = 160

Table S.6 - INTERSECTION PERFORMANCE

Total Flow (veh/h)	Total Delay (veh-h/h)	Aver. Delay (sec)	Prop. Queued	Eff. Stop Rate	Perf. Index	Aver. Speed (km/h)

West: Desde Centro de Mercadeo							
503	12.78	91.5	1.000	0.97	54.81	26.8	
South: Desde Candelero Abajo							
1488	14.20	34.3	0.678	0.63	74.42	27.6	
h: Desde PR-53 y PR-3							
28	11.54	26.8	0.795	0.77	96.08	45.2	
Pedestrians							
12	0.08	24.5	0.528	0.53	0.16	26.1	
ALL VEHICLES:							
3539	38.52	39.2	0.775	0.74	225.31	35.5	
INTERSECTION:							
3551	38.60	39.1	0.774	0.74	225.46	35.4	

Centro de Mercadeo - Palmas del Mar * Y906CDM1
Interseccion semaforizada PR-906 y Centro de Mercadeo 2020
Intersection No.: 1A
Cycle Time = 160

Table S.7 - LANE PERFORMANCE

Lane No.	Mov No.	Effective Green Times (sec) R1	G1	R2	G2	Arv Flow (veh /h)	Cap (veh /h)	Deg. Satn x	Aver. Delay (sec)	Eff. Stop Rate	Queue 95% Back (vehs)	(m)	Shrt Lane (m)
West: Desde Centro de Mercadeo													
	12	146	14	0	0	91	114	0.798	103.0	0.82	9.2	5	
	12, 13	67	76	3	14	412	402	1.024	89.0	1.00	43.0	22	
South: Desde Candelero Abajo													
1 L	32	126	34	0	0	227	268	0.845	89.1	0.89	19.7	10	40
2 LT	32, 31	124	36	0	0	247	292	0.845	83.6	0.89	21.0	11	
3 T	31	20	140	0	0	1014	1200	0.845	10.1	0.50	36.7	18	
North: Desde PR-53 y PR-3													
1 T	41	57	103	0	0	730	883	0.826	27.7	0.77	42.0	21	
2 T	41	57	103	0	0	730	883	0.826	27.7	0.77	42.0	21	
3 R	43	3	103	30	24	89	876	0.102	13.2	0.72	2.2	1	40

Centro de Mercadeo - Palmas del Mar * Y906CDM1
Interseccion semaforizada PR-906 y Centro de Mercadeo 2020
Intersection No.: 1A
Cycle Time = 160

Table S.8 - LANE FLOW AND CAPACITY INFORMATION

West: Desde Centro de Mercadeo

Effective I Use	Mov No.	Arv Flow (veh/h) Lef	Thru	Rig	Tot	Saturation Flow Basic (tcu)	Aver(veh) 1st	2nd	End Cap (veh /h)	Tot Cap (veh /h)	Deg. Satn x	Lane Util %
* *** * ******	12	91	0	0	91	1371	1303	0	0	114	0.798	78

Effective Lane Use	Mov No.	Arv Flow (veh/h) Lef	Thru	Rig	Tot	Saturation Flow Basic (tcu)	Aver 1st	(veh) 2nd	End Cap (veh /h)	Tot Cap (veh /h)	Deg. Satn x	Lane Util %	Prog
******	12, 13	0	0	412	412	1371	633	1165	23	402	1.024	100	

ıth: Desde Candelero Abajo

Effective Lane Use	Mov No.	Arv Flow (veh/h) Lef	Thru	Rig	Tot	Saturation Flow Basic (tcu)	Aver 1st	(veh) 2nd	End Cap (veh /h)	Tot Cap (veh /h)	Deg. Satn x	Lane Util %
******	32	227	0	0	227	1330	1264	0	0	268	0.845	100
****** ****	32, 31	167	80	0	247	1371	1298	0	0	292	0.845	100
**********	31	0	1014	0	1014	1371	1371	0	0	1200	0.845	100

North: Desde PR-53 y PR-3

Effective Lane Use	Mov No.	Arv Flow (veh/h) Lef	Thru	Rig	Tot	Saturation Flow Basic (tcu)	Aver 1st	(veh) 2nd	End Cap (veh /h)	Tot Cap (veh /h)	Deg. Satn x	Lane Util %
**********	41	0	730	0	730	1371	1371	0	0	883	0.826	100
**********	41	0	730	0	730	1371	1371	0	0	883	0.826	100
******	43	0	0	89	89	1330	1130	991	23	876	0.102	100

Prog Lane under-utilisation found by the "Program"

Centro de Mercadeo - Palmas del Mar * Y906CDM1
Interseccion semaforizada PR-906 y Centro de Mercadeo 2020
Intersection No.: 1A
Cycle Time = 160

Table S.9 - SIGNAL TIMING DIAGRAM

Displayed (Phase) Green Times

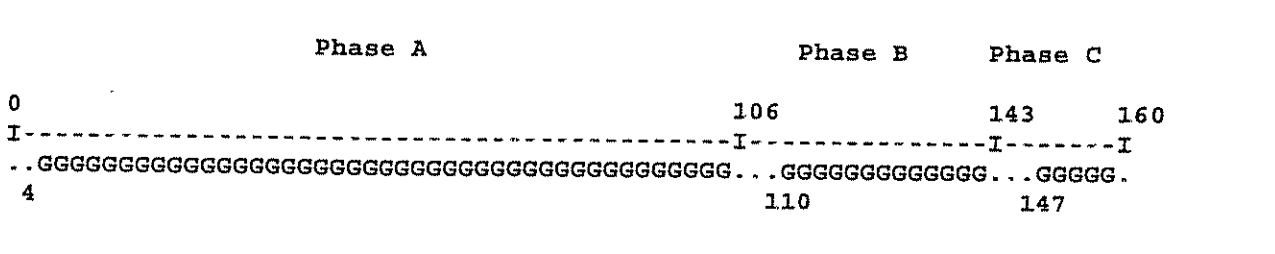

```
ective (Movement) Green Times

t: Desde Centro de Mercadeo

     12 (L)
                                                I                I       I
 ..............................................................GGGGG
                                                                 149

v.   13 (R)
                                                I                I       I
 ............................GGGGGGGGGGGGGGGGGGGGGGGGGGGGGGGG.GGGGGG
                            70                                146 149

South: Desde Candelero Abajo

Mov.   32 (L)
I                                               I                I       I
...............................................GGGGGGGGGGGGGG.......
                                                112             146

Mov.   31 (T)
I                                               I                I       I
...GGGGGGGGGGGGGGGGGGGGGGGGGGGGGGGGGGGGGGGGGGGGGGGGGGGGGGGGGGGGG.......
  6                                                               146

North: Desde PR-53 y PR-3

M      41 (T)
I                                               I                I       I
...GGGGGGGGGGGGGGGGGGGGGGGGGGGGGGGGGGGGGGGGGGGG.......................
  6                                               109

Mov.   43 (R)
I                                               I                I       I
G..GGGGGGGGGGGGGGGGGGGGGGGGGGGGGGGGGGGGGGGGGGGG.............GGGGGGGGGG
3 6                                             109           139

Pedestrian Movements

Mov.   14
I                                               I                I       I
..GGGGGGGGGGGGGGGGGGGGGGGGGGGGGGGGGGGGGGGGGGGG.......................
 5                                              107

Mov.   44
I                                               I                I       I
...............................................GGGGGGGGGGGGGGGGGGGGG
0                                                 111

I-----I------I------I------I------I------I------I------I------I------I---->
0     16     32     48     64     80     96    112    128    144    160

                                T I M E  (s)

Centro de Mercadeo - Palmas del Mar                                  * Y906CDM1
Interseccion semaforizada PR-906 y Centro de Mercadeo 2020
Intersection No.:    1A
                 Cycle Time = 160
```

Mov No.		Fuel Total L/h	Cost Total $/h	HC Total kg/h	CO Total kg/h	NOX Total kg/h	CO2 Total kg/h	Lead Total kg/h
West: Desde Centro de Mercadeo								
?	L	25.4	75.48	0.069	2.82	0.096	63.5	0.00000
3	R	114.8	325.07	0.304	13.01	0.435	286.9	0.00000
		140.2	400.55	0.372	15.84	0.531	350.4	0.00000
South: Desde Candelero Abajo								
32	L	55.6	197.91	0.207	9.93	0.296	139.0	0.00000
31	T	112.0	237.92	0.304	18.14	0.524	280.1	0.00000
		167.6	435.82	0.511	28.07	0.821	419.1	0.00000
North: Desde PR-53 y PR-3								
41	T	374.1	807.38	0.840	42.25	1.367	935.3	0.00000
43	R	23.7	49.57	0.050	2.59	0.087	59.2	0.00000
		397.8	856.94	0.890	44.84	1.454	994.5	0.00000
Pedestrians								
14			0.38					
44			0.78					
			1.16					
ALL VEHICLES:		705.6	1693.32	1.773	88.75	2.806	1764.0	0.00000
INTERSECTION:		705.6	1694.48	1.773	88.75	2.806	1764.0	0.00000

C\ :o de Mercadeo - Palmas del Mar * Y906CDM1
Interseccion semaforizada PR-906 y Centro de Mercadeo 2020
Intersection No.: 1A
Cycle Time = 160

Table S.12B - FUEL CONSUMPTION, EMISSIONS AND COST - RATE

Mov No.		Fuel Rate mL/km	Cost Rate c/km	HC Rate g/km	CO Rate g/km	NOX Rate g/km	CO2 Rate g/km	Lead Rate g/km
West: Desde Centro de Mercadeo								
12	L	236.0	70.10	0.638	26.21	0.891	590.0	0.00000
13	R	236.9	67.12	0.627	26.87	0.898	592.3	0.00000
		236.8	67.66	0.629	26.75	0.897	591.9	0.00000
South: Desde Candelero Abajo								
32	L	293.2	104.40	1.091	52.37	1.564	733.1	0.00000
31	T	224.5	47.67	0.610	36.35	1.051	561.3	0.00000
		243.4	63.29	0.742	40.76	1.192	608.6	0.00000
North: Desde PR-53 y PR-3								
41	T	221.8	47.86	0.498	25.05	0.810	554.5	0.00000
`	R	226.3	47.38	0.477	24.75	0.833	565.8	0.00000
		222.0	47.83	0.497	25.03	0.812	555.1	0.00000
Pedestrians								
14			21.30					
44			43.07					

		32:19					
ALL VEHICLES:	229.7	55.12	0.577	28.89	0.913	574.2	0.00000
INTERSECTION:	229.7	55.09	0.577	28.89	0.913	574.2	0.00000

Centro de Mercadeo - Palmas del Mar * Y906CDM1
Interseccion semaforizada PR-906 y Centro de Mercadeo 2020
Intersection No.: 1A
Cycle Time = 160

Table S.15 - CAPACITY AND LEVEL OF SERVICE (HCM STYLE)

Mov No.	Mov Typ	Green Ratio (g/C) 1st grn	Green Ratio (g/C) 2nd grn	Time Total Flow (veh /h)	Total Cap. (veh /h)	Deg. of Satn (v/c)	Aver. Delay (sec)	LOS
West: Desde Centro de Mercadeo								
12	L	0.087		91	114	0.798	103.0	F
13	R	0.475	0.087*	412	403	1.023*	89.0	F
				503	517	1.023	91.5	F
South: Desde Candelero Abajo								
32	L	0.213		394	466	0.845	86.8	F
31	T	0.875*		1094	1294	0.845	15.5	B
				1488	1760	0.845	34.3	C
N i: Desde PR-53 y PR-3								
41	T	0.644		1459	1765	0.827	27.7	C
43	R	0.644	0.150	89	876	0.102	13.2	A
				1548	2641	0.827	26.8	C
Pedestrians								
14	(Ped)	0.637		6	12750	0.000	10.5	B
44	(Ped)	0.306		6	6125	0.001	38.5	D
				12	18875	0.001	24.5	C
ALL VEHICLES:				3539	4919	1.023	39.2	D
INTERSECTION:				3551	4919	1.023	39.1	D

Level of Service calculations are based on delay (HCM criteria).
Intersection capacity is calculated considering vehicle movements only.
* Maximum v/c ratio, or critical green periods

Centro de Mercadeo - Palmas del Mar * Y906CDM1
Interseccion semaforizada PR-906 y Centro de Mercadeo 2020
Intersection No.: 1A
Cycle Time = 160

Ca D.0 - GEOMETRIC DELAY DATA

From Approach	To Approach	Negn Radius (m)	Negn Speed (km/h)	Negn Distance (m)

West: Desde Centro de Mercadeo				
	South	10	18	16
	North	17	23	27
South: Desde Candelero Abajo				
	West	15	22	24
	North	S	64	23
North: Desde PR-53 y PR-3				
	West	10	18	16
	South	S	64	23

Centro de Mercadeo - Palmas del Mar * Y906CDM1
Interseccion semaforizada PR-906 y Centro de Mercadeo 2020
Intersection No.: 1A
Cycle Time = 160

Table D.1 - LANE DELAYS

Lane No.	Mov No.	Deg. Satn x	Delay (seconds/veh) Analytical 1st dm1	Analytical 2nd dm2	Model Total dm	Acc. Dec. dn	Queu -ing dq	Ratio dm/ di	Stopd (Idle) di	Geom dg	Overall d
West: Desde Centro de Mercadeo											
1 L	12	0.798	71.6	21.7	93.3	5.5	87.9	1.07	87.3	9.6	103.0
2 R	12, 13	1.024	25.4	53.5	78.9	4.5	74.7	1.08	72.7	0.0 10.1	89.0
South: Desde Candelero Abajo											
1 L	32	0.845	60.5	19.0	79.4	5.3	74.2	1.08	73.3	9.7	89.1
T	32, 31	0.845	59.3	17.7	77.1	7.0	70.0	1.11	69.2	9.7 0.0	83.6
3 T	31	0.845	4.8	5.3	10.1	5.6	4.4	2.27	4.4	0.0	10.1
North: Desde PR-53 y PR-3											
1 T	41	0.826	21.7	6.0	27.7	8.9	18.8	1.47	18.8	0.0	27.7
2 T	41	0.826	21.7	6.0	27.7	8.9	18.8	1.47	18.8	0.0	27.7
3 R	43	0.102	3.1	0.0	3.1	1.1	5.1	0.61	5.1	10.1	13.2

dn is average stop-start delay for all vehicles queued and unqueued

Centro de Mercadeo - Palmas del Mar * Y906CDM1
Interseccion semaforizada PR-906 y Centro de Mercadeo 2020
Intersection No.: 1A
Cycle Time = 160

Table D.2 - LANE STOPS

Lane No.	Mov No.	Deg. Satn x	Effective Stop Rate he1	he2	Geom. hg	Overall h	Prop. Queued pq	Queue Move-up Rate hqm
West: Desde Centro de Mercadeo								
1 L	12	0.798	0.79	0.02	0.00	0.82	1.000	0.17
	12, 13	1.024	0.92	0.08	0.00	1.00	1.000	0.41
South: Desde Candelero Abajo								
1 L	32	0.845	0.85	0.03	0.00	0.89	1.000	0.17
2 LT	32, 31	0.845	0.86	0.03	0.00	0.89	1.000	0.16

3 T	31	0.845	0.50	0.00	0.00	0.50	0.527	0.00
North: Desde PR-53 y PR-3								
1 T	41	0.826	0.77	0.00	0.00	0.77	0.829	0.00
2 T	41	0.826	0.77	0.00	0.00	0.77	0.829	0.00
3 R	43	0.102	0.19	0.00	0.53	0.72	0.238	0.00

qm is average queue move-up rate for all vehicles queued and unqueued

Centro de Mercadeo - Palmas del Mar * Y906CDM1
Interseccion semaforizada PR-906 y Centro de Mercadeo 2020
Intersection No.: 1A
Cycle Time = 160

Table D.3 - LANE QUEUES

Lane No.	Mov No.	Deg. Satn x	Ovrfl. Queue No	Average Nb1	Average Nb2	Average Nb	Percentile 90%	Percentile 95%	Percentile 98%	Queue Stor. Ratio
West: Desde Centro de Mercadeo										
1 L	12	0.798	0.1	4.5	0.1	4.6	7.8	9.2	10.6	0.00
2 R	12, 13	1.024	6.9	18.0	8.8	26.8	40.3	43.0	45.8	0.02
South: Desde Candelero Abajo										
1 L	32	0.845	0.6	10.6	0.9	11.6	17.9	19.7	21.4	0.25
2 LT	32, 31	0.845	0.7	11.5	1.0	12.5	19.3	21.0	22.8	0.04
3 T	31	0.845	0.0	22.8	0.0	22.8	34.3	36.7	39.1	0.06
th: Desde PR-53 y PR-3										
- -	41	0.826	0.0	26.2	0.0	26.2	39.3	42.0	44.7	0.02
2 T	41	0.826	0.0	26.2	0.0	26.2	39.3	42.0	44.7	0.02
3 R	43	0.102	0.0	0.9	0.0	0.9	1.8	2.2	2.7	0.03

Values printed in this table are back of queue.

Centro de Mercadeo - Palmas del Mar * Y906CDM1
Interseccion semaforizada PR-906 y Centro de Mercadeo 2020
Intersection No.: 1A
Cycle Time = 160

Table D.4 - MOVEMENT SPEEDS (km/h)

Mov No.	App. Speeds Cruise	App. Speeds Negn	Exit Speeds Negn	Exit Speeds Cruise	Queue Move-up 1st Grn	Queue Move-up 2nd Grn	Av. Section Spd Running	Av. Section Spd Overall
West: Desde Centro de Mercadeo								
12	64.0	23.0	23.0	64.0	6.2		51.8	25.1
13	64.0	18.0	18.0	64.0	10.0	5.8	51.2	27.2
South: Desde Candelero Abajo								
32	64.0	22.0	22.0	64.0	9.7		40.4	15.0
	64.0	64.0	64.0	64.0	19.3		51.7	40.4
North: Desde PR-53 y PR-3								
41	64.0	64.0	64.0	64.0			56.3	44.9
43	64.0	18.0	18.0	64.0			54.7	51.3

Centro de Mercadeo - Palmas del Mar * Y906CDM1

Interseccion semaforizada PR-906 y Centro de Mercadeo 2020
Intersection No.: 1A
Cycle Time = 160

Table D.5 - PROGRESSION FACTORS & ACTUATED SIGNAL PARAMETERS

Mov No.	Control	Coord.	Arrival Type	Delay Prog. Factor	Queue Prog. Factor	Disp. Grn. Settings 1st Grn Gmin	1st Grn Gmax	2nd Grn Gmin	2nd Grn Gmax
West: Desde Centro de Mercadeo									
12	PT	Yes	4	1.000	0.993	6	NA		
13	PT	No	3	1.000	1.000	6	NA	6	NA
South: Desde Candelero Abajo									
32	PT	No	3	1.000	1.000	6	NA		
31	PT	No	3	1.000	1.000	6	NA		
North: Desde PR-53 y PR-3									
41	PT	No	3	1.000	1.000	6	NA		
43	PT	No	3	1.000	1.000	6	NA	6	NA
Pedestrians									
14	PT	No	3	1.000	1.000				
44	PT	No	3	1.000	1.000				

--- End of SIDRA Output ---

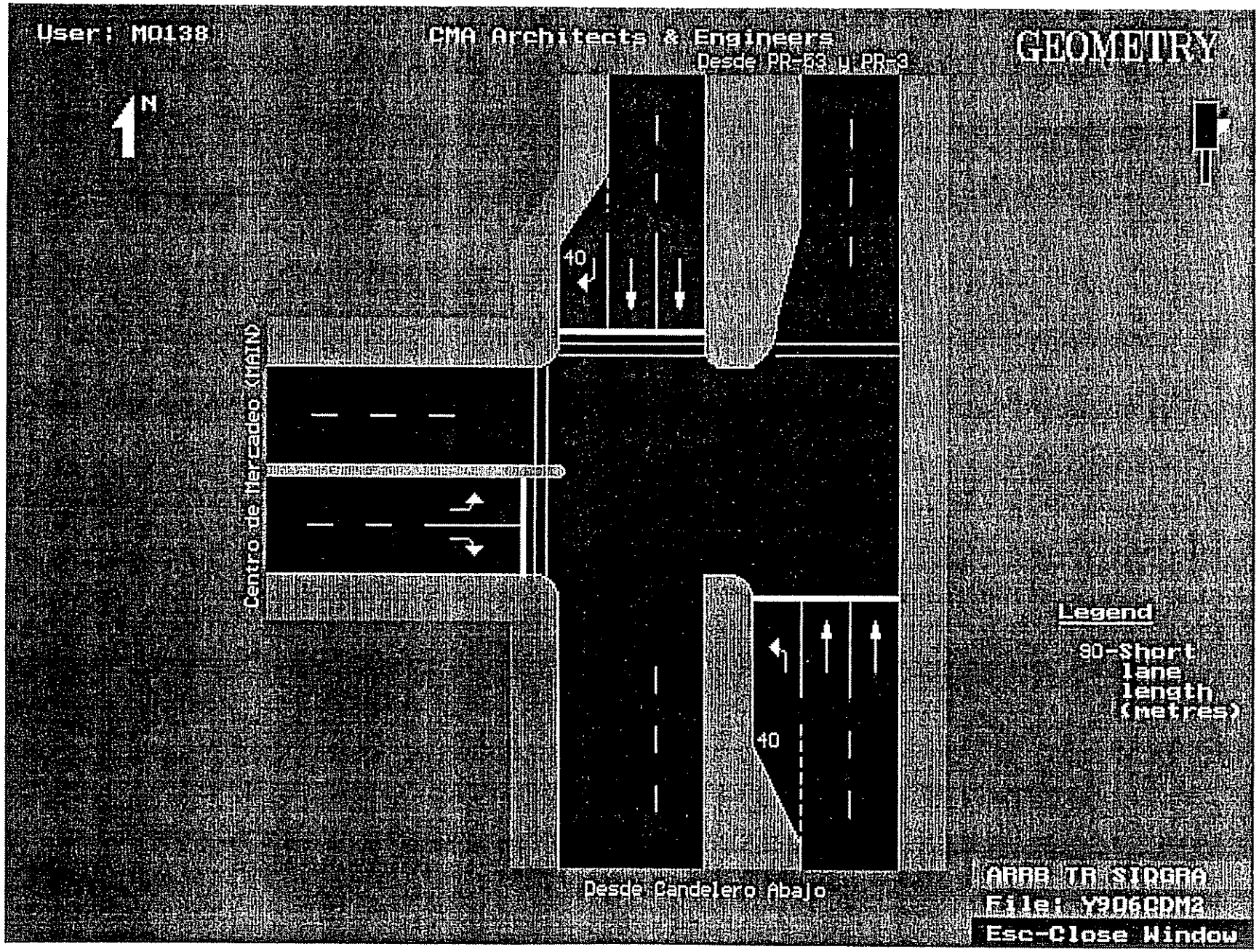
User: MO138
CMA Architects & Engineers
GEOMETRY
Desde PR-F3 y PR-3
N
40
Centro de Mercadeo (MAIN)
Legend
90-Short lane length (metres)
40
Desde Candelero Abajo
ARRB TR SIDRA
File: Y9D6CDM2
Esc-Close Window

TRAFFIC ANALYSIS

GRAPHIC SUMMARY OF TRAFFIC FLOW

DATE _____ DAY _____ WEATHER _____ PERIOD 3PM TO 6PM

MUNICIPALITY HUMACAO URBAN ZONE ☐ RURAL ☐ SUB-URBAN ☒

INTERSECTION OF PR-906 WITH CENTRO COMERCIAL CENTRO

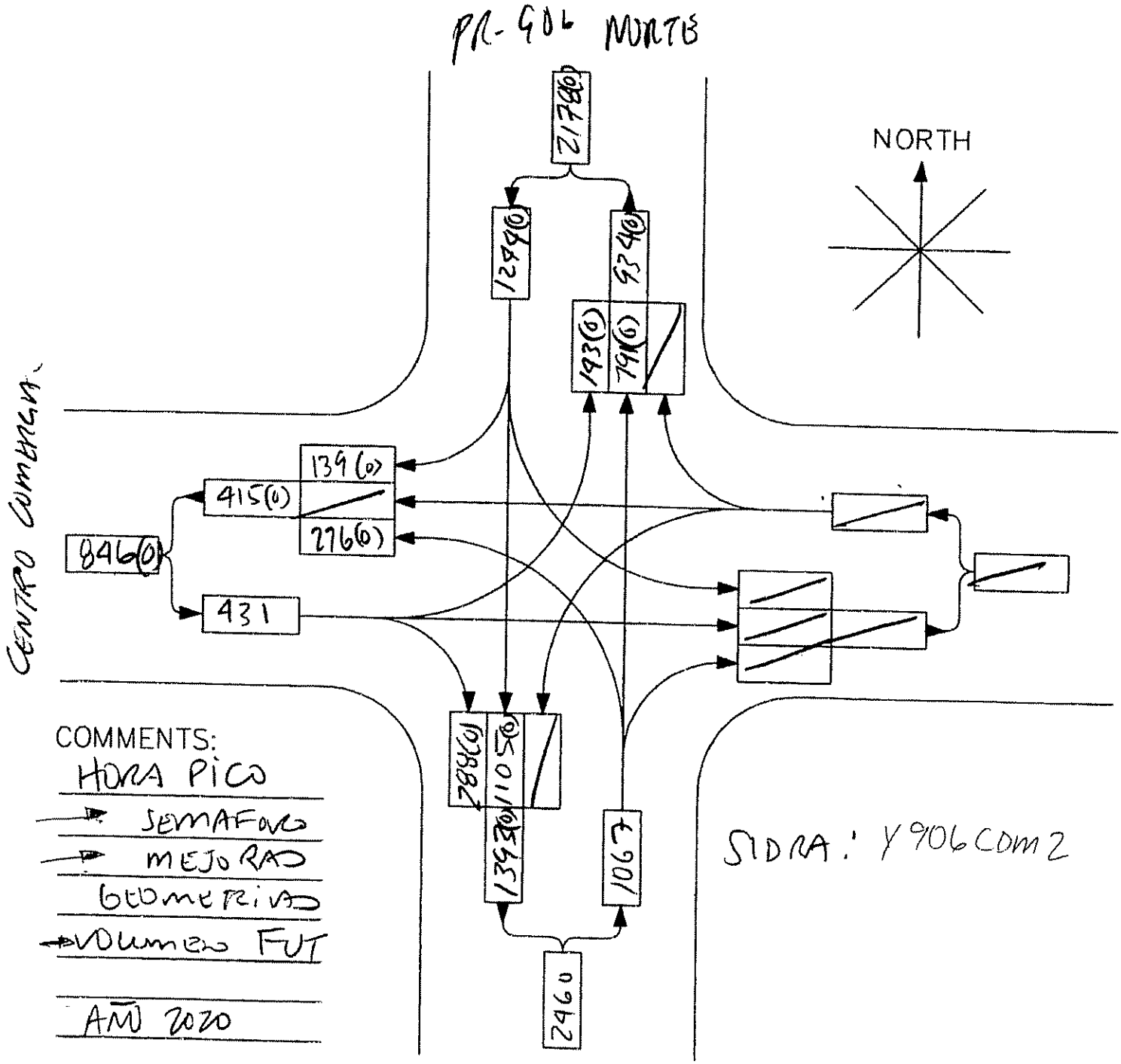

COMMENTS:

HORA PICO

→ SEMAFORO

→ MEJORADO

GEOMETRIA

→ VOLUMEN FUT

AÑO 2020

SIDRA: Y906COM2

ARRB Transport Research Ltd - SIDRA 5.02a

CMA ARCHITECTS & ENGINEERS
CIVIL Registered User No. M0138
Time and Date of Analysis 16:56:21 12/19/00

Centro de Mercadeo - Palmas del Mar * Y906CDM2
Interseccion semaforizada PR-906 y Centro de Mercadeo (MAIN) 2020
Intersection No.: 1B

SIDRA US Highway Capacity Manual (1994) Version
Cycle Time = 50

RUN INFORMATION

* Basic Parameters:
Intersection Type: Signalised - Pretimed
Driving on the right-hand side of the road
SIDRA US Highway Capacity Manual (1994) Version
Input data specified in Metric units
Default Values File No. 11
Peak flow period (for performance): 15 minutes
Unit time (for volumes): 60 minutes (Total Flow Period)
Delay definition: Overall delay,
Geometric delay included
Delay formula: Highway Capacity Manual
Level of Service based on: Delay (HCM)
Queue definition: Back of queue, 95th_Percentile

* No. of Main (Timing-Capacity) Iterations = 5
Comparison of last two iterations:
Difference in intersection degree of satn = 0.0 %
Difference in total vehicle capacity = 0.0 %
Largest difference in eff. green times = 0 secs
(max. value for stopping = 0 secs)

Centro de Mercadeo - Palmas del Mar * Y906CDM2
Interseccion semaforizada PR-906 y Centro de Mercadeo (MAIN) 2020
Intersection No.: 1B

PARAMETERS

Default values for some of the important general parameters:
(Default Values File: DEF11.SDF)

1. Basic saturation flow: 1900 tcu/h

This value applies to signalised intersections and priority and continuous movements at roundabouts and unsignalised intersections. Saturation flows (capacities) for all opposed movements at roundabouts and sign-controlled intersections are estimated from a gap-acceptance based model.

2. Through car equivalents for signalised intersections

	LEFT		THROUGH		RIGHT	
	LV	HV	LV	HV	LV	HV
Normal	1.053	2.000	1.000	2.000	1.176	2.000
Restricted	1.303	2.500			1.426	2.500

3. Opposed turn parameters (Signalised intersection)

	Crit. Gap	Fol.up Hdway	Deps at End	% Exit Flow Opposing
Left turns :	4.0	2.57	2.0	0

Right turns: 4.0 2.57 2.5 0

4. Cruise speed= 40 km/h, Approach Distance= 1500 m

5. Queue space per vehicle in metres
Light vehicles: 0.3 Heavy vehicles: 0.4

Centro de Mercadeo - Palmas del Mar * Y906CDM2
Interseccion semaforizada PR-906 y Centro de Mercadeo (MAIN) 2020
Intersection No.: 1B
Cycle Time = 50

Table S.0 - TRAFFIC FLOW DATA (Flows in veh/hour as used by the program)

Mov No.	Left		Through		Right		Flow Scale	Peak Flow Factor
	LV	HV	LV	HV	LV	HV		
West: Centro de Mercadeo (MAIN)								
12	159	0	0	0	0	0	1.00	0.90
13	0	0	0	0	320	0	1.00	0.90
South: Desde Candelero Abajo								
32	307	0	0	0	0	0	1.00	0.90
31	0	0	879	0	0	0	1.00	0.90
North: Desde PR-53 y PR-3								
41	0	0	1228	0	0	0	1.00	0.90
43	0	0	0	0	154	0	1.00	0.90
PEDESTRIANS	Flow (ped/hour)							
14		6					1.00	0.90
44		6					1.00	0.90

Based on unit time = 60 minutes.
Flow Scale and Peak Hour Factor effects included in flow values.

Centro de Mercadeo - Palmas del Mar * Y906CDM2
Interseccion semaforizada PR-906 y Centro de Mercadeo (MAIN) 2020
Intersection No.: 1B
Cycle Time = 50

Table S.1 - MOVEMENT PHASE AND TIMING PARAMETERS

Mov No.	Mov Typ	PHASE MATRIX First Green Fr	To	Op	Pr	Second Green Fr	To	Op	Pr	Lost Tim 1st Grn	Lost Tim 2nd Grn	Req.Mov.Time 1st Grn	Req.Mov.Time 2nd Grn	Eff. Grn 1st Grn	Eff. Grn 2nd Grn
West: Centro de Mercadeo (MAIN)															
12	L	C	A							3		10.0Min		7	
13	R	A	C	R		*C	A			22	3	34.2	10.0Min	18	7
South: Desde Candelero Abajo															
32	L	*B	C							3		10.2		8	
31	T	A	C							3		36.5		37	
North: Desde PR-53 y PR-3															
	T	*A	B							3		27.9		26	
	R	A	B			B	A	R		3	9	13.0Min	20.0Min	26	12
Pedestrians															
14	(Ped)	A	B							4		13.0Min		25	
44	(Ped)	B	A							5		20.0Min		16	

Current Phase Sequence No.: 1
Input phase sequence: A B C
Output phase sequence: A B C

Centro de Mercadeo - Palmas del Mar * Y906CDM2
Interseccion semaforizada PR-906 y Centro de Mercadeo (MAIN) 2020
Intersection No.: 1B
Cycle Time = 50

Table S.2 - MOVEMENT CAPACITY PARAMETERS

Mov No.	Arv Flow (veh /h)	Satn Flow 1st Grn	Satn Flow 2nd Grn	Flow Ratio 1st Grn	Flow Ratio 2nd Grn	Total Cap. (veh /h)	Prac. Deg. Satn xp	Prac. Spare Cap. (%)	Lane Util (%)	Deg. Satn x
West: Centro de Mercadeo (MAIN)										
12 L	159	1317		0.121		184	0.90	4	100	0.862*
13 R	320	788	1165	0.220	0.126	447	0.90	26	83	0.716
South: Desde Candelero Abajo										
32 L	307	2353		0.130		376	0.90	10	100	0.815
31 T	879	1456		0.604		1077	0.90	10	100	0.816
North: Desde PR-53 y PR-3										
41 T	1228	2742		0.448		1426	0.90	4	100	0.861
43 R	154	1130	1067	0.136	0.000	844	0.90	393	100	0.183
Pedestrians										
14	6	20000		0.000		10000	0.90		100	0.001
44	6	20000		0.000		6400	0.90		100	0.001

C ro de Mercadeo - Palmas del Mar * Y906CDM2
Interseccion semaforizada PR-906 y Centro de Mercadeo (MAIN) 2020
Intersection No.: 1B
Cycle Time = 50

Table S.3 - INTERSECTION PARAMETERS

Crit Mov No.	App. & Turn	Green Period	Phases Fr	Phases To	Adjusted Lost Time	Adjusted Flow Ratio	Required Grn Time Ratio	Required Movement Time
41	N_T		A	B	3	0.448	0.498	27.9
32	S_L		B	C	3	0.130	0.145	10.2
13	W_R	2nd	C	A	10	-	-	10.0Min
				Total:	16	0.578	0.643	48.1

- Flow ratio not used for cycle time calculations and the adjusted lost time equals the required movement time (=Min or Max as shown in Table S.1)

Cycle Time:

Minimum	Maximum	Practical	Chosen
33	180	45	50

Degree of Saturation (Highest) = 0.862
Practical Spare Capacity (Lowest) = 4 %
Total Vehicle Flow = 3047
Total Vehicle Capacity (all lanes) = 4355

Centro de Mercadeo - Palmas del Mar * Y906CDM2
Interseccion semaforizada PR-906 y Centro de Mercadeo (MAIN) 2020

Intersection No.: 1B
Cycle Time = 50

Table S.4 - PHASE INFORMATION

hase No.	Change Time	Green Start	Displayed Green	Grn+Intgrn Secs	Prop.
A	0	4	25	29	0.580
B	29	33	7	11	0.220
C	40	44	6	10	0.200

Current Phase Sequence No.: 1
Input phase sequence: A B C
Output phase sequence: A B C

Centro de Mercadeo - Palmas del Mar * Y906CDM2
Interseccion semaforizada PR-906 y Centro de Mercadeo (MAIN) 2020
Intersection No.: 1B
Cycle Time = 50

Table S.5 - MOVEMENT PERFORMANCE

Mov No.		Total Delay (veh-h/h)	Aver. Delay (sec)	Prop. Queued	Eff. Stop Rate	Longest Queue 95% Back (vehs)	(m)	Perf. Index	Aver. Speed (km/h)
West: Centro de Mercadeo (MAIN)									
12	L	2.36	53.4	1.00	0.86	6.2	3	8.54	35.5
13	R	2.07	23.2	0.87	0.87	8.8	4	13.10	47.3
S h: Desde Candelero Abajo									
2	L	3.99	46.8	1.00	0.87	7.2	4	12.49	23.1
31	T	2.71	11.1	0.72	0.70	18.4	9	22.30	45.2
North: Desde PR-53 y PR-3									
41	T	6.84	20.0	0.93	0.90	18.7	9	53.91	48.9
43	R	0.48	11.2	0.29	0.73	1.3	1	4.15	54.1
Pedestrians									
14		0.01	6.3	0.50	0.50	0.0	0	0.05	46.7
44		0.02	11.6	0.68	0.68	0.1	0	0.06	38.0

Centro de Mercadeo - Palmas del Mar * Y906CDM2
Interseccion semaforizada PR-906 y Centro de Mercadeo (MAIN) 2020
Intersection No.: 1B
Cycle Time = 50

Table S.6 - INTERSECTION PERFORMANCE

Total Flow (veh/h)	Total Delay (veh-h/h)	Aver. Delay (sec)	Prop. Queued	Eff. Stop Rate	Perf. Index	Aver. Speed (km/h)
West: Centro de Mercadeo (MAIN)						
479	4.43	33.3	0.919	0.87	21.65	42.6
S : Desde Candelero Abajo						
1186	6.70	20.3	0.798	0.74	34.80	35.9
North: Desde PR-53 y PR-3						
1382	7.32	19.1	0.863	0.88	58.06	49.5

...estrians						
...2	0.03	8.9	0.590	0.59	0.11	41.9
...EHICLES:						
...7	18.44	21.8	0.846	0.82	114.50	44.6
...RSECTION:						
...9	18.47	21.7	0.845	0.82	114.61	44.6

...tro de Mercadeo - Palmas del Mar * Y906CDM2
...terseccion semaforizada PR-906 y Centro de Mercadeo (MAIN) 2020
...tersection No.: 1B
Cycle Time = 50

...able S.7 - LANE PERFORMANCE

Lane No.	Mov No.	Effective Green Times (sec) R1	G1	R2	G2	Arv Flow (veh /h)	Cap (veh /h)	Deg. Satn x	Aver. Delay (sec)	Eff. Stop Rate	Queue 95% Back (vehs)	Queue Back (m)	Shrt Lane (m)
West: Centro de Mercadeo (MAIN)													
1 L	12, 13	43	7	0	0	159	184	0.862	53.4	0.00	6.2	3	
2 R	13	22	18	3	7	320	447	0.716	23.2	0.87	8.8	4	
South: Desde Candelero Abajo													
1 L	32	42	8	0	0	165	202	0.816	49.4	0.86	6.3	3	40
2 LT	32, 31	41	9	0	0	194	237	0.816	43.9	0.87	7.2	4	
3 T	31	13	37	0	0	828	1015	0.816	9.1	0.69	18.4	9	
...th: Desde PR-53 y PR-3													
1 T	41	24	26	0	0	614	713	0.861	20.0	0.90	18.7	9	
2 T	41	24	26	0	0	614	713	0.861	20.0	0.90	18.7	9	
3 R	43	3	26	9	12	154	844	0.182	11.2	0.73	1.3	1	40

Centro de Mercadeo - Palmas del Mar * Y906CDM2
Interseccion semaforizada PR-906 y Centro de Mercadeo (MAIN) 2020
Intersection No.: 1B
Cycle Time = 50

Table S.8 - LANE FLOW AND CAPACITY INFORMATION

Effective Lane Use	Mov No.	Arv Flow (veh/h) Lef	Thru	Rig	Tot	Saturation Flow Basic (tcu)	Aver 1st	Aver 2nd	End Cap (veh)	Tot Cap (veh /h)	Deg. Satn x	Lane Util %
West: Centro de Mercadeo (MAIN)												
* *** * ******	12, 13	159	0	0	159	1371	1317	0	0	184	0.862	100
* ** * *** *	13	0	0	320	320	1371	788	1165	72	447	0.716	83 Prog
South: Desde Candelero Abajo												

Effective Lane Use	Mov No.	Arv Flow (veh/h) Lef	Thru	Rig	Tot	Basic (tcu)	Aver(veh) 1st	2nd	Cap (veh /h)	Cap (veh /h)	Deg. Satn x	Lane Util %
* *** * ** **	32	165	0	0	165	1330	1264	0	0	202	0.816	100
* *** * * ****** **** *	32, 31	142	51	0	194	1371	1319	0	0	237	0.816	100
* ********** *	31	0	828	0	828	1371	1371	0	0	1015	0.816	100

North: Desde PR-53 y PR-3

Effective Lane Use	Mov No.	Arv Flow (veh/h) Lef	Thru	Rig	Tot	Saturation Flow Basic (tcu)	Aver(veh) 1st	2nd	End Cap (veh /h)	Tot Cap (veh /h)	Deg. Satn x	Lane Util %
* ********** *	41	0	614	0	614	1371	1371	0	0	713	0.861	100
* ********** *	41	0	614	0	614	1371	1371	0	0	713	0.861	100
* * * *** *	43	0	0	154	154	1330	1130	1067	72	844	0.182	100

Prog Lane under-utilisation found by the "Program"

Centro de Mercadeo - Palmas del Mar * Y906CDM2
Interseccion semaforizada PR-906 y Centro de Mercadeo (MAIN) 2020
Intersection No.: 1B
Cycle Time = 50

Table S.9 - SIGNAL TIMING DIAGRAM

Displayed (Phase) Green Times

```
                Phase A                    Phase B        Phase C

0                                      29              40             50
I-----------------------------------I---------------I-------------I
......GGGGGGGGGGGGGGGGGGGGGGGGGGGGGGGGG.......GGGGGGGGG.......GGGGGGG.
     4                                      33              44
```

Ef tive (Movement) Green Times

West: Centro de Mercadeo (MAIN)

Mov. 12 (L)

```
:                                      I               I              I
```

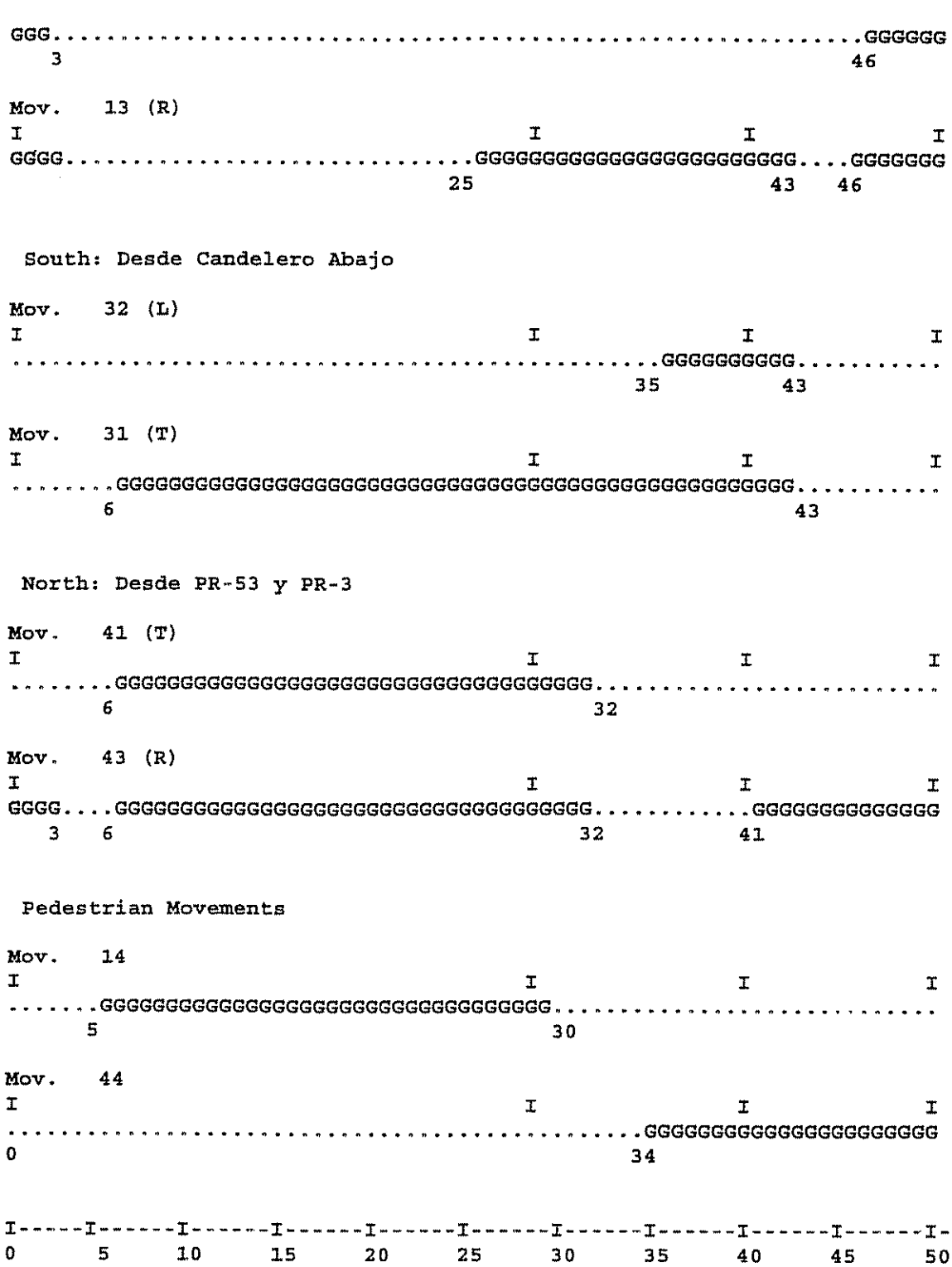

Centro de Mercadeo - Palmas del Mar * Y906CDM2
Interseccion semaforizada PR-906 y Centro de Mercadeo (MAIN) 2020
Intersection No.: 1B
Cycle Time = 50

Table S.12A - FUEL CONSUMPTION, EMISSIONS AND COST - TOTAL

No.		Fuel Total L/h	Cost Total $/h	HC Total kg/h	CO Total kg/h	NOX Total kg/h	CO2 Total kg/h	Lead Total kg/h
West: Centro de Mercadeo (MAIN)								
12	L	43.5	106.91	0.102	4.83	0.163	108.7	0.00000

13 R	86.3	185.15	0.188	9.69	0.323	215.7	0.00000
	129.8	292.06	0.290	14.51	0.486	324.4	0.00000
South: Desde Candelero Abajo							
32 L	41.8	115.09	0.134	7.56	0.224	104.6	0.00000
31 T	98.6	188.03	0.275	18.10	0.505	246.4	0.00000
	140.4	303.11	0.409	25.66	0.729	351.0	0.00000
North: Desde PR-53 y PR-3							
41 T	322.2	658.41	0.722	38.72	1.225	805.5	0.00000
43 R	40.9	83.72	0.085	4.49	0.151	102.3	0.00000
	363.1	742.13	0.807	43.21	1.375	907.8	0.00000
Pedestrians							
14		0.32					
44		0.40					
		0.72					
ALL VEHICLES:	633.3	1337.31	1.506	83.38	2.591	1583.2	0.00000
INTERSECTION:	633.3	1338.03	1.506	83.38	2.591	1583.2	0.00000

Centro de Mercadeo - Palmas del Mar * Y906CDM2
Interseccion semaforizada PR-906 y Centro de Mercadeo (MAIN) 2020
Intersection No.: 1B
Cycle Time = 50

Table S.12B - FUEL CONSUMPTION, EMISSIONS AND COST - RATE

Mov No.	Fuel Rate mL/km	Cost Rate c/km	HC Rate g/km	CO Rate g/km	NOX Rate g/km	CO2 Rate g/km	Lead Rate g/km
West: Centro de Mercadeo (MAIN)							
12 L	231.2	56.82	0.545	25.64	0.868	577.9	0.00000
13 R	229.3	49.22	0.498	25.75	0.859	573.3	0.00000
	229.9	51.75	0.514	25.71	0.862	574.9	0.00000
South: Desde Candelero Abajo							
32 L	283.3	77.91	0.904	51.15	1.516	708.2	0.00000
31 T	245.8	46.89	0.686	45.15	1.260	614.6	0.00000
	255.9	55.24	0.745	46.76	1.329	639.8	0.00000
North: Desde PR-53 y PR-3							
41 T	226.9	46.37	0.509	27.27	0.863	567.3	0.00000
43 R	226.1	46.25	0.470	24.78	0.833	565.3	0.00000
	226.8	46.36	0.504	26.99	0.859	567.1	0.00000
Pedestrians							
14		17.99					
44		22.12					
		20.05					
ALL VEHICLES:	233.4	49.28	0.555	30.72	0.955	583.4	0.00000
INTERSECTION:	233.4	49.24	0.555	30.72	0.955	583.4	0.00000

Centro de Mercadeo - Palmas del Mar * Y906CDM2
Interseccion semaforizada PR-906 y Centro de Mercadeo (MAIN) 2020
Intersection No.: 1B
Cycle Time = 50

Table S.15 - CAPACITY AND LEVEL OF SERVICE (HCM STYLE)

Mov No.	Mov Typ	Green Ratio 1st grn	Green Ratio 2nd grn	Time (g/C)	Total Flow (veh /h)	Total Cap. (veh /h)	Deg. of Satn (v/c)	Aver. Delay (sec)	LOS
West: Centro de Mercadeo (MAIN)									
12	L	0.140			159	184	0.862*	53.4	D
13	R	0.360	0.140*		320	447	0.716	23.2	B
					479	631	0.862	33.3	C
South: Desde Candelero Abajo									
32	L	0.160*			307	376	0.815	46.8	D
31	T	0.740			879	1077	0.816	11.1	B
					1186	1454	0.816	20.3	B
North: Desde PR-53 y PR-3									
41	T	0.520*			1228	1426	0.861	20.0	C
43	R	0.520	0.240		154	844	0.183	11.2	A
					1382	2270	0.861	19.1	B
Pedestrians									
/	(Ped)	0.500			6	10000	0.001	6.3	A
44	(Ped)	0.320			6	6400	0.001	11.6	B
					12	16400	0.001	8.9	B
ALL VEHICLES:					3047	4355	0.862	21.8	B
INTERSECTION:					3059	4355	0.862	21.7	B

Level of Service calculations are based on delay (HCM criteria).
Intersection capacity is calculated considering vehicle movements only.
* Maximum v/c ratio, or critical green periods

Centro de Mercadeo - Palmas del Mar * Y906CDM2
Interseccion semaforizada PR-906 y Centro de Mercadeo (MAIN) 2020
Intersection No.: 1B
Cycle Time = 50

Table D.0 - GEOMETRIC DELAY DATA

From Approach	To Approach	Negn Radius (m)	Negn Speed (km/h)	Negn Distance (m)
West: Centro de Mercadeo (MAIN)				
	South	10	18	16
	North	17	23	27
South: Desde Candelero Abajo				
	West	15	22	24
	North	S	64	23

North: Desde PR-53 y PR-3				
	West	10	18	16
	South	S	64	23

C tro de Mercadeo - Palmas del Mar * Y906CDM2
rseccion semaforizada PR-906 y Centro de Mercadeo (MAIN) 2020
Intersection No.: 1B
Cycle Time = 50

Table D.1 - LANE DELAYS

Lane No.	Mov No.	Deg. Satn x	Delay (seconds/veh) Analytical 1st dm1	2nd dm2	Model Total dm	Acc. Dec. dn	Queu -ing dq	Ratio dm/ di	Stopd (Idle) di	Geom dg	Overall d
West: Centro de Mercadeo (MAIN)											
1 L	12, 13	0.862	21.0	22.8	43.8	5.5	38.3	1.18	37.1	9.6 0.0	53.4
2 R	13	0.716	8.3	4.9	13.1	4.0	9.3	1.49	8.8	10.1	23.2
South: Desde Candelero Abajo											
1 L	32	0.816	20.3	19.4	39.7	5.3	34.4	1.20	33.2	9.7	49.4
2 LT	32, 31	0.816	19.7	17.0	36.8	6.7	30.0	1.27	28.8	9.7 0.0	43.9
3 T	31	0.816	4.3	4.8	9.1	7.6	1.5	14.18	0.6	0.0	9.1
North: Desde PR-53 y PR-3											
1 T	41	0.861	10.4	9.6	20.0	10.0	10.0	2.33	8.6	0.0	20.0
2 T	41	0.861	10.4	9.6	20.0	10.0	10.0	2.33	8.6	0.0	20.0
3 R	43	0.182	1.1	0.0	1.1	1.3	0.7	1.47	0.7	10.1	11.2

dn is average stop-start delay for all vehicles queued and unqueued

Centro de Mercadeo - Palmas del Mar * Y906CDM2
Interseccion semaforizada PR-906 y Centro de Mercadeo (MAIN) 2020
Intersection No.: 1B
Cycle Time = 50

Table D.2 - LANE STOPS

Lane No.	Mov No.	Deg. Satn x	Effective Stop Rate he1	he2	Geom. hg	Overall h	Prop. Queued pq	Queue Move-up Rate hqm
West: Centro de Mercadeo (MAIN)								
1 L	12, 13	0.862	0.81	0.05	0.00	0.86	1.000	0.48
2 R	13	0.716	0.77	0.02	0.08	0.87	0.878	0.16
South: Desde Candelero Abajo								
1 L	32	0.816	0.81	0.05	0.00	0.86	1.000	0.46
2 LT	32, 31	0.816	0.82	0.05	0.00	0.87	1.000	0.43
3 T	31	0.816	0.65	0.03	0.00	0.69	0.710	0.16
North: Desde PR-53 y PR-3								
1 T	41	0.861	0.84	0.06	0.00	0.90	0.934	0.32
2 T	41	0.861	0.84	0.06	0.00	0.90	0.934	0.32
3 R	43	0.182	0.24	0.00	0.49	0.73	0.295	0.00