# *Comprehensive Performance Test Plan*

*Trane 1 and Trane 2*
*Hazardous Waste Incinerators*

*(Revision 7.0)*

*Volume 1 of 2*

*TAPI Puerto Rico, Inc.*
*Guayama, Puerto Rico*

*May 2012*

TABLE OF CONTENTS

ACRONYMS AND ABBREVIATIONS

1.0 INTRODUCTION ..... 7

2.0 FEED STREAM CHARACTERIZATION ..... 9

2.1 HAZARDOUS WASTE FEED ..... 9
2.1.1 Feed Stream Description ..... 9
2.1.2 Feed Stream Analysis ..... 10
2.1.3 Organic Hazardous Air Pollutants ..... 10

2.2 KEROSENE ..... 11

3.0 ENGINEERING DESCRIPTION OF INCINERATORS ..... 12

3.1 MANUFACTURER'S NAME AND MODEL NUMBER ..... 12

3.2 INCINERATOR DESCRIPTION ..... 12

3.3 AUTOMATIC WASTE FEED CUTOFF SYSTEM ..... 16

3.4 AIR POLLUTION CONTROL SYSTEM ..... 17

3.5 STACK GAS MONITORING ..... 18

4.0 WAIVER OF PERFORMANCE TEST ..... 19

4.1 WAIVER OF DRE TESTING ..... 19

4.2 WAIVER OF MERCURY TESTING ..... 19
4.2.1 MTEC for Mercury ..... 19
4.2.2 Performance Testing for SVM and LVM ..... 20
4.2.3 Demonstration of Compliance with Metals Emissions Standards ..... 21

5.0 PERFORMANCE EVALUATION OF CONTINUOUS MONITORING SYSTEMS ..... 23

5.1 CONTINUOUS MONITORING SYSTEM ..... 23
5.1.1 Description of CMS ..... 23
5.1.2 Performance Evaluation Testing ..... 24

5.2 CONTINUOUS EMISSION MONITORING SYSTEM ..... 25
5.2.1 Description of CEMS ..... 25
5.2.2 Performance Evaluation Testing ..... 26

6.0 TEST SCHEME ..... 28

6.1 PREPARATION OF WASTE FEED ..... 28
6.1.1 Spiking Procedures ..... 28
6.1.2 Waste Feed Selection for POHC Emissions and DRE Determination ..... 29
6.1.3 Waste Feed Selection for Particulate Emission Determination ..... 29
6.1.4 Waste Feed Selection for Hydrogen Chloride/Chlorine Emission Determination ..... 30

6.1.5 Waste Feed Selection for Metals Emission Determination ..... 30
6.1.6 Waste Feed Selection for Measurement of Products of Incomplete Combustion ..... 31
6.2 PRELIMINARY TESTING ..... 31
6.3 DESCRIPTION OF COMPREHENSIVE PERFORMANCE TEST ..... 32
6.4 PROPOSED CPT OPERATING CONDITIONS..... 34
6.5 POST-CPT OPERATING CONDITIONS ..... 36
6.6 TEST SCHEDULE ..... 36
7.0 SAMPLING AND MONITORING PROCEDURES ..... 38
7.1 WASTE FEED SAMPLING AND ANALYSIS..... 38
7.2 STACK GAS SAMPLING AND ANALYSIS..... 39
7.3 LIQUID STREAM SAMPLING AND ANALYSIS ..... 41
7.4 SAMPLING AND ANALYSIS OF OTHER FEED MATERIALS ..... 41
7.5 QUALITY ASSURANCE/QUALITY CONTROL ..... 42
7.6 FUGITIVE EMISSIONS DETECTION..... 42
7.7 COMPREHENSIVE PERFORMANCE TEST DATA REPORTING ..... 42
8.0 REFERENCES ..... 43

APPENDICES

A Incinerator Feed Stream Characterization
B Incinerator Engineering Information
C Metals Feed/Spiking Calculations
D Quality Assurance Project Plan
E Support Documentation
F Data In-Lieu of Testing, and Previous PCDD/PCDF Data

LIST OF TABLES

2-1. Aqueous Waste Feed Characteristics
2-2. Organic Waste Feed Characteristics
2-3. Organic Hazardous Air Pollutants Expected in Waste Feed
4-1. Comparison of Trane 1 and Trane 2 Incinerator
4-2. Maximum Theoretical Emission Concentration for Mercury
4-3 DELETED
4-4. DELETED
5-1. Trane 1 Incinerator Key Process Control Monitors
5-2. Trane 2 Incinerator Key Process Control Monitors
5-3. Trane 1 Incinerator Automatic Waste Feed Cutoff Interlocks
5-4. Trane 2 Incinerator Automatic Waste Feed Cutoff Interlocks
5-5. Trane 1 Incinerator Automatic Waste Feed Cutoff Test
5-6. Trane 2 Incinerator Automatic Waste Feed Cutoff Test
6-1. Summary of Incinerator Waste Feed Characteristics
6-2. Planned CPT Operating Conditions
6-3. Comprehensive Performance Test Schedule
6-4. Typical Test Run Sequence
7-1. Summary of Comprehensive Performance Test Sampling Program
7-2. Summary of Sampling Locations, Sampling Parameters, Sampling and Analytical Methods for Comprehensive Performance Test
7-3. DELETED
7-4. DELETED

LIST OF FIGURES

3-1. Location of Incinerators at the Facility
3-2. Trane 1 and Trane 2 Incinerators Process Flow Diagram
5-1. Trane 1 and Trane 2 Incinerators Location of Key Monitors
5-2. Trane 1 and Trane 2 Incinerators Location of Key Interlocks
6-1 Location of Spiking Systems
7-1. Trane 1 and Trane 2 Incinerators Sampling Locations
7-2. Stack Sampling Traverse Points
7-3 through 7-10 DELETED

## ACRONYMS AND ABBREVIATIONS

| | |
|---|---|
| Acfm or ACFM | Actual cubic feet per minute |
| APCE | Air pollution control equipment |
| ASTM | American Society for Testing and Materials |
| AWFCO | Automatic waste feed cutoff |
| Btu or BTU | British thermal unit |
| CEM or CEMS | Continuous emission monitor or Continuous emission monitoring system |
| CFR | Code of Federal Regulations |
| CMS | Continuous monitoring system |
| COA | Certificate of analysis |
| CPT | Comprehensive performance test |
| cu. ft. | Cubic foot |
| DAC | Data Acquisition Computer |
| DAS | Data Acquisition system |
| DOC | Documentation of Compliance |
| DRE | Destruction and removal efficiency |
| dscf | Dry standard cubic foot |
| dscfm | Dry standard cubic feet per minute |
| dscm | Dry standard cubic meter |
| EPA | Environmental Protection Agency |
| EQB | Puerto Rico Environmental Quality Board |
| ft | Feet |
| FRP | Fiber reinforced plastic |
| GC/FID | Gas chromatography/flame ionization detector |
| GC/MS | Gas chromatography/mass spectrometry |
| gpm | U.S. Gallons per minute |
| HAP | Hazardous Air Pollutant |
| hr | Hour |
| HRGC/HRMS | High resolution gas chromatography/high resolution mass spectrometry |
| HWC MACT | Hazardous Waste Combustor Maximum Achievable Control Technology regulations |
| I/O | Input/output |
| in | Inch |
| in w.c. | Inches of water column (pressure measurement) |
| L | Liter |
| lb | Pound |
| LCD | Liquid crystal display |
| lpm | Liters per minute |
| LVM | Low volatility metals (combination of As, Be, and Cr) |
| mA | Milliamp |
| mg | Milligram |
| ml | Milliliter |
| MTEC | Maximum Theoretical Emission Concentration |
| NDIR | Non-dispersive infrared |
| ng | Nanogram |
| NOC | Notification of Compliance |
| PCDD/PCDF | Polychlorinated dibenzo-p-dioxins and polychlorinated dibenzo furans |
| ppmv | Parts per million by volume |
| ppmvd | Parts per million by volume, dry basis |
| psi | Pounds per square inch (pressure) |
| QA | Quality Assurance |

| | |
|---|---|
| QAPP | Quality Assurance Project Plan |
| QC | Quality Control |
| RATA | Relative Accuracy Test Audit |
| RCRA | Resource Conservation and Recovery Act |
| SCA | Specific collection area |
| Scfh or SCFH | Standard cubic feet per hour |
| Scfm or SCFM | Standard cubic feet per minute |
| SOP | Standard Operating Procedure |
| sq. ft. | Square feet |
| SRE | System removal efficiency |
| SS | Stainless steel |
| SVM | Semivolatile Metals (Combination of Cd and Pb) |
| TCDD | Tetrachloro dibenzo-p-dioxin |
| TEQ | Toxicity equivalent (related to 2,3,7,8-TCDD) |
| ug | Microgram |
| WESP | Wet Electrostatic Precipitator |

## 1.0 INTRODUCTION

This document presents the Comprehensive Performance Test (CPT) Plan for two hazardous waste incinerators operated by TAPI Puerto Rico, Inc. (TAPI), formerly Chemsource Corporation, at its pharmaceutical manufacturing facility in Guayama, Puerto Rico. The incinerators are subject to the National Emission Standards for Hazardous Air Pollutants from Hazardous Waste Combustors. 40 CFR Part 63, Subpart EEE et al (also known as the Hazardous Waste Combustor Maximum Achievable Control Technology, or HWC MACT, standards). The incinerators are classified as existing hazardous waste combustors as defined at 40 CFR §63.1201.

TAPI's hazardous waste incinerators, referred to as the Trane 1 and Trane 2 units, are vertically fired liquid injection incinerators which treat hazardous process wastewater generated in the pharmaceutical manufacturing process. The incinerators do not treat waste from off-site sources. TAPI is permitted under RCRA Permit No. PRD090613357 to operate the incinerators. The permit was renewed in 2007. A copy of the incineration module (Module IV) from the current permit is included in Appendix E to this CPT Plan for reference.

Trial burn testing was conducted in 1988 in accordance with EPA-approved protocols to demonstrate compliance with applicable RCRA standards set forth at 40 CFR 264 Subpart O. The tests demonstrated that all standards were successfully achieved. A site-specific Preliminary Human Health Risk Assessment (ERM, 2003) was conducted which demonstrates that operation of the incinerators does not pose an unacceptable risk to human health and the environment. Subsequently, a CPT was conducted in 2006 to demonstrate compliance with the original HWC MACT standards at 40 CFR 63.1203 and to gather data for use in a site-specific human health risk assessment. That test was successful in demonstrating compliance with all applicable HWC MACT standards. The subsequent risk assessment was also successful in demonstrating that continued operation of the TAPI incinerators would not pose an unacceptable risk.

The objectives of this Comprehensive Performance Test are to demonstrate that the two incinerators achieve compliance with the Permanent Replacement HWC MACT standards, set forth at 40 CFR 63.1219, to establish limits for operating parameters set forth at 40 CFR 63.1209, and to demonstrate compliance with performance specifications for continuous monitoring systems.

HWC MACT standards applicable to TAPI's hazardous waste incinerators are summarized below (40 CFR 63.1219):

- Dioxins and furans less than 0.40 ng TEQ/dscm corrected to 7% oxygen. (This standard applies as per 40 CFR 63.1219(a)(1)(ii) since the incinerators are not equipped with a waste heat boiler or dry air pollution control system.)
- Mercury less than 130 ug/dscm corrected to 7% oxygen.
- Lead and cadmium less than 230 ug/dscm, combined emissions, corrected to 7% oxygen. Also referred to as semivolatile metals (SVM).
- Arsenic, beryllium and chromium less than 92 ug/dscm, combined emissions, corrected to 7% oxygen. Also referred to a low volatility metals (LVM).
- Carbon monoxide less than 100 parts per million by volume, on an hourly rolling average, (monitored continuously with a continuous emissions monitoring system), dry basis and corrected to 7% oxygen, and hydrocarbons less than 10 parts per million by volume, on an hourly rolling average, dry basis and corrected to 7% oxygen, and reported as propane, at any time during the destruction and removal efficiency test runs or their equivalent.
- Hydrochloric acid and chlorine gas ($HCl/Cl_2$) less than 32 parts per million by volume. combined emissions, expressed as chloride ($Cl^-$) equivalents, dry basis and corrected to 7% oxygen.
- Particulate matter less than 29 mg/dscm (0.013 gr/dscf) corrected to 7% oxygen.
- Destruction and removal efficiency of at least 99.99% for principal organic hazardous constituents (POHC), designated under paragraph (c)(3) of §63.1219.

In accordance with a February 2003 Class 1 RCRA Permit modification, TAPI has installed a Wet Electrostatic Precipitator (WESP) which serves both the Trane 1 and Trane 2 incinerators. The WESP is necessary to achieve the more stringent MACT emission standard for particulate matter. The incinerators did not otherwise require upgrade or modification in order to achieve compliance with MACT standards.

# 2.0 FEED STREAM CHARACTERIZATION

This section provides information regarding the analysis of each feed stream (i.e., waste feed and auxiliary fuel) as fired into TAPI's hazardous waste incinerators. This discussion applies to both the Trane 1 and Trane 2 incinerators since the incinerators treat the same hazardous waste stream and use kerosene as auxiliary fuel. This information is being provided in accordance with 40 CFR §63.1207(f)(l)(i) and (ii).

## 2.1 HAZARDOUS WASTE FEED

### 2.1.1 Feed Stream Description

Hazardous process wastewater is generated at the TAPI facility during the synthesis of intermediate and final pharmaceutical products. Sources of hazardous waste include, but are not limited to, mother liquors, extraction wash, solvent recovery bottoms, filter wash and equipment wash. Hazardous waste streams are conveyed from various production buildings via dedicated above ground stainless steel pipelines to TAPI's hazardous waste storage tanks.

Wastewaters are segregated at the point of generation into two waste streams: low heat value aqueous waste and high heat value organic waste. Minimal amounts of compatible laboratory waste are discharged into the aqueous and organic waste streams. Both aqueous waste and organic waste are treated in the TAPI incinerators. A description of each waste stream is presented below.

Aqueous Waste - Aqueous waste includes waste from the manufacturing processes, laboratory operations and maintenance activities. The laboratory operations contribute less than 1% of the total process wastewater generated at the facility. The waste is identified as an aqueous process wastewater because it contains >50% water by weight. Aqueous waste is classified as hazardous due to the potential presence of spent solvents including methylene chloride (F002), methyl alcohol (F003), xylene (F003), ethyl acetate (F003), n-butanol (F003), and toluene (F005). In addition, the waste may have an ignitability characteristic (D001) due to the presence of ethyl alcohol and isopropanol. The waste may contain trace levels of metals.

Organic Waste - Organic waste includes waste from the manufacturing processes, laboratory operations, and maintenance activities. The laboratory operations contribute less than 1% of the total process wastewater generated at the facility. The waste is identified as organic because it contains <50% water by weight. Organic waste is classified as hazardous due to the potential presence of spent solvents including methylene chloride (F002), methyl alcohol (F003), xylene (F003), ethyl acetate (F003), n-butanol (F003),

and toluene (F005). In addition, the waste may have an ignitability characteristic (D001) due to the presence of ethyl alcohol and isopropanol. The waste may contain trace levels of metals.

### 2.1.2 Feed Stream Analysis

Chemical and physical characteristics of the aqueous and organic waste streams as fired to the incinerators are presented in Tables 2-1 and 2-2, respectively. Data presented are based on results of waste testing conducted in accordance with TAPI's Feedstream Analysis Plan for the three- year period 2008-2010. Waste analysis results are presented in Appendix A. Data presented in Tables 2-1 and 2-2 include minimum, maximum and average values for the following parameters:

- Heating Value
- Ash Content
- Semi-volatile metals (lead, cadmium)
- Low volatile metals (arsenic, beryllium, chromium)
- Mercury
- Organic chloride
- Inorganic chloride
- Total chlorine
- Viscosity
- pH
- Specific Gravity
- Moisture.

The data presented in Tables 2-1 trough 2-3 were collected in accordance with the Feedstream Analysis Plan using sampling and analysis methods established in EPA guidance (e.g., SW-846). Data achieved compliance with all required data quality objectives as established in the Plan.

### 2.1.3 Organic Hazardous Air Pollutants

Table 2-3 lists organic hazardous air pollutants (HAPs) reasonably expected to be found in the hazardous waste streams being fed to the incinerators. Also included in Table 2-3 is an approximate quantification of each of the HAPs. EPA-approved SW-846 analytical methods were used in the analyses. Waste analysis results are presented in Appendix A. This information is based on waste analysis results for 2008 through 2010 as well as TAPI's knowledge regarding HAPs that may reasonably be expected to be present in the manufacturing process.

Aqueous and organic waste streams are not blended prior to firing to the incinerators. Each waste stream is injected into the combustion chamber through a dedicated nozzle (described further in Section 3).

## 2.2 KEROSENE

Each incinerator uses kerosene as an auxiliary fuel at a maximum rate of approximately 4.8 liters per minute although auxiliary fuel is typically not required or is required at only minimal flow rates. Typical kerosene usage is about 0.5 to 2.0 lpm. A description of the chemical and physical characteristics of kerosene is provided below. TAPI is not required under its RCRA Permit to conduct routine testing of kerosene. However, kerosene is now tested in accordance with its Feedstream Analysis Plan. Analytical results of kerosene samples collected March 28, 2011 are discussed below and are presented in Appendix A. Also, each shipment of kerosene is tested for specified parameters. As described in Section 7 of this plan, kerosene will be tested during the Comprehensive Performance Test.

Heating Value - The heating value of kerosene is approximately 18,900 BTU/lb (Brunner, 1991). The heating value as measured by TAPI was 19,841 BTU/lb.

Ash Content - The ash content of kerosene can range up to 0.5% (Brunner, 1991). The ash content of a kerosene shipment as measured by TAPI was 0.01% (see Appendix A for analytical results).

Viscosity - The viscosity of kerosene is approximately 2 cp at 20°C (Perry, 1984). The viscosity of a kerosene shipment as measured by TAPI was 1.77 cSt (see Appendix A for analytical results).

Metals Content - Volatile, semi-volatile and low-volatile metals are not expected to be present in kerosene above trace levels. Recent analytical results for metals in kerosene are summarized below:

| Metal | March 28, 2011 |
|---|---|
| Mercury | 0.0025 mg/L |
| Cadmium | <0.01 mg/L |
| Lead | 0.5709 mg/L |
| Arsenic | <0.01 mg/L |
| Beryllium | <0.002 mg/L |
| Chromium | 0.0262 mg/L |

Chloride Content - Chlorides are not expected to be present in kerosene above trace levels. Recent analytical results for total chlorine in kerosene are <0.01%

# 3.0 ENGINEERING DESCRIPTION OF INCINERATORS

This section provides an engineering description of the incinerators. This information is being provided in accordance with 40 CFR §63.1207(f)(1)(iii). The locations of the incinerators at the TAPI facility are presented in Figure 3-1.

The Trane 1 and Trane 2 incinerators are essentially identical in design, construction and operation. Accordingly, the information provided below applies to both the incinerators, unless stated otherwise.

## 3.1 MANUFACTURER'S NAME AND MODEL NUMBER

The two incinerators are Sub-X Liquid Waste Oxidizers manufactured by the Trane Thermal Company of Conshohocken, Pennsylvania. They do not have model numbers. Trane 1 was installed in 1977. Trane 2 was installed in 1979.

## 3.2 INCINERATOR DESCRIPTION

Type of Incinerator

The incinerators are downfired liquid waste incinerators each equipped with a quench tank, high- energy Venturi scrubber, separator (including a mist eliminator), a common Wet Electrostatic Precipitator, and a stack. A schematic diagram of the two incinerators and the common WESP and stack is presented in Figure 3-2.

Dimensions of the Combustion Chamber

The combustion chamber of each incinerator is a vertical cylinder 3 ft. 9.75 in. in diameter and 22 ft. 8.4 in. high. The calculated cross sectional area of the combustion zone is 11.42 $ft^2$. The volume of the incinerator below the aqueous injection nozzles is 248.9 $ft^3$. The maximum unit heat input is 11 x $10^6$ Btu/hr. The combustion chamber residence time of each incinerator is 1.6 seconds. Calculations used in deriving the residence time are presented in Appendix E. The combustion chamber is manufactured from carbon steel and is lined with 9-inch thick high duty refractory and 2 1/2-inches of insulating brick.

Description of the Auxiliary Fuel System

The auxiliary fuel is kerosene. The fuel is stored in centrally located storage tanks and is supplied to all incinerators from a plant utility supply main pressurized at 100 psi. The maximum flow rate of fuel required by the incinerator is 4.8 liters per minute.

Capacity of Prime Mover

A single forced draft fan supplies all of the air entering an incinerator. The air supply prime mover is a 100 HP, electric drive, turbo compressor supplied by the Spencer Turbine Company of Hartford, CT, or equivalent. The blower is rated at 2,199 SCFM at 149.4 inches $H_2O$. The model number of the units presently installed is 36205134, Serial No. 808259J06. These compressors periodically require repair, and may, if required, be replaced by a different make or model unit of similar capacity and characteristics.

Burner Design

The main burner is a top-mounted Trane Vortex combination burner, Model LV-10, or equivalent, which can fire any combination of liquid or gaseous wastes or fuels. The burner has been modified by replacement of the liquid atomizing tip with a NAO 226-3 atomizing nozzle with 14 number 40 holes. The burner is rated to deliver up to $10 \times 10^6$ Btu/hr.

Waste Feed System

Waste feed is injected to the combustion chamber via Caloric ultrasonic atomizing nozzles, models VN630, or equivalent. The liquid is supplied through an unobstructed cylindrical 1/2 inch opening in the center of the nozzle and is atomized by compressed air. The nominal flow of waste through the nozzle is 1,386 lb/hr. The maximum flow of atomizing medium, which may be steam as well as air, is 5,250 scfh at a pressure of 22 psi. The nozzle will operate satisfactorily with an atomizing air pressure as low as 3 psi. This nozzle is insensitive to solid particles and is effective for liquids with viscosities up to 1000 centipoise.

Information on the incinerator waste feed system, including the configuration of the waste feed tanks and waste feed lines, is presented in Appendix E.

Construction Materials

The construction materials for the incinerator system components are given below.

| COMPONENT | MATERIAL |
|---|---|
| Organic Waste Piping | Flanged SS pipe |
| Aqueous Waste Piping | Flanged FRP and SS pipe |
| Waste Feed Pumps | Stainless Steel |
| Incinerator Combustion Chamber | Carbon steel shell; 9" thick chamber lining of high duty refractory and 2 ½" of insulating brick |
| Quench Tank | Carbon steel, lined inside with natural rubber |
| Connecting Duct | Fiberglass reinforced plastic (FRP) |
| Venturi Scrubber and Elbow | Stainless steel |
| Separator and Stack | Fiberglass reinforced plastic (FRP) |

Location and Description of Temperature. Pressure and Flow Indicating and Control Devices

The critical monitors and controllers used in the process are described in Section 5. During normal maintenance of the incinerators, it occasionally becomes necessary to replace one of more of these instruments. TAPI maintains spare parts for critical CMS and CEMS components in the event that a CMS or CEM malfunctions or fails. During installation of equipment, TAPI determines the spare parts requirements. Spare parts maintained by TAPI may include those critical to instrument operability and parts recommended by the equipment vendor. TAPI also considers delivery lead time, number of installed units, cost of the spare part and replacement parts inventory, and other factors in the development of an adequate supply of spare equipment and parts. TAPI maintains a current contact list of all CMS and CEM providers to ensure that replacement parts not stored on site will be shipped quickly as necessary. CMS components may be replaced by instruments of different make or model having a similar function without prior approval from EPA.

Temperature - The combustion chamber temperature is measured at each unit using a Chromel Alumel thermocouple which is located approximately 7 feet from the base of the combustion chamber. A drawing showing the location of the thermocouple within the chamber is presented in Appendix E. The output of the thermocouples (TIC-905-1 and TIC-905-2) is fed directly to the Provox computer. The signal from the temperature controller is used to control the flow of auxiliary fuel. The temperature is recorded in the Provox system.

Organic Waste Flow Rate - The flow rate of the organic waste is monitored by a flowmeter. The signal from the transmitter is recorded in the Provox system.

Aqueous Waste Flow Rate - The flow rate of the aqueous waste is monitored by a flowmeter. The signal from the transmitter is recorded in the Provox system.

Combustion Gas Velocity - Since the system is a forced draft, pressurized system, this air is the sole source of air for the combustion chamber and its flow rate bears a direct relationship to the flow rate, and hence, velocity of the combustion gas.

The flow rates of the main and secondary combustion air and the waste feed and kerosene atomization air are monitored by Annubar elements located in the discharge line from the forced draft blower. It senses (velocity + static) head of the flowing fluid at several points representing equal flow areas across the pipe. A measure of the static pressure is also taken from the downstream side of the element. The difference between the two pressures is a measure of the average velocity pressure of the flowing fluid. The flow rate is recorded in the Provox system.

Auxiliary Fuel Flow Rate - The auxiliary fuel (kerosene) flow rate is controlled and monitored by an orifice flow meter similar to the organic waste flow. Auxiliary fuel is normally not used while the incinerator is in RCRA operation; however, occasionally a waste requires the addition of fuel to improve burning characteristics. During operations under the RCRA permit, if a waste having a low heat value is encountered, sufficient kerosene will be burned with the waste to bring the composite heat of combustion up to acceptable levels.

Incinerator Control System

A PROVOX computerized control and supervision system manages the operation of the incinerators and its auxiliary equipment. The system is considered "semi-automatic" because it requires the assistance of an operator. The operator communicates with the control system via a 4 bay PROVUE OPCON console, which allows the operator to monitor and control the operation of the hazardous waste combustion (HWC) process area. Through this supervision system the operator initializes, monitors, and controls the startup and shutdown procedures. This interface keeps the operator informed of the incinerators component states as well as alarms due to malfunction events or operative limit exceedences. The supervision system allows the operator to take actions or initiate/modify operative parameters or set points in order to maintain the Incinerator's performance. In addition, the system provides the operator with the ability to

place selected equipment and systems into Manual operation, if so desired. However, the start-up, normal operation, and shutdown operations must be done through the supervision interface.

The system is supported by a NEXUS DAS Server which does all the required regulatory data computations, data storage, report generation, and verification of the regulatory operation limits. This server is connected to an EMERSON PAS Server and SICK MAIHAK control emission monitoring system (CEMS). The EMERSON PAS Server receives measurements from all CMS through the PROVOX data highway that is connecting all the devices used to operate and control the Incinerators. The EMERSON PAS Server sends this information to the NEXUS DAS Server. The CEMS measures concentrations of CO and $O_2$ in the stack and sends this information as well as instrument status to the NEXUS DAS Server.

Reports of the NEXUS DAS Server are continuously monitored in two NEXUS DAS Client PCs with monitor, keyboard and mouse. One of them is located in the computer room and the other one in the control room. Results of the NEXUS DAS Server computations generate "Waste Cut off' or "Shutdown" decisions in case or exceeding regulatory limits. Those actions are executed through the EMERSON PAS Server, which interfaces with the PROVOX OPCON console control system.

### 3.3 AUTOMATIC WASTE FEED CUTOFF SYSTEM

An automatic waste/incinerator shutdown procedure is included in the automatic control system installed on the incinerators. The system prevents excessive emissions or damage to the incinerators due to abnormal operating conditions. Key operating parameters are continuously monitored (see Section 5 for further discussion on operating parameters). If the value of any of the parameters exceeds the maximum preset limits (or falls below the minimum, if applicable), an alarm is sounded and the aqueous and organic waste fuel valves are automatically closed. Auxiliary fuel continues to burn or is reintroduced, if necessary. The combustion air blower, the Venturi recirculation pump, the quench tank recirculation pump, and WESP recirculation pump remain running in this type of a shutdown unless the shutdown signal was initiated from one of these units.

All MACT-required parameters are monitored continuously. Each CMS samples the regulated parameter at least once every 10 seconds and computes and records the average value every 60 seconds. The system then calculates rolling averages in accordance with MACT requirements, generally 60 minute rolling averages for total waste feed and APCE operating parameters and 12 hour rolling averages for waste feed limitations for specific constituents. Periods of time are ignored when one-minute values are not available for calculating rolling-averages. When one minute values become available again, the first

one minute rolling average is added to the previous 59 values to calculate rolling averages. During waste feed cutoffs, operating parameter limits must continue to be monitored.

The organic and aqueous waste feed may also be manually shutoff if necessary. This action is executed by the operator through a computerized control and supervision system, which is described in Appendix B. An excerpt from TAPI's Startup, Shutdown and Malfunction Plan is included in Appendix E which provides further discussion on shutdown procedures.

### 3.4 AIR POLLUTION CONTROL SYSTEM

Quench Tank - Flue gases from the combustion chamber are discharged downward into a Sub-X quench tank which is 11 feet, 5 inches in diameter and 8 feet, 10 inches in height. The water level in the quench tank is maintained at approximately the midpoint by automatic controls, which use a centrifugal pump to bleed water from the Venturi separator system. The combustion gases are cooled to approximately the adiabatic saturation temperature by water sprays and by bubbling through the water contained in the tank. A caustic soda solution is automatically added to the recirculating liquid to maintain a preset pH. The dissolved solids level in the quench solution is maintained within acceptable limits by manual settings by the flow rate for a continuous bleed from the recycle line.

Venturi Scrubber - The gaseous effluent from the quench tank enters the Venturi scrubber, which removes the majority of the entrained particulate matter. The Venturi currently in use is a variable throat, Model ATV10, manufactured by Trane Thermal Company, which was supplied with the incinerator. An equivalent unit may be substituted for this unit if maintenance requirements so dictate. A centrifugal pump recirculates the scrubbing water from the separator to the Venturi scrubber. The recirculation rate is approximately 250 liters per minute. Solution from this recycle loop is bled into the quench tank as needed to control the level in that system. Clean water is added to the separator to make up for this loss. It is not necessary to use alkali in the Venturi since the low level of oxygen and the high level of water vapor present in the combustion chamber depresses the formation of elemental chlorine to insignificant levels. The hydrochloric acid formed is highly soluble in water and any acid passing through the alkaline quench is efficiently removed by the water in the Venturi.

Separator - Flue gases from the Venturi scrubber enter tangentially into a 5-foot diameter by 18- foot high separator. The water level in the separator is maintained by automatic controls. A mist eliminator, which consists of a 2-foot bed of 4-inch Tellerettes or equivalent packing, is located 12 feet from the base of the separator. Exhaust from the separator is conveyed to the common WESP.

Wet Electrostatic Precipitator (WESP) - The purpose of the WESP is to remove submicron solid particulate, liquid mist and condensed organic matter. The WESP is configured for up flow of gas and consists of the following components: water jacketed collection tubes, ionizing electrodes, high voltage support frame, air purge and flushing systems, integral multi-channel bed pre-scrubber, transformer rectifier set and associated type 304 stainless steel high voltage bus duct, current limiting reactor and automatic voltage control (AVC) panel. The WESP is designed to operate continuously with a liquid film minimum of 25 microns thick on the surface of collecting tubes. The WESP minimum Specific Collection Area (SCA) is 200 sq.ft./ 1000 acfm The WESP corona discharge power with ambient air load at standard conditions is 2500 Watt/1000 ACFM. Further detail on the design of the WESP is presented in Appendix B.

Operation of the WESP pre-scrubber is not required to comply with the MACT emission standard for hydrochloric acid and chlorine gas. During the CPT, caustic will not be fed into pre-scrubber.

Fugitive Emission Control - Fugitive emissions are controlled by the construction of the system. The entire incineration system operates under positive pressure supplied by the combustion air blower. The system, including the combustion chamber, quench tank, ductwork, Venturi, separator, and the WESP, is designed and maintained as a pressure tight, leak free system. The waste supply system is also a pressure tight and leak free flanged pipe system. Leaks at pump stuffing boxes are avoided by the use of mechanical seals.

Maintenance procedures for TAPI's air pollution control equipment and continuous monitoring systems are presented in TAPI's Operations and Maintenance Manual which has been developed in accordance with HWC MACT requirements. A copy of a table from the manual which summarizes PM procedures is presented in Appendix E.

### 3.5 STACK GAS MONITORING

Stack gases are continually monitored for carbon monoxide (CO) and oxygen ($O_2$). The incinerators have a single common stack, which is currently equipped with a Continuous Emission Monitor (CEM) for $CO/O_2$. The CEM is designed to ensure full compliance with all applicable MACT specifications (Performance Specification 4B). Failure of the CEM will trigger a waste feed cutoff to the incinerators. Further information on the CEM is presented in Section 5.

# 4.0 WAIVER OF PERFORMANCE TEST

TAPI is requesting waivers of the following performance testing requirements:

1. Destruction and removal efficiency (DRE) and hydrocarbon testing.
2. Emissions testing of mercury.

Further information on these waiver requests is presented in the following sections.

## 4.1 WAIVER OF DRE TESTING

40 CFR 63.1207(c)(2)(iii) allows for submission of previous compliance testing results as data-in-lieu of the CPT, provided the data are no more that 54 months old dated from the promulgation of the Final Replacement Standards, October 12, 2005. This data age restriction does not apply to DRE data per 40 CFR 63.1207(c)(2)(iv).

TAPI conducted a CPT to demonstrate compliance with the original HWC MACT standards in 2006, during which a DRE of substantially greater than 99.99% was demonstrated. Also, during that CPT, TAPI demonstrated compliance with both the carbon monoxide and the total hydrocarbon standards. These data are being submitted with the revised CPT Plan as data in-lieu of conducting DRE testing and hydrocarbon testing during the upcoming CPT, which is the subsequent first CPT to demonstrate compliance with the Permanent Replacement Standards for the HWC MACT regulations. Appendix F contains the previous DRE and hydrocarbon data.

## 4.2 WAIVER OF MERCURY TESTING

Maximum theoretical emission concentrations (MTEC) in incinerator stack gas have been developed for mercury. The MTEC for mercury will be used to demonstrate compliance with the HWC MACT emission standard for mercury, and will be confirmed during the CPT through feed analysis of mercury.

### 4.2.1 MTEC for Mercury

The methodology used to calculate the MTEC is summarized below and is consistent with that set forth at 40 CFR 63.1207(m)(1). Table 4-2 provides supporting documentation for calculation of the MTEC for mercury. Calculations are presented for two modes of operation - a single incinerator operating (Mode 1) and both incinerators operating (Mode 2).

- A maximum feed rate (in ug/min) of mercury was calculated based on a maximum historical concentration of the metal in the waste feed (in ug/l) and the anticipated maximum waste feed rate (in liters per minute [lpm]) into each incinerator.
- A maximum emission rate (in ug/min) was determined assuming that 100% of the mass of mercury entering the combustion chamber is emitted through the stack. Under this assumption, the maximum emission rate for mercury is equal to the maximum feed rate for mercury.
- A minimum stack gas flow rate (in dscf/min) was established for each incinerator that would allow the system to meet the HWC MACT emission standard at the maximum mercury feed rate. These minimum stack gas flow rates are below minimum stack gas flow rates experienced during normal incinerator operation.
- The MTEC for mercury was calculated (in ug/dscm) considering the maximum emission rate and the minimum stack gas flow rate.

TAPI will comply with all applicable provisions of 40 CFR §63.1207(m), after testing is complete, in order to continuously demonstrate compliance with the mercury emission standard. After testing is completed, TAPI will use total combustion air flow rate as a surrogate for stack gas flow rate, as allowed in 40 CFR §63.1207(m)(1) and (m)(5). Results of previous trial burns and CPTs demonstrate that total combustion air adequately correlates with stack gas flow rate (A. T. Kearney, 1988). Furthermore, USEPA has stated that total combustion air flow is a suitable surrogate for stack gas flow rate (USEPA, 1989a). Relevant excerpts from this guidance are presented in Appendix E. Both total combustion air and stack gas flow rate will be continuously monitored during the test. Results will be evaluated to ensure that correlation between the two parameters is maintained.

TAPI used the heat input to the combustion chamber as a surrogate for minimum stack gas flow rate prior to the execution of the previous CPT for DOC compliance purposes. Equations from EPA Method 19 (40 CFR Part 60 Appendix A Method 19) can be used to determine the stack gas flow rate (as dry standard cubic feet per minute corrected to 7% $O_2$). The basis for determining heat input and for using heat input as a surrogate for stack gas flow rate is presented in Appendix E. TAPI has replaced the heat input with total combustion air flow rate as a surrogate measure of stack gas flow rate.

### 4.2.2 Performance Testing for SVM and LVM

An MTEC was not developed for the other HWC MACT metals because the overly conservative assumption that all of these metals entering the combustion chamber is emitted through the stack (i.e., removal efficiency of 0%) may result in the exceedance of the MACT standards. As an alternative, TAPI will rely on performance testing for SVM and LVM emissions to demonstrate compliance with the MACT standard for these metals.

During the Comprehensive Performance Test, testing for emissions of SVM and LVM will be conducted under worst case operating conditions, including spiking of a representative metal from each volatility group. Detailed procedures for metals testing are presented in Section 6. The objective of the testing will be to demonstrate that the HWC MACT emission standards for these metal groups are met, and to establish a system removal efficiency (SRE) for each group based on the spiked metal feed rates and emission rates.

#### 4.2.3 Demonstration of Compliance with Metals Emissions Standards

Projected emission rates for mercury, semi-volatile and low-volatile metals have been calculated considering MTEC for mercury, and anticipated removal efficiencies for SVM and LVM based on the removal efficiency results from the 2006 CPT. These removal efficiencies will be verified during the CPT, and updated in preparing the Notification of Compliance to accompany the CPT Report. This information was used to select metal spiking rates which would not be projected to exceed HWC MACT limits.

As allowed by the HWC MACT regulations, TAPI wishes to feed representative SVM and LVM metals to the incinerators during the CPT and to establish feed rate limits for these metal groups by extrapolating upward from the test results. TAPI proposes to feed lead and chromium at a fraction of the maximum desired permit feed rates during the test. These metals are representative of the semivolatile and low volatility metal groups, respectively. Since these metals are representative of the metal volatility groups, the test data can be used to calculate a system removal efficiency (SRE) for each of these metals which can then be applied to their respective metal volatility group. System removal efficiency will be calculated using the following equation:

$$SRE = \left[ 1 - \frac{\dot{m}_{i,out}}{\dot{m}_{i,in}} \right] \times 100\%$$

where:

$\dot{m}_{i,in}$ = mass feed rate of metal i.

$\dot{m}_{i,out}$ = mass emission rate of metal i.

The calculated system removal efficiency for each metal volatility class can be used to establish feed rate limits for each group using the following equation:

$$\dot{m}_{i,in,\max} = \frac{\dot{m}_{i,out,MACT}}{\left(1 - \frac{SRE}{100}\right)}$$

where:

$\dot{m}_{i,in,\max}$ = maximum allowable feed rate of metal i.

$\dot{m}_{i,out,MACT}$ = mass emission rate of metal i at MACT regulatory limit.

Metals will be added to the waste feed as an aqueous solution of metal salts. Lead will be fed in the form of lead nitrate. Chromium will be fed in the form of sodium dichromate. Water soluble metal compounds are the most common form of the metals expected to be fed to the process, and were thus chosen as the feed form for the test.

The purpose of feeding only two metals, and for upward extrapolation from the test results, is to minimize the number and quantity of metals added to the incinerators solely for the purpose of demonstrating the maximum desired feed rate. TAPI has examined its waste characterization data (shown in Table 2-1) and has determined a desired feed rate limit for each metal volatility group. This level of spiking was chosen for the following reasons:

- Spiking at less than the maximum desired feed rate decreases the emissions associated solely with the CPT.
- Spiking at a reasonable fraction of the desired feed rate minimizes the degree to which test results will need to be extrapolated, thus eliminating inaccuracies which might be associated with a larger degree of extrapolation. TAPI has agreed with comments received from EPA to limit upward extrapolation to a factor of 2.0.
- The anticipated emissions resulting from the planned spiking rates should be detectable using the specified sampling and analytical methods so that an accurate system removal efficiency for both metals can be determined.

# 5.0 PERFORMANCE EVALUATION OF CONTINUOUS MONITORING SYSTEMS

This section presents the performance evaluation test plan for those continuous monitoring systems installed on Trane 1 and Trane 2 incinerators required to demonstrate compliance with MACT standards. In addition, the section provides a brief description of the continuous monitoring systems. The performance evaluation test plan for the continuous monitoring systems has been developed in accordance with 40 CFR §63.1207(c) and §63.8(e).

The continuous monitoring system installed on each of the two incinerators, including the common wet electrostatic precipitator (WESP), consists of a continuous parameter monitoring system and continuous emission monitoring system. The continuous parameter monitoring systems, referred to in this plan as the continuous monitoring systems (CMS) are discussed in Section 5.1. The continuous emission monitoring systems (CEMS) are discussed in Section 5.2.

## 5.1 CONTINUOUS MONITORING SYSTEM

A description of the incinerators' continuous monitoring systems and performance evaluation test protocols are presented below.

### 5.1.1 Description of CMS

Each incinerator is equipped with a number of sensors (temperature, gas flow, pressure differential, pH, water level, voltage, current etc.) to continuously monitor operating conditions at various points in the system. Signals from these sensors are transmitted to an I/O controller using 4-20 mA transmitter mounted close to the sensors. The signals received at the I/O controller are monitored and recorded by a central control system. The central control system constantly compares the operating conditions to preset operating conditions and makes appropriate adjustments to the incinerator operation, as required. Tables 5-1 and 5-2 present lists of process parameters monitored during the operation of the Trane 1 and Trane 2 units, respectively. The locations or these key monitors at the two incinerators are presented in Figure 5-1.

The temperature within the combustion chamber of each incinerator is measured at a location that best represents, as practicable, the bulk gas temperature in the combustion zone in accordance with 40 CFR §63.1207(f)(1)(xix). The temperature measurement location is shown in Figure 5-1 for Trane 1 and Trane 2 units.

Each incinerator is equipped with an automatic waste feed cutoff (AWFCO) system which will be activated when certain operating conditions are exceeded or when key monitoring devices fail. Flame out and power failure will also shut off waste feed. The emergency waste feed cut-off system will then be initiated, ensuring that the incineration of hazardous waste will cease and that the incinerator will operate in a "fail safe" mode. Table 5-3 and Table 5-4 present lists of key process control monitors interlocked with the automatic waste feed cutoff system for Trane 1 and Trane 2 units, respectively. The locations of these key interlocks are presented in Figure 5- 2. In the event of an equipment malfunction and the AWFCO system fails to stop the hazardous waste feed, the operator can manually stop the hazardous waste feed.

### 5.1.2 Performance Evaluation Testing

Performance evaluation testing of the CMS involves conducting a quality assurance test for sensors and/or transmitters. The testing will be performed according to the instrument manufacturer's specifications and procedures to ensure that the instruments continue to meet the manufacturer's specifications for precision and/or accuracy. The quality assurance test at a minimum involves checking for relative accuracy, calibration errors, zero drift, and span drift. The thermocouple sensors on each incinerator are accuracy-tested and pre-calibrated at the factory to user requirements or to standards using equipment traceable to U.S. National Institute of Science and Technology (NIST). Documentation in support of the quality assurance performed by the manufacturer will be included with the results of the CPT.

Procedures for implementation of the CMS performance evaluation are presented in Appendix E. Procedures conform to manufacturers' specifications. Testing will be completed no more than 30 days prior to commencement of the CPT. Thermocouples will be replaced with factory certified pre-calibrated units no more than 30 days prior to the CPT. Appendix E also includes a table for each incinerator listing each MACT-required CMS and providing pertinent information such as the unit ID, serial number, span, accuracy, calibration frequency, etc.

Data quality objectives for completeness of the data gathered from the CMS sensors and/or transmitters during the CPT is 100%. However, any deviation from this objective during the CPT that does not adversely impact the testing will be evaluated on a case-by-case basis.

Upon request, TAPI will grant EPA and EQB an opportunity for an onsite evaluation of system audit information including instrumentation calibration, data validation, and sample logging along with documentation of quality control data and field maintenance activities. Quality assurance procedures for TAPI's CMS system have been developed in accordance with the requirements of 63.8(d). Excerpts from

the plan which provide additional detail on the CMS quality assurance procedures are presented in Appendix E.

TAPI will test key AWFCO system interlocks on each of the two incinerators including the common WESP prior to commencement of the comprehensive performance test. Table 5-5 and Table 5-6, corresponding to Trane 1 and Trane 2 units, list each interlock to be tested and presents the set point at which the test will be conducted. The location of each interlock is presented in Figure 5-2. The waste feed cutoff system will also be tested for flame failure. Set points established for test purposes do not necessarily relate to actual operating conditions. Settings for interlocks during normal operation will be determined based on the results of the comprehensive performance test.

Set points for the automatic waste feed cutoff system will be on-line during the actual emissions testing during the CPT. However, AWFCO set points will be expanded during testing to prevent waste feed cutoffs during the tests. It is expected that expanding set points by no more than 10% during testing will avoid repeated waste feed cutoffs which would otherwise prevent successful completion of the CPT. It is anticipated that emissions standards will be achieved at the CPT operating conditions; thus, there is no intention to exceed emission standards during the CPT.

During the CPT, as during normal incinerator operations, facility operators routinely assess CMS performance. CMS output is presented graphically on the operator's console in the incinerator control room, which is constantly manned. Operators are trained to monitor CMS output and to recognize and identify trends that may indicate malfunction of incinerator equipment or of the CMS component itself. If malfunctioning equipment or CMS components are suspected, waste feed will be manually cutoff in accordance with the provisions of TAPI's Startup, Shutdown and Malfunction Plan.

## 5.2 CONTINUOUS EMISSION MONITORING SYSTEM

The Trane 1 and Trane 2 incinerators are equipped with a common WESP downstream of the units to ensure compliance with HWC MACT standards for particulate matter emissions. Exhaust gases from the WESP are directed to a single stack which is equipped with a continuous emission monitoring system (CEMS) for monitoring CO and $O_2$ emissions. A figure showing the location of the CEMS is presented in Appendix E.

### 5.2.1 Description of CEMS

The CEMS installed is a SICK MAIHAK Model S710. The SICK MAIHAK Model S710 Continuous Emissions Monitoring System is a modular gas analyzer designed for emission measurements. The

equipment is supported by an intelligent microprocessor control that provides fully automatic and low maintenance operation. The system integrates fully automatic calibration with test gas, and a self diagnostic, and internal watch-dog functions. A large LCD integrates a menu-driven operator interface which allows the CEMS operator to access and view multiple screens showing real-time data and system calibration data. Operator prompts and a HELP-screen guide the operator through set-up, configuration, operation and system maintenance.

The system includes two analyzers identified as UNOR and OXOR-P respectively. The module UNOR uses the NDIR-absorption principle of operation to determine the concentration of CO in a gas sample. The module OXOR-P is a precision oxygen analyzer that operates on the principle of a rotating diamagnetic dumbbell, which is suspended in an inhomogeneous magnetic field. The paramagnetic characteristic of oxygen exerts torque on the dumbbell which is proportional to the concentration of oxygen in the sample gas. The CO instrument has dual ranges 0 – 200 ppm and 0 – 3000 ppm. The $O_2$ instrument has a range of 0 – 25%. Both instruments meet the accuracy requirements of PS 4B.

Prior to the gas analyzers, the CEMS utilizes a dehumidification system to remove moisture from the gas sample, so that all monitoring results are reported on a dry gas basis.

The SICK MAIHAK Model S710 communicates via an RS232 protocol with the Nexus DAS Server. Through this interface, the gas analyzer continuously sends to the server, instantaneous measuring values of CO, $O_2$, and instrument status. The Nexus Server does the required computations, data storage, and interface communication with the Nexus DAS Client and Emerson PAS Server. In accordance with section 6.5.1 of Appendix to 40 CFR Part 63, Subpart EEE, the One-Minute averages for CO are the to be computed from the arithmetic average of reading taken at least every 15- seconds and must be calculated using the equation as specified in said Appendix's section. The TAPI system is currently configured to calculate one-minute averages using the arithmetic average of the most recent 6 10-second readings. This configuration meets the requirements of the HWC MACT regulations.

### 5.2.2 Performance Evaluation Testing

Prior to the CPT, performance evaluation testing of the CEMS will be performed in accordance with applicable requirements of Performance Specification 4B (40 CFR Part 60, Appendix B). Testing will include a Relative Accuracy Test Audit (RATA), an Interference Response Test, Calibration Drift, Calibration Error and Response Time tests. Detailed procedures for conducting the performance evaluation are presented in a work plan which has been Included in Appendix E. Performance evaluation testing of the CEMS will be completed no more than 30 days prior to commencement of the CPT.

Quality assurance procedures for TAPI's CEM have been developed in accordance with the requirements of 40 CFR Part 63.1209(a)(2) and 63.7(c). Excerpts from the plan which provide additional detail on the CMS quality assurance procedures are presented in Appendix E. Further details on procedures for conducting the performance evaluation are presented in a work plan which was submitted to EQB for approval under separate cover prior to conducting the CPT in 2006.

# 6.0 TEST SCHEME

The Comprehensive Performance Test (CPT) is designed to demonstrate that the two incinerators are capable of meeting all applicable MACT emission standards under worst-case waste feed and operating conditions. The CPT Plan described below has been developed in accordance with 40 CFR §63.1207(f)(v) through (vii). During each test, the waste feed, stack gas, auxiliary fuel, make-up water, venturi scrubber feed water and venturi scrubber blowdown will be sampled, as appropriate, in accordance with the program described in Section 7.

The CPT will consist of a single test condition, comprised of three replicate runs. The objective of the test is to demonstrate that the Trane 1 and Trane 2 incinerators, operating simultaneously, will meet HWC MACT standards for Dioxin & Furans, CO, particulate matter, $HCl/Cl_2$, and metals. Details on the proposed test are provided in Section 6.3.

## 6.1 PREPARATION OF WASTE FEED

The waste feed for the CPT runs will consist of a mixture of normal waste, metals, methylene chloride, and sodium chloride. Characteristics of normal waste feed are presented in Tables 2-1 through 2-3. In calculating average concentrations, the detection limit was used for any constituent not detected in a waste feed samples, as appropriate. Table 6-1 provides a summary of the anticipated waste feed characteristics for the CPT. The composition of the waste feed may be modified based on preliminary testing or other information gathered prior to the CPT.

MSDSs for organic and inorganic compounds to be spiked into the waste feed during the CPT are presented in Appendix E.

### 6.1.1 Spiking Procedures

Spiking is the process where various materials are introduced into the waste feed stream to obtain the desired inlet concentrations for conducting a performance test. The key to a successful spiking program is having both accurate analysis of the spiking materials and accurate measurements of the material spiking rates.

All spiking materials will be delivered to the site in "ready to use" forms. Each lot of material will be supplied with a Certificate of Analysis (COA).

Onsite, a drum of each material will be connected to the suction side of an injection feed pump. The pumps will continuously discharge the materials into the waste feed stream. Drums are placed on scales to record the loss in weight over time, which is used to determine the spiking rate. A Data Acquisition Computer (DAC) acts as an interface as well as a data recorder.

At TAPI, both of the two incinerators are fed the same wastes coming from common feed tanks. Two waste feed lines (one for aqueous waste, and one for organic waste) lead from the waste storage tanks. During the CPT, ash will be spiked into one of the two waste feed lines at a location prior to the waste feed pump. The metals and methylene chloride will be spiked into one of the two waste feed lines close to the gun at each of the two incinerators. Figure 6-1 shows the conceptual locations of the spiking system.

Using the real time data collected during each test scenario and detailed hand written logs, a final report with accurate and traceable spiking rates for each test run will be generated and submitted for inclusion into the test report. This approach allows for a more precise spiking rate to be achieved and validated, compared to other techniques of introducing spiking components into a system. In calculating feed rates to the incinerators, the spiking rates of each compound will be added to the amount in the unspiked feed which will be determined by sampling and analysis of the unspiked feeds during the CPT.

Waste feed spiking will be conducted by Engineered Spiking Solutions (ESS) of Houston, Texas. A copy of the ESS' spiking SOPs and Quality Assurance Manual is presented in Appendix E.

### 6.1.2 Waste Feed Selection for POHC Emissions and DRE Determination

This section has been removed from Revision 5.0 of the CPT Plan. During 2006, TAPI demonstrated a DRE greater than 99.99% for both chlorobenzene and 1,2-dichlorobenzene. That previous DRE data is being submitted (See Appendix F) as data in-lieu of testing in accordance with 40 CFR 63.1207(c)(2)(iii) and 40 CFR 63.1207(c)(2)(iv).

### 6.1.3 Waste Feed Selection for Particulate Emission Determination

The waste feed selected for demonstrating compliance with particulate emission standards should have the greatest potential to generate particulate matter (i.e., the material having the highest ash content). If the emission standard is achieved for the waste feed at the elevated ash concentration (and thus the highest potential particulate emissions), it can be concluded that feeding a waste containing a lower concentration of ash will also achieve the emission standard under the same operating conditions.

During each run of the CPT, the waste feed ash content to the incinerator will be approximately 226 lbs/hr (equivalent to approximately 6% ash content by weight). This feed rate of ash is higher than would be

expected in normal waste feed. To ensure that the target loading of ash is achieved, sodium chloride will be spiked into the waste feed. Sodium chloride is a suitable particulate surrogate because it will result in worst case fine particulate loading to the air pollution control equipment and will maximize the dissolved solids concentration in the quench and scrubber water which may also contribute to worst case particulate emission conditions.

### 6.1.4 Waste Feed Selection for Hydrogen Chloride/Chlorine Emission Determination

The feed selected for demonstrating compliance with $HCl/Cl_2$ emissions should have a total chloride (organic and inorganic) feed rate which exceeds feed rates to be expected under normal operating conditions. If the HWC MACT emission standard is achieved for the waste feed at the elevated chloride concentration (and thus the highest potential $HCl/Cl_2$ emissions), it can be concluded that feeding waste with a lower chloride concentration will also achieve the HWC MACT standard for $HCl/Cl_2$ emissions under the same operating conditions.

During the CPT, total chloride will be fed to the incinerators at levels higher than would be expected in normal waste feed. This maximum total chloride feed rate to the incinerator is required to demonstrate both compliance with dioxin/furan emission standard and compliance with the $HCl/Cl_2$ emission standard.

Methylene chloride will provide the source for organically bound chlorine while sodium chloride (ash) will provide the source of inorganic chloride for the CPT. Methylene chloride feed rates during the CPT are provided in Table 6-1. Sodium chloride blended into the waste feed for increasing ash content as described in Section 6.1.3 will also contribute maximum chloride loadings to each incinerator. The total planned chlorine/chloride feed rate to each incinerator is approximately 241 lb/hr.

To ensure that the target loading of total chloride is achieved, methylene chloride and sodium chloride will be spiked into the waste feed during the test.

### 6.1.5 Waste Feed Selection for Metals Emission Determination

During the CPT, the waste feed will be spiked with an elevated concentration of lead and chromium, to represent the SVM and LVM metal volatility groups, respectively. Metal concentrations will be measured in the stack gas to demonstrate compliance and to calculate removal efficiencies. Metal removal efficiency will be used to extrapolate the CPT results upward in developing SVM and LVM feed rate limits for demonstrating continuing compliance with the HWC MACT standards.

Metals to be spiked into the waste feed have been selected to resemble as closely as possible the form that the metal takes in the actual waste (water-soluble salts). The table below identifies the metal

compounds to be spiked. Lead and chromium will be spiked at concentrations required to demonstrate system removal efficiencies for each metal. Appendix C includes calculations demonstrating that the metals can be detected in the stack gas at the concentrations anticipated after considering the assumed removal efficiencies.

| Metal | Spiked Compound |
|---|---|
| Chromium | Sodium dichromate [$Na_2Cr_2O_7$] |
| Lead | Lead nitrate [$Pb(NO_3)_2$] |

Selection of the metallic compounds is based on its solubility in water and commercial availability.

### 6.1.6 Waste Feed Selection for Measurement of Products of Incomplete Combustion

This section has been removed from Revision 5.0. Risk Assessment data gathering is not required, as TAPI has already conducted a Risk Assessment and has received a letter from EPA stating that since TAPI has demonstrated compliance with previous HWC MACT emission standards, that the operation of the TAPI incinerators would pose no unacceptable risk to human health and the environment.

## 6.2 PRELIMINARY TESTING

Prior to initiation of the CPT, preliminary tests may be conducted on the incinerators. The objective of any preliminary tests would be to demonstrate that the units are operationally ready for the CPT, and that the planned operating conditions and spiking protocols are appropriate to demonstrate performance with the applicable HWC MACT standards. Preliminary testing will be conducted within the operating conditions described in this CPT Plan, and any sampling and/or analytical procedures will represent a subset of the procedures described in this CPT Plan.

| Waste Feed Characteristics | Target |
|---|---|
| Physical State | Liquid |
| Aqueous Waste Flow Rate (liters/min) each incinerator | 12.8 |
| Organic Waste Flow Rate (liters/min) each incinerator | 4.7 |
| Total Chlorine/Chloride Feed Rate (lb/hr) each incinerator | 241 |
| Ash Feed Rate (lbs/hr) each incinerator | 226 |

The incinerators will be operated under steady state conditions, especially with respect to operating temperature and air flow. The target operating conditions for each incinerator during the test are tabulated

below. These operating conditions are consistent with the current Documentation of Compliance (DOC) but may be modified prior to implementation of the test, if warranted based on preliminary testing.

| Parameters | Operating Conditions |
|---|---|
| Minimum combustion chamber temperature | 1,014 °C |
| Maximum total combustion air flow rate | 1,627 scfm |
| Maximum CO emissions 7% $O_2$) | 100 ppm |
| Minimum quench tank pH | 7.4 |
| Minimum quench tank blowdown flow rate | 26.7 lpm |
| Minimum quench tank water level | 38.7 inches |
| Minimum venturi blowdown rate | 2.4 gpm |
| Minimum venturi scrubber pressure drop | 61.9 inches of $H_2O$ |
| Minimum venturi scrubber recycle liquid flow rate | 263 lpm |
| Minimum venture scrubber recycle liquid pH | 6.7 |
| Minimum separator tank liquid level | 40.1 inches |
| Minimum secondary power input to the WESP | 5.6 kW |

Stack gases will be monitored for CO and $O_2$ by Continuous Emission Monitors (CEMs). In addition, stack gas velocity, moisture and temperature will be determined. Sampling and analysis of the various streams will be conducted in accordance with methods specified in Section 7 of this plan.

### 6.3 DESCRIPTION OF COMPREHENSIVE PERFORMANCE TEST

As described earlier in this section, the CPT will consist of a single test condition, comprised of three replicate runs. The test is designed to demonstrate compliance with HWC MACT standards for Dioxin/Furans, CO, particulate matter, HCl/$Cl_2$, and metals emissions while both Trane 1 and Trane 2 incinerators are operating simultaneously under conditions of maximum waste feed rate, maximum ash feed rate, maximum total chlorine/chloride fed rate, maximum combustion gas flow rate, and minimum combustion temperature. In addition, the test will determine system removal efficiency for SVM and LVM metals.

Both incinerators are identical. As such, each incinerator will have identical operating parameter limits. The reason for operating both incinerators simultaneously during the test is that they share a common WESP for final particulate matter and metals control. A maximum flow rate of combustion gases through the WESP is necessary to demonstrate particulate matter and metals performance. In the future, TAPI may operate both incinerators together or may operate only one incinerator at any given time. When only a single incinerator is operating, only half of the maximum particulate matter and metals loading will be

delivered to the WESP and only half of the maximum combustion gas flow rate will be experienced in the WESP. Therefore, conducting the CPT with both incinerators operating simultaneously is a "worst case" scenario, and future operations with either one or both incinerators operating will always represent operations that are equal to or are more conservative than those demonstrated during the CPT. A description of the proposed test is provided below.

The objectives of the test are to demonstrate that the combined operation of Trane 1 and Trane 2 incinerators is capable of: (1) containing particulate emissions below 29 mg/dscm (0.013 gr/dscf) corrected to 7% oxygen; (2) containing $HCl/Cl_2$ emissions below 32 ppmv, combined emissions, expressed as chloride ($Cl^-$) equivalents, dry basis and corrected to 7% oxygen; (3) containing the combined emissions of the semivolatile metals lead and cadmium below 230 ug/dscm corrected to 7% oxygen; (4) containing the combined emissions of the low volatility metals arsenic, beryllium, and chromium below 92 ug/dscm, corrected to 7% oxygen; (5) containing dioxins/furans emissions below 0.4 ng TEQ/dscm corrected to 7% oxygen; and (6) containing CO emissions under 100 ppmv corrected to 7% oxygen. In addition, the test will confirm compliance with the mercury MTEC through feed analysis of mercury and continuous monitoring of the total combustion air and the stack gas flow rate during the test, (as specified in the waiver request in sections 4.2 and 4.2.1 of this plan). Finally, the test will determine the system removal efficiency for SVM and LVM in the waste feed.

The test will consist of three replicate runs, each with a minimum sampling duration of three hours. The waste feed will consist of a mixture of normal waste, methylene chloride, sodium chloride, and metals. Methylene chloride will be spiked into the waste feed at rates to ensure target organic chloride loading is achieved. To ensure target ash loading are met, the waste feed will be spiked with a sodium chloride solution to increase the ash content. The waste feed will be spiked with two metallic compounds - sodium dichromate, and lead nitrate. Aqueous solutions of the compound will be continuously injected into the waste feed lines of both incinerators using separate, dedicated equipment (storage vessels, pumps, valves, etc.). The flow rate of the metal solution to each incinerator will be continuously monitored during spiking.

In order to ensure that ash and metal concentrations in the scrubber water achieve steady state conditions prior to commencement or sampling, the incinerators will be preconditioned by initiating spiking of metals and ash prior to each run. A preconditioning time of 60 minutes is expected to be adequate based on TAPI's experience with system startup and on the results of previous testing.

### 6.4 PROPOSED CPT OPERATING CONDITIONS

Proposed operating conditions for the Trane 1 and Trane 2 incinerators are based upon historical operation of the unit as well as the successful achievement of applicable performance standards during the 2006 CPT.

Table 6-2 summarizes the proposed operating conditions for the CPT. It should be emphasized that these conditions represent worst case operating conditions during the CPT and do not necessarily reflect normal operating conditions. Operating conditions included in Table 6-2 are consistent with the current Documentation of Compliance (DOC), but may be modified prior to the CPT, if warranted by preliminary testing.

Key operating parameters associated with the combustion chamber and the air pollution control equipment, which will be continuously monitored during the CPT are presented below. A detailed description of the continuous monitoring system, including the locations is presented in Section 5.

**Combustion Chamber**: Minimum combustion chamber temperature and maximum flue gas flow rate (or an appropriate surrogate) will be maintained during the CPT while demonstrating compliance with dioxin/furan emissions, and the CO emission standard. In addition, maximum flue gas flow rate (or an appropriate surrogate) are required while demonstrating compliance with the particulate matter, $HCl/Cl_2$, and metals emissions standards. Finally a minimum flue gas flow rate (or an appropriate surrogate) is used for compliance with the mercury MTEC. TAPI uses the total combustion air flow rate as a surrogate for flue gas flow rate, as described in Section 4. Also, hazardous waste feed rate to the combustion chamber will be maximized during the CPT. Each of these combustion chamber parameters will be continuously monitored on a 60 minute rolling average basis.

A CMS for combustion chamber pressure is provided in each combustion chamber to ensure safe operations. However, a maximum operating limit and AWFCO are not required under HWC MACT regulations since the unit is totally sealed, thus preventing combustion system leaks in accordance with §63.1206(c)(5).

To ensure proper operation of the waste firing system, a minimum limit has been established for hazardous waste atomization air pressure, and a maximum waste feed viscosity has been set.

**Quench Tank**: Due to the configuration of the liquid recirculation system at both Trane 1 and Trane 2, a combination of quench tank, venturi scrubber, and separator tank operating parameters is required to control the solids content in the liquid recirculation system. The quench tank and venturi blowdown

controls solids content in the liquid recirculation system. In addition, the quench tank prevents solids re-entrainment by maintaining a minimum liquid level in the tank. The venturi scrubber operating limit required for solids control is discussed below. During the CPT, minimum quench tank blowdown and minimum quench tank water level will be maintained. Consequently, both quench tank blowdown and quench tank water level will be continuously monitored during the test.

Since the Trane 1 and Trane 2 units are not equipped with a packed tower, the quench tank, in combination with the venturi scrubber, are the control devices for $HCl/Cl_2$ emissions. $HCl/Cl_2$ emissions are controlled at the quench tank and the venturi scrubber by adjusting the quench tank water pH and venturi scrubber liquid pH using caustic soda.

During the CPT quench tank pH and the venturi scrubber liquid pH will be continuously monitored and recorded during each run.

MACT standards do not specify any operating conditions for the quench tank. However, TAPI will establish operating limits on the quench tank pH, quench tank blowdown and quench tank water level based on the results of the CPT. These parameters will be continuously monitored on a 60 minute rolling average. The venturi scrubber operating limit required for $HCl/Cl_2$ emissions control is discussed below.

**Venturi Scrubber**: The venturi scrubber, in combination with the quench tank and separator, controls the solids content in the liquid recirculation system by maintaining a minimum venturi scrubber blowdown. Minimum venturi scrubber pressure drop, minimum liquid flow rate, minimum scrubber blowdown, and minimum separator tank water level will be maintained during each test run. In addition, minimum venturi scrubber liquid pH will be maintained throughout the test. Therefore, venturi scrubber pressure drop, liquid flow rate, liquid pH, blowdown rate, and separator tank liquid level will be monitored continuously during the CPT.

MACT standards require continuous monitoring of the minimum pressure drop across the venturi scrubber, minimum scrubber water flow rate, minimum venturi scrubber blowdown, and minimum liquid pH in accordance with 40 CFR 63. 1209(m)(1)(i) and applicable sections of §63.1209(l), (m), (n), and (o). The parameters are monitored on a 60 minute rolling average.

The venturi scrubbers are not equipped with dedicated liquid collection tanks. The water recirculation system on each incinerator is configured in such a way that water from the venturi is collected in the separator tank which is functionally equivalent to a venturi liquid collection tank. Appendix E contains an alternative monitoring application in accordance with §63.1209(g) to allow monitoring of liquid level in the

separator tanks in lieu of monitoring of liquid levels in venturi scrubber tanks. This alternative monitoring application had been previously approved, thus the separator tank liquid level is used for compliance monitoring.

**Wet Electrostatic Precipitator (WESP)**: Minimum secondary power input to the WESP will be maintained while demonstrating compliance with particulate emissions under worst case conditions of maximum ash loading and maximum flue gas flow rate.

MACT standards do not specify any operating conditions for the WESP. Letters from the WESP manufacturer explaining the rationale of setting the WESP secondary power input as an operating condition are presented in Appendix E. The criterion used by the manufacturer is to apply 1,000 W per 1,000 acfm entering the WESP. Since the total air flow is estimated at 4,000 acfm, the minimum secondary power input has been established as 4 KW. However, TAPI will establish operating limits on the minimum secondary power input based on the results of the CPT. The parameter will be continuously monitored on a 60 minute rolling average.

The WESP is designed to "clean" captured particulate matter from the unit through a continuous downward flow of water. The unit does not undergo discrete cleaning cycles as a dry WESP or fabric filter does. Therefore, particulate testing complies with the provisions of§63.1207(g)(1)(i)(C) which requires that testing be conducted when the particulate matter control device undergoes its normal cleaning cycle.

## 6.5 POST-CPT OPERATING CONDITIONS

During the period immediately following the CPT, through the submission of Notification of Compliance (NOC), the Trane 1 and Trane .2 incinerators will operate in accordance with waste feed limitations and operating conditions presented in either the Document of Compliance (DOC) or the RCRA permit, whichever is more stringent. Automatic waste feed cutoff interlocks will be set to ensure compliance with applicable operating limits.

## 6.6 TEST SCHEDULE

A proposed performance test schedule is given in Table 6-3, in accordance with 40 CFR §63.1207(f)(I)(v). In addition to field sampling activities conducted during the CPT, pre-test and post-test activities directly related to the CPT are also addressed. The approximate duration over which a set of activities will be conducted is also indicated in the table. Since the proposed schedule is dependent upon many factors, it should be understood that field conditions may necessitate modification of the schedule. The date for

conducting the CPT will be set upon approval of this Plan by EPA and EQB but will not commence later than April 29, 2011, without prior approval from EQB and/or EPA.

A detailed sequence of sampling train operations, typical of a test run, is presented in Table 6-4.

# 7.0 SAMPLING AND MONITORING PROCEDURES

This section provides a detailed description of sampling and monitoring procedures to be implemented during the Comprehensive Performance Test (CPT). Sampling and monitoring procedures discussed below are common to both Trane 1 and Trane 2 incinerators and therefore, will not be repeated for each incinerator. Included are descriptions of sampling and monitoring locations within each incinerator system, equipment to be used, frequency of sampling and monitoring, and proposed analytical procedures for sample analysis. Table 7-1 summarizes the sampling program that will be utilized for both incinerators. Table 7-1 provides sampling program details such as sampling stream, sampling parameters and sampling frequency. Tables 7-2 through 7-4 present a summary of parameters to be measured as well as the sampling and analytical methods to be used for each sampling stream. All sampling point locations are presented in Figure 7-1. All sampling and analytical procedures that are described in this plan are EPA-approved methods. Equivalent EPA-approved methods for sampling and analysis may be substituted, if deemed necessary. The specific references for these methods are provided in a list accompanying Table 7-2. SOPs for sampling and analysis activities as required under this plan are presented in Appendix E.

## 7.1 WASTE FEED SAMPLING AND ANALYSIS

All waste feed samples will be collected from a sampling tap in accordance with EPA Sampling Method S004 (USEPA, 1984), or equivalent. The tap will be located in the feed line to each incinerator at a point upstream of the metering pump feed system to be used for spiking. Sampling and analysis methods for each parameter are summarized below. For each test, grab samples of the waste feed will be taken at 15 minute intervals during each of the three runs. Grab samples will be composited at the completion of each run and analyzed. The QA/QC Plan presented in Appendix D provides information regarding container size, preservation, sample holding time, chain of custody, quality control checks, quality assurance requirements, etc. TAPI's SOP for collection of liquid samples from a tap is included in Appendix E. Analytical methods will conform to the requirements of 63.1208(b)(8), as applicable.

**Ash Content** - The composited sample for each test will be analyzed for ash content according to ASTM Method D-482, or equivalent.

**Higher Heating Value** - The composited sample will be analyzed to determine the higher heating value of the waste feed as per ASTM Method D-240 or equivalent.

**Viscosity** - The viscosity of the waste feed will be determined by analyzing the composited sample as per ASTM Method D-445 or equivalent.

**Moisture Content** - The moisture content of the waste feed will be determined by analyzing the composited sample Karl Fischer method.

**Density** - The density of the waste feed will be determined by analyzing the composite sample as per ASTM Method D-1963 or equivalent.

### 7.2 STACK GAS SAMPLING AND ANALYSIS

Stack gas will be sampled for dioxins/furans, particulate matter, $HCl/Cl_2$, and metals during each run of the CPT. Stack gas concentrations of $O_2$ and CO will be monitored by CEMS during the test. During each test, stack gas will also be sampled for stack gas flow velocity, temperature, and moisture content. The locations of existing sampling ports are presented in the figure in Appendix E. Additional sampling ports may be installed to allow simultaneous operation of all planned sampling trains.

Figure 7 -2 shows a diagram of the proposed isokinetic sampling process, which was prepared by the test contractor in accordance with the procedures set forth in Method 2.

More than one sampling train will be used at one time. A proposed stack gas sampling sequence is presented in Table 6-4.

Cyclonic flow will be evaluated by the test contractor in accordance with EPA Method 1.

The monitoring program during the CPT for the different types of constituents in the stack gas samples is described below:

**Dioxins/Furans** – In accordance with 40 CFR 63.1208(b)(1)(i)(B), TAPI is requesting to utilize EPA Method 23 for PCDD/PCDF sampling rather than using SW-846 Method 0023A. During TAPI's 2006 CPT (which used SW-846 Method 0023A), the PCDD/PCDF emissions were substantially below the HWC MACT emission standard, very low levels of PCDD/PCDF were detected in the front half of the sampling train, and the nature of TAPI's wastes, and the configuration of its emission control equipment are unlikely to produce carbonaceous particulate matter, such as might be found in coal-fired boilers or sources equipped with activated carbon injection. PCDD/PCDF data from previous testing are included in Appendix F. PCDD/PCDF sampling will be conducted while feeding total chlorine/chloride at the maximum rate.

During each run of the CPT, PCDD/PCDF sampling will be conducted for a mininum duration of three hours, and a minimum sample volume of 2.5 dscm will be collected. Accordingly, any PCDD/PCDF congeners which are not detected in the analysis will be assumed to be present at zero concentration.

Gas samples are drawn isokinetically into the sampling train using a glass-lined probe. The gaseous emissions are passed through a particulate filter (glass fiber filter) and a condenser before collecting the PCDD and PCDF on a packed column of adsorbent material (XAD-2 Resin). The PCDD's and PCDF's are extracted from the resin, separated by high resolution gas chromatography, and measured by high resolution mass spectrometry. PCDD/PCDF samples will be analyzed using SW-846 Method 8290A and the analytical procedures specified in EPA Method 23. Additional analytical information is presented in Appendix E.

**Particulate Matter, Hydrogen Chloride, and Chlorine** - Stack sampling of particulate matter, hydrogen chloride and chlorine gas emissions will be performed on a combined sampling train. The minimum sampling duration for each test will be two hours per run. Sampling will be conducted in conformance with EPA Method 26A (40 CFR Part 60 Appendix A). The schematic of the sampling train, and sampling operations are described in Appendix E. The stack sample will be analyzed for particulate matter gravimetrically. $HCl/Cl_2$ analysis will be conducted using ion chromatograph as per SW-846 Method 9057.

**Metals** - Metals will be sampled in the stack gas for a minimum duration of two hours per test run using a multiple metals sampling train in accordance with EPA Method 29 (40 CFR Part 60 Appendix A). The sampling train configuration, sampling train operations, and analytical procedures are presented in Appendix E. Since TAPI is complying with the HWC MACT mercury standard using MTEC, the Method 29 sampling train will be used for the collection of the metals As, Be, Cd, Cr, and Pb.

**Stack Gas Flow Rate and Moisture** - Stack gas flow rate and moisture content will be determined for each isokinetic sampling train (M23, M26A, and M29) using EPA Methods 2, 3, and 4, which are inclrporated into the operation of those isokinetic sampling trains, by reference. The stack gas flow rate will be used for each of the test runs in determining isokinetic variation and in calculating emission parameters. Moisture content will be used to calculate dry gas volumes and flow rates for each of the test runs. The stack gas velocity and the stack gas volumetric flow rate will be determined according to Method 2. Stack gas oxygen, carbon dioxide, and molecular weight will be determined according to Method 3A, Moisture in the stack gas is determined according to Method 4.

**CO and $O_2$ Concentrations** - CO and $O_2$ will be analyzed during the CPT using the Continuous Emission Monitoring System (CEMS) installed at the facility. The CEMS will be operated in accordance with the Performance Specification 4B (40 CFR Part 60 Appendix B).

### 7.3 LIQUID STREAM SAMPLING AND ANALYSIS

During the CPT, venturi scrubber blowdown will be sampled at both Trane 1 and Trane 2 incinerators. Samples will be collected from taps located on the venturi scrubber blowdown line in accordance with Method S004. Grab samples will be collected at 15 minute intervals and will be composited for each run prior to analysis. Venturi scrubber blowdown samples will be analyzed for total chlorides (ASTM Method E-4427 or SW-846 Method 9056A, or equivalent), ash (ASTM D-482, or equivalent) and total solids (EPA Method 160.3). Sampling of total solids in the venturi scrubber blowdown will be conducted for informational purposes only. Data will not be used to demonstrate compliance with MACT standards.

### 7.4 SAMPLING AND ANALYSIS OF OTHER FEED MATERIALS

**Auxiliary Fuel** - Kerosene, which is the auxiliary fuel for both Trane 1 and Trane 2, will be sampled once prior to the CPT by tap sampling, in accordance with EPA Sampling Method S004. The collected sample will be analyzed for ash content, chlorides and metals. Analytical methods for metals testing are presented in Table 7-2. Like the feed rates of the waste streams, the kerosene feed rate is continuously monitored and recorded.

**Makeup Water** - The makeup water is used to replenish the water lost due to evaporation and to maintain the minimum quench and separator water depth requirement. Makeup water samples will be collected once at the beginning of each run, from a tap in accordance with Method S004. The makeup water will be analyzed for total chlorides and total solids (analytical methods listed in Table 7-2). Sampling of total solids in the makeup water will be conducted for informational purposes only. Data will not be used to demonstrate compliance with MACT standards.

Spiking Materials - The spiking materials are introduced into the waste feed stream to obtain the desired inlet concentrations for conducting a performance test. Samples of spiking materials will be collected once at the beginning of each run, from a tap in accordance with Method S004. The sodium chloride and methylene chloride spiking solutions will be analyzed for total chlorides, the lead spiking solution will be analyzed for lead, and the chromium spiking solution will be analyzed for chromium (analytical methods listed in Table 7-2). Sampling of spiking materials will be conducted for confirmation purposes only.

### 7.5 QUALITY ASSURANCE/QUALITY CONTROL

All sampling and analysis will be conducted in accordance with QA/QC procedures explained in the Quality Assurance/Quality Control Plan provided in Appendix D of this document.

### 7.6 FUGITIVE EMISSIONS DETECTION

Both Trane 1 and Trane 2 incinerators have been designed to minimize fugitive emissions by keeping the combustion zone totally sealed. To ensure that the design measures are successful, a visual inspection will be conducted before each test in the vicinity of all incinerator process equipment (e.g., pumps, valves, flanges, pressure relief devices, sampling connection systems). The inspection procedure will follow the methodology for Visual Determination of Fugitive Emissions, which is presented in 40 CFR Part 60, Appendix A, Test Method 22. This test method presents certain visual observation procedures which will be utilized in examining each potential source of fugitive emissions at the incinerators and includes forms to be used to record these observations. Fugitive emission monitoring will also comply with applicable provisions of 40 CFR 264 Subpart BB. In the event that these inspections reveal that one or more sources of fugitive emissions are present, incinerator shutdown procedures will be initiated and immediate corrective measures will be taken to repair and eliminate each source of emissions.

### 7.7 COMPREHENSIVE PERFORMANCE TEST DATA REPORTING

The results of the CPT will be included in the Notification of Compliance (NOC) to be submitted to EPA in accordance with 40 CFR 63.1207(j), 63.1210(b), 63.9(h), 63.10(d) and (e), 63.7(g), 63.8(e)(5) and Rules 106(D) and 103(C) & (D) of the RCAP. All raw data as well as all quality control (QC) data necessary to check the calculations will be submitted. In addition to the CPT results, the NOC will include results of CMS performance evaluation, test methods, operating limits, procedures used for identifying the operating parameter limits, and other information documenting compliance with operating requirements.

## 8.0 REFERENCES

A.T. Kearney. 1988. Trial Burn Test Report for the Incinerators at SK&F Lab Co.

Brunner, Calvin R. 1991. Handbook of Incineration Systems, McGraw-Hill, Inc., New York.

ERM-Panzardi. 2003. Preliminary Human Health Risk Assessment, Chemsource Corporation, Guayama, Puerto Rico,

Perry, R.H. and D, Green, 1984, Perry's Chemical Engineer's Handbook, Sixth Edition, McGraw Hill, Inc.

U.S, Environmental Protection Agency (USEPA), 1983. Guidance Manual for Hazardous Waste Incinerator Permits, SW-966, Office of Solid Waste and Emergency Response, Washington, D,C.

U,S. Environmental Protection Agency (USEPA), 1984, Sampling and Analysis Methods for Hazardous Waste Combustion, EPA-600/8-84-002, Arthur D. Little, Inc., Cambridge, Massachusetts.

U.S. Environmental Protection Agency (USEPA). 1986, Test Methods for Evaluating Solid Waste: Physical/Chemical Methods, EPA SW-846, third edition,

U.S. Environmental Protection Agency (USEPA), 1989a, Handbook' Guidance on Setting Permit Conditions and Reporting Trial Burn Results, EPA/625/6-89/0 19, Office of Solid Waste and Emergency Response, Washington, D,C.

U.S. Environmental Protection Agency (USEPA), 1989b. Guidance on Metals and Hydrogen Chloride Controls for Hazardous Waste incinerators, Office of Solid Waste and Emergency Response, Washington, D,C.

U.S, Environmental Protection Agency (USEPA), 1994, Exposure Assessment Guidance for RCRA Hazardous Waste Combustion Facilities, Draft. EPA530-R-94-021, Office of Solid Waste and Emergency Response, Washington, D.C.

U.S. Environmental Protection Agency (USEPA), 1996, Guidance for Total Organics, Draft Final Report, EPA/6001R-96/036, National Exposure Research Laboratory, Research Triangle Park, North Carolina.

**TABLES**

**Table 2-1. Aqueous Waste Feed Characteristics**

| Parameter | Units | Value | | | Analytical Method |
|---|---|---|---|---|---|
| | | Min | Max | Average[1,2] | |
| Arsenic | mg/l | ND (0.04) | 1.44 | 0.05 | SW-846 6010B |
| Beryllium | mg/l | 0.005 | 0.011 | 0.006 | SW-846 6010B |
| Cadmium | mg/l | 0.005 | 0.05 | 0.0085 | SW-846 6010B |
| Chromium | mg/l | 0.139 | 21.1 | 3.53 | SW-846 6010B |
| Lead | mg/l | 0.005 | 1.06 | 0.038 | SW-846 6010B |
| Mercury | mg/l | 0.00001 | 0.331 | 0.0152 | EPA 245.1 |
| Heating Value | Btu/lb | 100 | 8,126 | 1,538 | ASTM D-240 |
| Viscosity | Centipoise | 0.8 | 2.8 | 1.1 | ASTM D-445 |
| pH | SU | 4.0 | 11.3 | 7.4 | SW-846 9045C |
| Specific Gravity | | 0.9 | 1.1 | 1.01 | ASTM D-4052 |
| Ash Content | % | ND (0.001) | 14.5 | 2.26 | ASTM D-482 |
| Total Chloride Content | % | 0.0001 | 7.3 | 1.5 | ASTM D-808 |

1. Average calculated using the full detection limit.
2. TAPI assumes the analyte is present at the full detection limit, if not detected.

**Table 2-2. Organic Waste Feed Characteristics**

| Parameter | Units | Value | | | Analytical Method |
|---|---|---|---|---|---|
| | | Min | Max | Average[1,2] | |
| Arsenic | mg/l | 0.001 | 0.10 | 0.02 | SW-846 6010B |
| Beryllium | mg/l | 0.005 | 0.10 | 0.009 | SW-846 6010B |
| Cadmium | mg/l | 0.005 | 0.10 | 0.01 | SW-846 6010B |
| Chromium | mg/l | 0.081 | 2.97 | 0.956 | SW-846 6010B |
| Lead | mg/l | 0.005 | 0.1 | 0.018 | SW-846 6010B |
| Mercury | mg/l | 0.000001 | 0.0095 | 0.0010 | EPA 245.1 |
| Heating Value | Btu/lb | 9,234 | 14,389 | 11,616 | ASTM D-240 |
| Viscosity | Centipoise | 0.54 | 2.77 | 1.30 | ASTM D-445 |
| pH | SU | 2.0 | 9.4 | 5.4 | SW-846 9045C |
| Specific Gravity | | 0.8175 | 0.9024 | 0.8678 | ASTM D-4052 |
| Ash Content | % | 0.001 | 0.739 | 0.126 | ASTM D-482 |
| Total Chloride Content | % | ND (0.01) | 1.06 | 0.17 | ASTM D-808 |

1. Average calculated using the full detection limit.
2. TAPI assumes the analyte is present at the full detection limit, if not detected.

**Table 2-3. Organic Hazardous Air Pollutants Expected in Waste Feed**

| Chemical | Approximate Quantification[1,2] | Analytical method |
|---|---|---|
| Methanol | ND – 6.5% | SW-846 8260 |
| Methylene Chloride (Dichloromethane) | ND – 0.8% | SW-846 8260 |
| Toluene | ND – 5.1% | SW-846 8260 |
| Acetonitrile | ND – 4.1% | SW-846 8260 |
| Methyl ethyl ketone (2-Butanone) | ND – 3.1% | SW-846 8260 |
| Methyl isobutyl ketone (4-Methyl-2-Pentanone) | ND – 0.5% | SW-846 8260 |
| Methyl tert butyl ether (MTBE) | Trace[3] | SW-846 8260 |
| n-Hexane | Trace[3] | SW-846 8260 |
| N,N-Dimethylformamide | Trace[3] | (4) |
| Triethylamine | Trace[3] | (4) |

1. Based on waste analysis data and process knowledge.
2. TAPI assumes the analyte is present at the full detection limit, if not detected.
3. Pollutants reported at trace levels are present at concentrations less than 200 ppm.
4. Based on process knowledge.

**Table 4-1. Comparison of Trane 1 and Trane 2 Incinerators**

| Criteria | Trane 1 | Trane 2 | Allowable Variation[1] |
|---|---|---|---|
| Type | Liquid | Liquid | Same |
| Main Burner | Trane LV10 | Trane LV10 | Same |
| Atomizing Nozzle | NAO-226-3 w/14 #40 holes | NAO-226-3 w/14 #40 holes | Same |
| Waste Injection Nozzle | Caloric UN 630 | Caloric UN 630 | Same |
| Combustion Chamber: | | | |
| Diameter | 3 ft 9.75 in | 3 ft 9.75 in | ±10% |
| Height | 22 ft 8.4 in | 22 ft 8.4 in | ±10% |
| Venturi Scrubber: | | | |
| Pressure drop (in. w.c.) | 50 | 50 | - |
| Liquid-to-gas ratio | 0.176 | 0.176 | ±20% |
| Separator: | | | |
| Diameter | 5 ft | 5 ft | ±10% |
| Height | 18 ft | 18 ft | ±10% |
| Mist eliminator | 2 ft | 2 ft | ±10% |
| Auxiliary fuel | Kerosene/propane | Kerosene/propane | Same |
| Ratio | 0 | 0 | ±5% |

1. Allowable variations based on USEPA, 1983, Section 3.1.2.

**Table 4-2. Maximum Theoretical Emission Concentration for Mercury**

| Metal | Maximum Waste Feed Concentration (ug/L) [1] | Total Waste Feed Flow Rate [2] (liters/min) | Maximum Feed Rate [3] | | Maximum Emission Rate (ug/min) | Total Minimum Stack Gas Flow Rate (dscf/min) [4] | Maximum Theoretical Emission Concentration (ug/dscm) [5] | HWC MACT Emission Standard (ug/dscm) |
|---|---|---|---|---|---|---|---|---|
| | | | (ug/min) | (lb/hr) | | | | |
| **Mode 1 – One Incinerator Operating** | | | | | | | | |
| Mercury | 246 | 17 | 4,182 | 5.5E-04 | 4,182 | 1,150 | 128 | 130 |
| **Mode 2 – Two Incinerators Operating [6]** | | | | | | | | |
| Mercury | 246 | 34 | 8,364 | 1.1E-03 | 8,364 | 2,300 | 128 | 130 |

1. Based on flow weighted maximum concentrations from waste characterization data in Table 2-1 and 2-2, and maximum anticipated waste feed rates.
2. Based on combined maximum anticipated feed rate limits (12.5 lpm Aqueous + 4.5 lpm Organic) for each incinerator.
3. Maximum Feed Rate = Maximum Waste Feed Concentration (ug/liter) x Maximum Total Waste Feed Flow Rate (liters/min).
4. Calculated minimum stack gas flow rate needed to meet HWC MACT emission standard at maximum metal feed rate, assuming no control of the metal species.
5. Maximum Theoretical Emission Concentration (ug/dscm) =

   [Emission Rate (ug/min)] / {[Minimum Stack Gas Flow Rate (dscf/min)] x 0.028316}

   Note: 0.028316 is the conversion factor from dscf to dscm.
6. Mode 2 feed rate and stack gas flow rate is double Mode 1 waste feed rate and stack gas flow rate

**Table 5-1. Trane 1 Incinerator Key Process Control Monitors**

| Instrument ID | Monitor Description |
|---|---|
| FT/FE-908-1 | Organic waste flow rate |
| FT/FE-923-1 | Aqueous waste flow rate |
| PT-975B-1 | Aqueous waste atomization pressure |
| PT-975A-1 | Organic waste atomization pressure |
| FT-904-1 | Kerosene flow rate |
| TIC-905-1 | Incinerator combustion chamber temperature |
| FT-907-1 | Combustion air flow rate |
| FT-906-1 | Secondary air flow rate |
| FT-975C-1 | Organic waste atomization air flow rate |
| FT-975D-1 | Aqueous waste atomization air flow rate |
| AE-900-1 | CO and $O_2$ analyzer CEMS [(a)] |
| AE-901-1 | Quench tank blowdown pH |
| FT-903-1 | Quench tank blowdown flow rate |
| LT-910-1 | Quench tank level |
| PDT-945-1 | Venturi scrubber pressure differential |
| FT-901A-1 | Venturi scrubber recycle water flow rate |
| AE-902-1 | Venturi scrubber recycle water pH |
| FT-944-1 | Venturi scrubber blowdown flow rate |
| LT-907-1 | Separator tank level |
| SQ-300V/300A | WESP secondary power input |

(a) Single exhaust stack common to both Trane 1 and Trane 2.

**Table 5-2. Trane 2 Incinerator Key Process Control Monitors**

| Instrument ID | Monitor Description |
|---|---|
| FT/FE-908-2 | Organic waste flow rate |
| FT/FE-923-2 | Aqueous waste flow rate |
| PT-975B-2 | Aqueous waste atomization pressure |
| PT-975A-2 | Organic waste atomization pressure |
| FT-904-2 | Kerosene flow rate |
| TIC-905-2 | Incinerator combustion chamber temperature |
| FT-907-2 | Combustion air flow rate |
| FT-906-2 | Secondary air flow rate |
| FT-975C-2 | Organic waste atomization air flow rate |
| FT-975D-2 | Aqueous waste atomization air flow rate |
| AE-900-1 | CO and $O_2$ analyzer CEMS [(a)] |
| AE-901-2 | Quench tank blowdown pH |
| FT-903-2 | Quench tank blowdown flow rate |
| LT-910-2 | Quench tank level |
| PDT-945-2 | Venturi scrubber pressure differential |
| FT-901A-2 | Venturi scrubber recycle water flow rate |
| AE-902-2 | Venturi scrubber recycle water pH |
| FT-944-2 | Venturi scrubber blowdown flow rate |
| LT-907-2 | Separator tank level |
| SQ-300V/300A | WESP secondary power input |

(a) Single exhaust stack common to both Trane 1 and Trane 2.

**Table 5-3. Trane 1 Incinerator Automatic Waste Feed Cutoff Interlocks**

| Instrument ID | Interlock |
|---|---|
| FT/FE-908-1 | Organic waste flow rate |
| FT/FE-923-1 | Aqueous waste flow rate |
| PT-975B-1 | Aqueous waste atomization pressure |
| PT-975A-1 | Organic waste atomization pressure |
| TIC-905-1 | Incinerator combustion chamber temperature |
| FT-907-1, FT-906-1, FT-975C-1, FT-975D-1 | Total combustion air flow rate |
| AE-900-1 | CO CEMS [(a)] |
| AE-901-1 | Quench tank blowdown pH |
| FT-903-1 | Quench tank blowdown flow rate |
| LT-910-1 | Quench tank level |
| PDT-945-1 | Venturi scrubber pressure differential |
| FT-901A-1 | Venturi scrubber recycle water flow rate |
| AE-902-1 | Venturi scrubber recycle water pH |
| FT-944-1 | Venturi scrubber blowdown flow rate |
| LT-907-1 | Separator tank level |
| SQ-300V/300A | WESP secondary power input |

(a) Single exhaust stack common to both Trane 1 and Trane 2.

**Table 5-4. Trane 2 Incinerator Automatic Waste Feed Cutoff Interlocks**

| Instrument ID | Interlock |
|---|---|
| FT/FE-908-2 | Organic waste flow rate |
| FT/FE-923-2 | Aqueous waste flow rate |
| PT-975B-2 | Aqueous waste atomization pressure |
| PT-975A-2 | Organic waste atomization pressure |
| TIC-905-2 | Incinerator combustion chamber temperature |
| FT-907-2, FT-906-2, FT-975C-2, FT-975D-2 | Total combustion air flow rate |
| AE-900-1 | CO CEMS [(a)] |
| AE-901-2 | Quench tank blowdown pH |
| FT-903-2 | Quench tank blowdown flow rate |
| LT-910-2 | Quench tank level |
| PDT-945-2 | Venturi scrubber pressure differential |
| FT-901A-2 | Venturi scrubber recycle water flow rate |
| AE-902-2 | Venturi scrubber recycle water pH |
| FT-944-2 | Venturi scrubber blowdown flow rate |
| LT-907-2 | Separator tank level |
| SQ-300V/300A | WESP secondary power input |

(a) Single exhaust stack common to both Trane 1 and Trane 2.

**Table 5-5. Trane 1 Incinerator Automatic Waste Feed Cutoff Test**

| Instrument ID | Interlock Condition | Operating Limit | Interlock Setpoint [(a)] | Averaging Time [(b)] |
|---|---|---|---|---|
| FT/FE-908-1 | Maximum organic waste flow rate (lpm) | 4.7 | 4.5 | 1 hour |
| FT/FE-923-1 | Maximum aqueous waste flow rate (lpm) | 12.8 | 12.5 | 1 hour |
| PT-975B-1 | Minimum aqueous waste atomization pressure (psi) | 19.1 | 20.0 | 1 hour |
| PT-975A-1 | Minimum organic waste atomization pressure (psi) | 20.8 | 22.0 | 1 hour |
| TIC-905-1 | Minimum incinerator combustion chamber temperature (°C) | 1,014 | 1,020 | 1 hour |
| FT-907-1, FT-906-1, FT-975C-1, FT-975D-1 | Maximum total combustion air flow rate [(c)] (scfm) | 1,627 | 1,590 | 1 hour |
| FT-907-1, FT-906-1, FT-975C-1, FT-975D-1 | Minimum total combustion air flow rate [(c)] (scfm) | 1,150 | 1,070 | 1 hour |
| AE-900-1 | Maximum stack gas CO (ppmv, corrected to 7% $O_2$, dry basis) | 100 | 100 | 1 hour |
| AE-901-1 | Minimum quench tank blowdown pH | 7.4 | 7.5 | 1 hour |
| FT-903-1 | Minimum quench tank blowdown flow rate (lpm) | 26.7 | 30 | 1 hour |
| LT-910-1 | Minimum quench tank level (in. $H_2O$) | 38.7 | 42 | 1 hour |
| PDT-945-1 | Minimum venturi scrubber pressure differential (in. $H_2O$) | 61.9 | 63 | 1 hour |
| FT-901A-1 | Minimum venturi scrubber recycle water flow rate (lpm) | 263 | 268 | 1 hour |
| AE-902-1 | Minimum venturi scrubber recycle water pH | 6.7 | 6.8 | 1 hour |
| FT-944-1 | Minimum venturi scrubber blowdown flow rate (gpm) | 2.4 | 2.8 | 1 hour |
| LT-907-1 | Minimum separator tank level (in. $H_2O$) | 40.1 | 42 | 1 hour |
| SQ-300V/300A | Minimum WESP secondary power input (kW) | 5.6 | 5.8 | 1 hour |
| Calculated [(d)] | Maximum ash feed rate (lb/hr) | 226 | 220 | 12 hour |
| Calculated [(d)] | Maximum total chlorine/chloride feed rate (lb/hr) | 241 | 235 | 12 hour |
| Calculated [(d)] | Maximum SVM (Cd + Pb) feed rate (lb/hr) | 3.97E-03 | 3.56E-03 | 12 hour |
| Calculated [(d)] | Maximum LVM (As + Be + Cr) feed rate (lb/hr) | 5.21E-03 | 4.68E-03 | 12 hour |
| Calculated [(d)] | Maximum mercury feed rate (lb/hr) | 3.56E-04 | 3.0E-04 | 12 hour |

(a) These setpoints apply to the automatic waste feed cutoff test.

(b) Rolling average

(c) Combustion air, secondary air, and atomization air.

(d) Calculated based on concentration and flow rate for waste feed streams and kerosene feed stream.

**Table 5-6. Trane 2 Incinerator Automatic Waste Feed Cutoff Test**

| Instrument ID | Interlock Condition | Operating Limit | Interlock Setpoint [(a)] | Averaging Time [(b)] |
|---|---|---|---|---|
| FT/FE-908-2 | Maximum organic waste flow rate (lpm) | 4.7 | 4.5 | 1 hour |
| FT/FE-923-2 | Maximum aqueous waste flow rate (lpm) | 12.8 | 12.5 | 1 hour |
| PT-975B-2 | Minimum aqueous waste atomization pressure (psi) | 19.1 | 20.0 | 1 hour |
| PT-975A-2 | Minimum organic waste atomization pressure (psi) | 20.8 | 22.0 | 1 hour |
| TIC-905-2 | Minimum incinerator combustion chamber temperature (°C) | 1,014 | 1,020 | 1 hour |
| FT-907-2, FT-906-2, FT-975C-2, FT-975D-2 | Maximum total combustion air flow rate [(c)] (scfm) | 1,627 | 1,590 | 1 hour |
| FT-907-2, FT-906-2, FT-975C-2, FT-975D-2 | Minimum total combustion air flow rate [(c)] (scfm) | 1,150 | 1,070 | 1 hour |
| AE-900-1 | Maximum stack gas CO (ppmv, corrected to 7% $O_2$, dry basis) | 100 | 100 | 1 hour |
| AE-901-2 | Minimum quench tank blowdown pH | 7.4 | 7.5 | 1 hour |
| FT-903-2 | Minimum quench tank blowdown flow rate (lpm) | 26.7 | 30 | 1 hour |
| LT-910-2 | Minimum quench tank level (in. $H_2O$) | 38.7 | 42 | 1 hour |
| PDT-945-2 | Minimum venturi scrubber pressure differential (in. $H_2O$) | 61.9 | 63 | 1 hour |
| FT-901A-2 | Minimum venturi scrubber recycle water flow rate (lpm) | 263 | 268 | 1 hour |
| AE-902-2 | Minimum venturi scrubber recycle water pH | 6.7 | 6.8 | 1 hour |
| FT-944-2 | Minimum venturi scrubber blowdown flow rate (gpm) | 2.4 | 2.8 | 1 hour |
| LT-907-2 | Minimum separator tank level (in. $H_2O$) | 40.1 | 42 | 1 hour |
| SQ-300V/300A | Minimum WESP secondary power input (kW) | 5.6 | 5.8 | 1 hour |
| Calculated [(d)] | Maximum ash feed rate (lb/hr) | 226 | 220 | 12 hour |
| Calculated [(d)] | Maximum total chlorine/chloride feed rate (lb/hr) | 241 | 235 | 12 hour |
| Calculated [(d)] | Maximum SVM (Cd + Pb) feed rate (lb/hr) | 3.97E-03 | 3.56E-03 | 12 hour |
| Calculated [(d)] | Maximum LVM (As + Be + Cr) feed rate (lb/hr) | 5.21E-03 | 4.68E-03 | 12 hour |
| Calculated [(d)] | Maximum mercury feed rate (lb/hr) | 3.56E-04 | 3.0E-04 | 12 hour |

(a) These setpoints apply to the automatic waste feed cutoff test.

(b) Rolling average

(c) Combustion air, secondary air, and atomization air.

(d) Calculated based on concentration and flow rate for waste feed streams and kerosene feed stream.

**Table 6-1. Summary of Incinerator Waste Feed Characteristics**

| Waste Characteristics | Value (per Incinerator) |
|---|---|
| Physical state | Liquid |
| Aqueous waste flow rate (lpm) | 12.8 |
| Organic waste flow rate (lpm) | 4.7 |
| Lead (from spiking) (lb/hr) | 0.008 |
| Chromium (from spiking) (lb/hr) | 0.01 |
| Mercury feed rate (lb/hr) [(a)] | ~2.6E-05 |
| SVM feed rate (lb/hr) [(b)] | ~0.009 |
| LVM feed rate (lb/hr) [(c)] | ~0.011 |
| Methylene chloride (lb/hr) | 75 - 125 |
| Sodium chloride (ash) spiking rate (lb/hr) | 174 |
| Total ash feed rate (lb/hr) [(d)] | 226 |
| Organic chlorine feed rate (lb/hr) [(e)] | 104 |
| Inorganic chloride feed rate (lb/hr) [(f)] | 137 |
| Total chlorine/chloride feed rate (lb/hr) | 241 |
| Viscosity (centipoises) | ≤ 3 |

(a) Based on historical average mercury concentrations. No spiking of mercury will be done.
(b) Based on lead spiking rate plus historical average SVM concentrations.
(c) Based on chromium spiking rate plus historical average LVM concentrations.
(d) Based on historical average ash concentrations plus sodium chloride spiking.
(e) Based on historical average organic chlorine concentration, plus 83.5% of the methylene chloride feed rate.
(f) Based on 60.6% of the ash feed rate, assuming all ash is sodium chloride.

**Table 6-2. Planned CPT Operating Conditions**

| Parameter | Operating Condition [(a)] |
|---|---|
| Maximum organic waste flow rate | 4.7 lpm |
| Maximum aqueous waste flow rate | 12.8 lpm |
| Minimum aqueous waste atomization pressure | ≥19.1 psi |
| Minimum organic waste atomization pressure | ≥20.8 psi |
| Minimum incinerator combustion chamber temperature | 1,014°C |
| Maximum total combustion air flow rate [(b)] | 1,627 scfm |
| Minimum total combustion air flow rate [(c)] (scfm) | 1,150 |
| Maximum stack gas CO (corrected to 7% $O_2$, dry basis) | 100 ppmv |
| Minimum quench tank blowdown pH | 7.4 |
| Minimum quench tank blowdown flow rate | 26.7 lpm |
| Minimum quench tank level | 38.7 in. $H_2O$ |
| Minimum venturi scrubber pressure differential | 61.9 in. $H_2O$ |
| Minimum venturi scrubber recycle water flow rate | 263 lpm |
| Minimum venturi scrubber recycle water pH | 6.7 |
| Minimum venturi scrubber blowdown flow rate | 2.4 gpm |
| Minimum separator tank level | 40.1 in. $H_2O$ |
| Minimum WESP secondary power input | 5.6 kW |
| Maximum ash feed rate | 226 lb/hr |
| Maximum total chlorine/chloride feed rate | 241 lb/hr |
| Maximum SVM (Cd + Pb) feed rate | ~0.008 lb/hr |
| Maximum LVM (As + Be + Cr) feed rate | ~0.02 lb/hr |
| Maximum mercury MTEC | <130 ug/dscm |

(a) These targets apply to the planned CPT operation for each incinerator. In order to attain these conditions the automatic waste feed cutoff interlocks will be expanded by approximately 10% during the CPT.

(b) Combustion air, secondary air, and atomization air.

(c) Combustion air, secondary air, and atomization air.

**Table 6-3. Comprehensive Performance Test Schedule**

| Activity | | Duration [(a)] |
|---|---|---|
| **Pre-Test Activities** | | |
| | Accumulate waste feed materials with approximately average ash, chloride, and metals content | |
| | Obtain samples of accumulated wastes and analyze | |
| | Conduct pre-test calibration of process instruments and sampling equipment | |
| | Test team and equipment arrives; set up field lab | 30 days |
| | Complete equipment setup; establish test site | |
| | Conduct preliminary testing, as required | |
| | Conduct performance evaluation of CMS and CEMS | |
| | Conduct automatic waste feed cutoff testing | |
| **Comprehensive Performance Test** | | |
| | Pretest briefing | |
| | Preparation of stack sampling trains | |
| | Deliver sampling trains to stack | |
| | Begin feed and allow incinerators to stabilize | 4 days |
| | Initiate sampling | |
| | Complete sampling | |
| | Commence cleanup operations and equipment storage | |
| | Conduct post-test briefing | |
| | Submit samples for analysis; secure site | |
| **Post-test Activities** | | |
| | Dissemble test site and pack equipment | |
| | Complete post-test calibrations of sampling equipment | |
| | Complete sample analysis | 90 days |
| | Conduct calculations and prepare CPT Report | |
| | Develop operating conditions | |
| | Submit Notification of Compliance | |

(a) These targets apply to the planned CPT operation for each incinerator. In order to attain these conditions the automatic waste feed cutoff interlocks will be expanded by approximately 10% during the CPT.

**Table 6-4. Typical Test Run Sequence**

| Hour | Activity |
|---|---|
| 00:00 | System is operating on waste feed and ash, chlorine, and metals spiking materials at the target operating conditions.<br>Testing crew begins setting up for testing. |
| 02:00 | Testing crew has all sampling trains in place and ready to begin testing. |
| 03:00 | Preliminary velocity traverses have been conducted and nozzle sizes selected.<br>Testing crew has completed test preparations and leak checks.<br>Ready to start first traverse with Method 26A and Method 29 sampling trains. |
| 03:00 | Start first sampling traverse of Method 26A and Method 29 sampling trains. |
| 04:00 | Complete first traverse of Method 26A and Method 29 sampling trains. |
| 04:00 to 04:15 | Conduct post-traverse leak checks of Method 26A and Method 29 sampling trains.<br>Switch sampling port locations of Method 26A and Method 29 sampling trains.<br>Conduct post-port change leak checks of Method 26A and Method 29 sampling trains (optional). |
| 04:15 | Start second traverse of Method 26A and Method 29 sampling trains. |
| 05:15 | Complete second traverse of Method 26A and Method 29 sampling trains. |
| 05:15 to 05:30 | Conduct post-traverse leak check of Method 26A and Method 29 sampling trains.<br>Remove Method 26A and Method 29 trains from stack.<br>Stop metals spiking.<br>Move Method 23 train to stack and conduct pre-test leak-check. |
| 05:30 | Begin first traverse of Method 23 sampling train. |
| 07:00 | Complete first traverse of Method 23 sampling train. |
| 07:00 to 07:15 | Conduct post-traverse leak checks of Method 23 sampling train.<br>Switch sampling port locations of Method 23 sampling train.<br>Conduct post-port change leak checks of Method 23 sampling train. |
| 07:15 | Start second sampling traverse for Method 23 sampling train. |
| 08:45 | Complete second traverse of Method 23 sampling train.<br>Stop ash and chlorine spiking. |
| 08:45 to 09:00 | Conduct post-traverse leak checks of Method 23 sampling train.<br>Remove Method 23 train from stack. |
| 09:00 to 10:00 | Recover samples and prepare for next run. |
| Note: Schedule repeated each sampling run. Time for setup and preliminary velocity traverses may be shortened following the first run. Sample recovery estimated to require 2 to 3 hours. | |

**Table 7-1. Summary of Comprehensive Performance Test Sampling Program**

| Stream | Sampling Parameter | Sampling Frequency |
|---|---|---|
| Stack Gas | PCDD/PCDF [(a)] | Continuous during each run |
| | Particulate matter [(b)] | |
| | $HCl/Cl_2$ [(b)] | |
| | pH | |
| | Metals (As, Be, Cd, Cr, Pb) [(b)] | |
| | CO and $O_2$ [(c)] | |
| | Temperature [(d)] | |
| | Stack gas flow rate & moisture [(d)] | |
| Organic Waste Feed (unspiked) | Ash content | Grab sample every 15 minutes during each run; composited for each run. |
| | Higher heating value | |
| | Viscosity | |
| | Moisture | |
| | Density | |
| | pH | |
| | Metals (As, Be, Cd, Cr, Pb, Hg) | |
| | Total chlorine/chloride | |
| Aqueous Waste Feed (unspiked) | Ash content | Grab sample every 15 minutes during each run; composited for each run. |
| | Higher heating value | |
| | Viscosity | |
| | Moisture | |
| | Density | |
| | Metals (As, Be, Cd, Cr, Pb, Hg) | |
| | Total chlorine/chloride | |
| Venturi Scrubber Blowdown | Total chlorine/chloride | Grab sample every 15 minutes during each run; composited for each run. |
| | Total solids | |
| | Ash content | |
| Makeup Water | Total chlorine/chloride | Two grab sample at the beginning of each run. |
| | Total solids | |
| Auxiliary Fuel | Ash content | Two grab sample prior to the test. |
| | Metals (As, Be, Cd, Cr, Pb, Hg) | |
| | Total chlorine/chloride | |

(a) Minimum sampling time of 3 hours, and minimum sample volume of 2.5 dscm, per 40 CFR 63.1208(b)(1)(ii).
(b) Minimum sampling time 2 hour.
(c) Continuously monitored using installed CEMS.
(d) Integrated into the sampling for M23, M26A and M29.

**Table 7-2. Summary of Sampling Locations, Sampling Parameters, Sampling and Analytical Methods for Comprehensive Performance Test**

| Sample Name | Sampling Location/ Access | Sampling Equipment | Sampling Reference Method [a] | Sample Size/Frequency- | Analytical Parameters | Analytical Reference Method [a] |
|---|---|---|---|---|---|---|
| Organic Waste Feed | 1/Tap on line | 250 mL grab sample bottle;<br>4 L glass bottle; 250 mL glass sample bottles; | ASTM E-300-86<br>EPA S004 | Collect one 250 mL grab sample at each 15-minute interval during each test run. Grab samples will be combined in 4 L bottle to build run composite. Collect four 250 mL samples from the final composite. | Heating Value<br>Viscosity<br>Density<br>Ash Content<br>pH<br>Total Chloride<br><br>Moisture<br><br>Metals: As, Be, Cd, total Cr, & Pb<br><br>Hg | ASTM D-240<br>ASTM D-445<br>ASTM D-1963<br>ASTM D-482<br>EPA 9045D<br>SW846 9056A<br><br>ASTM D-4928 (Karl Fisher)<br><br>SW846 6010C<br><br>SW846 7470A/EPA 245.1 or SW846 7471B/EPA 245.5 CVAA |
| Aqueous Waste Feed | 2/Tap on line | 250 mL grab sample bottle;<br>4 L glass bottle; 250 mL glass sample bottles | ASTM E-300-86<br>EPA S004 | Collect one 250 mL grab sample at each 15-minute interval during each test run. Grab samples will be combined in 4 L bottle to build run composite. Collect four 250 mL samples from the final composite. | Heating Value<br>Viscosity<br>Density<br>Ash Content<br>pH<br>Total Chloride<br><br>Moisture<br><br>Metals: As, Be, Cd, total Cr, & Pb<br><br>Hg | ASTM D-240<br>ASTM D-445<br>ASTM D-1963<br>ASTM D-482<br>EPA 9040C<br>SW846 9056A<br><br>ASTM D-4928 (Karl Fisher)<br><br>SW846 6010C ICP<br><br>SW846 7470A/EPA 245.1 or SW846 7471B/EPA 245.5 CVAA |

**Table 7-2. Summary of Sampling Locations, Sampling Parameters, Sampling and Analytical Methods for Comprehensive Performance Test (Cont)**

| Sample Name | Sampling Location/ Access | Sampling Equipment | Sampling Reference Method [a] | Sample Size/Frequency- | Analytical Parameters | Analytical Reference Method [a] |
|---|---|---|---|---|---|---|
| Venturi Scrubber Blowdown | 4/Tap on line | 250 mL grab sample bottle; 4 L glass bottle; 250 mL glass sample bottle | ASTM E-300-86 EPA S004 | Collect a 250 mL grab sample at each 15-minute interval during each test run. Grab samples will be combined in 4 L bottle to build run composite. Collect two 250 mL samples. | Total Solids<br><br>Ash Content<br>Total Chloride | EPA 160.3<br><br>ASTM D-482<br>SW846 9056A |
| Makeup Water | 5/Tap on line | 250 mL glass sample bottles | ASTM E-300-86 EPA S004 | Collect two 250 mL sample bottles once during each test run | Total Solids<br><br>Total Chloride | EPA 160.3<br><br>SW846 9056A |
| Auxiliary Fuel | 6/Tap on line | 250 mL glass sample bottles | ASTM E-300-86 EPA S004 | Collect two 250 mL glass sample bottle once during test | Ash Content<br>Total Chlorides<br><br>Metals: As, Be, Cd, total Cr, & Pb<br><br>Hg | ASTM D-482<br>SW846 9056A<br><br>SW846 6010C ICP<br><br>SW846 7470A/EPA 245.1 or SW846 7471B/EPA 245.5 CVAA |
| Sodium Chloride Spiking Solution | 7/Tap on line | 250 mL sample bottle | ASTM E-300-86 EPA S004 | Collect one 250 mL sample bottles of the material once during each test run | Total Chloride (used for confirmation) | ArchiveSW846 9056A. |
| Methylene Chloride Spiking Solution | 8/Tap on line | 250 mL sample bottle | ASTM E-300-86 EPA S004 | Collect one 250 mL sample bottles of the material once during each test run | Total Chloride (used for confirmation) | SW846 9056A |
| Lead Spiking Solution | 9/Tap on line | 250 mL sample bottle | ASTM E-300-86 EPA S004 | Collect one 250 mL sample bottles of the material once during each test run | Lead (used for confirmation) | SW846 6010C |

**Table 7-2. Summary of Sampling Locations, Sampling Parameters, Sampling and Analytical Methods for Comprehensive Performance Test (Cont)**

| Sample Name | Sampling Location/ Access | Sampling Equipment | Sampling Reference Method [a] | Sample Size/Frequency- | Analytical Parameters | Analytical Reference Method [a] |
|---|---|---|---|---|---|---|
| Chromium Spiking Solution | 10/Tap on line | 250 mL sample bottle | ASTM E-300-86 EPA S004 | Collect one 250 mL sample bottles of the material once during each test run | Chromium (used for confirmation) | SW846 6010C |
| Stack Gas | 11/Stack Isokinetic ports | Method 23 Sampling Train | EPA Method 23 | Minimum of 180 minutes and 2.5 dry standard cubic meters[c,d] | PCDD/PDCFs | SW846 Method 8290A |
| Stack Gas | 11/Stack Isokinetic ports | Method 29 Sampling Train | EPA Method 29 | 120 minutes [c,d] | Metals: As, Be, Cd, total Cr, & Pb | Method 29; SW846 Method 6010C |
| Stack Gas | 11/Stack Isokinetic ports | Method 5/26A | EPA Method 5/26A | 2 hours [c,d] | Particulate $HCl/Cl_2$ | EPA Method 5/26A SW846 Method 9057 |
| Stack Gas | 12/CEMS port | Installed CO & $O_2$ CEMS | 40 CFR 60, Appendix B Specification 4B | Continuous | CO & $O_2$ | 40 CFR 60, Appendix B, Specification 4B |

Notes:
[a] Refer to Figure 7-1 of the CPTP

[b] Reference Method Sources:
"ASTM" refers to American Society for Testing Materials, Annual Book of ASTM Standards, Annual Series
"SW846" refers to Test Methods for Evaluating Solid Waste, Third Edition, November 1986, and Updates.
"EPA Method" refers to New Source Performance Standards, Test Methods and Procedures, Appendix A, 40 CFR 60.

[c] The exact volume of gas sampled will depend on the isokinetic sampling rate.

[d] Sampling train operation includes measuring stack gas: velocity, pressure and temperature (EPA Method 2); moisture (EPA Method 4); and oxygen and carbon dioxide concentration (EPA Method 3).

**FIGURES**

FILE No.: Loco. ncinerators

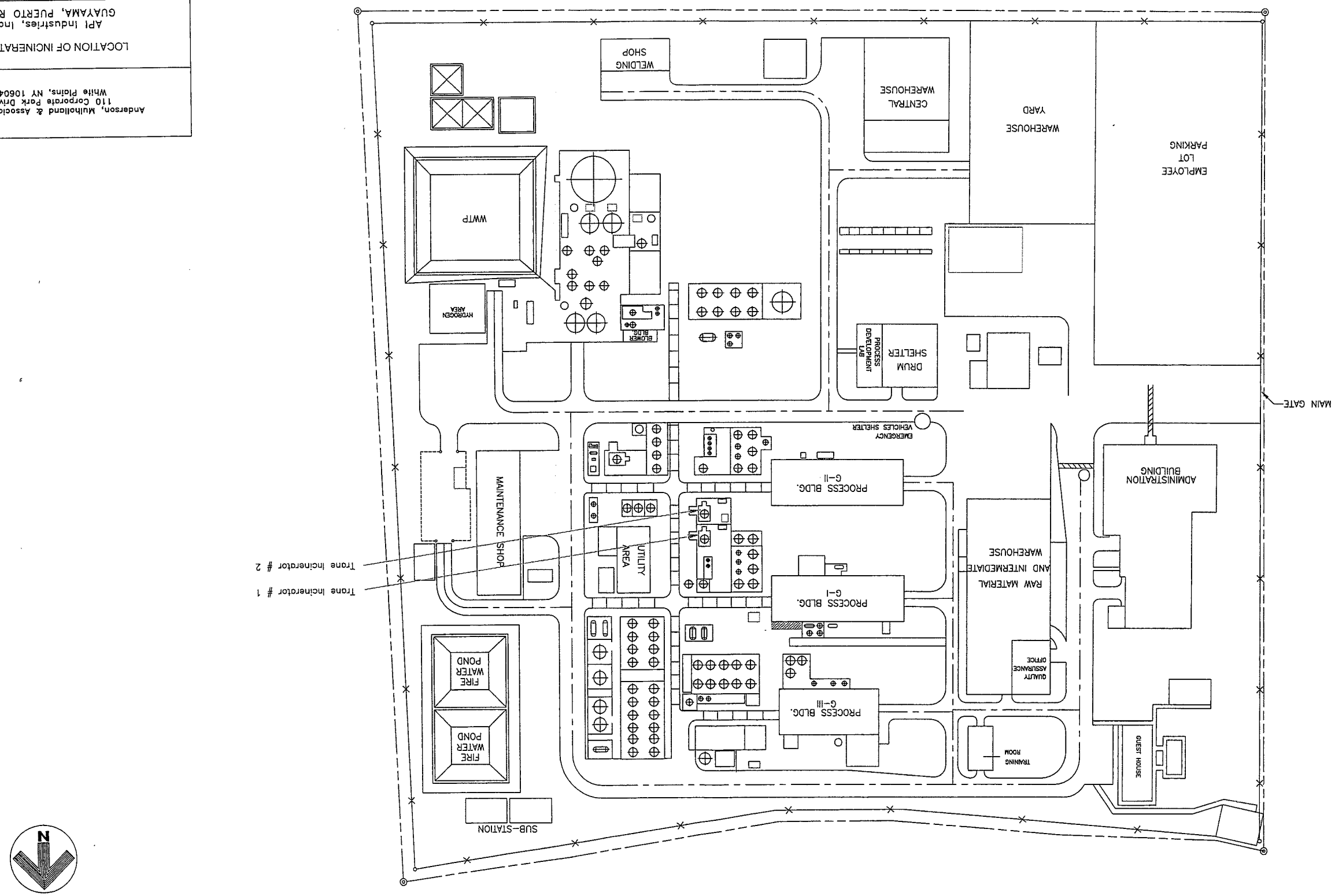


Anderson, Mulholland & Associates, Inc.
110 Corporate Park Drive
White Plains, NY 10604

LOCATION OF INCINERATORS

API Industries, Inc.
GUAYAMA, PUERTO RICO

Date: Dec 2004 | Drawn: AMAI

Scale (feet)

40 20 0 40

Figure 3-1

Rev: 0.0

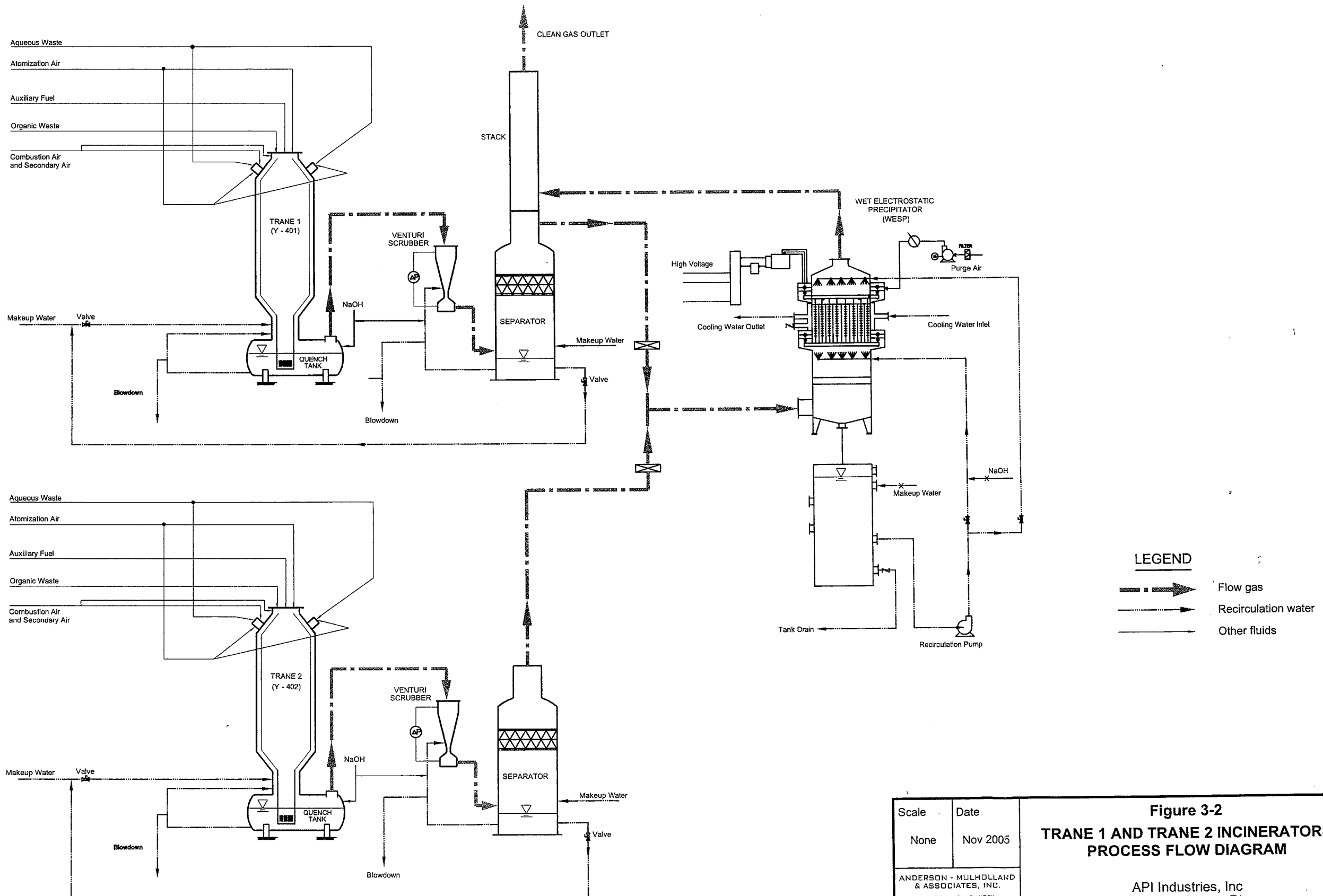


| Scale | Date |
|---|---|
| None | Nov 2005 |

ANDERSON - MULHOLLAND & ASSOCIATES, INC.
WHITE PLAINS, NEW YORK
SAN JUAN, PUERTO RICO

**Figure 3-2**

**TRANE 1 AND TRANE 2 INCINERATORS PROCESS FLOW DIAGRAM**

API Industries, Inc
Guayama, Puerto Rico

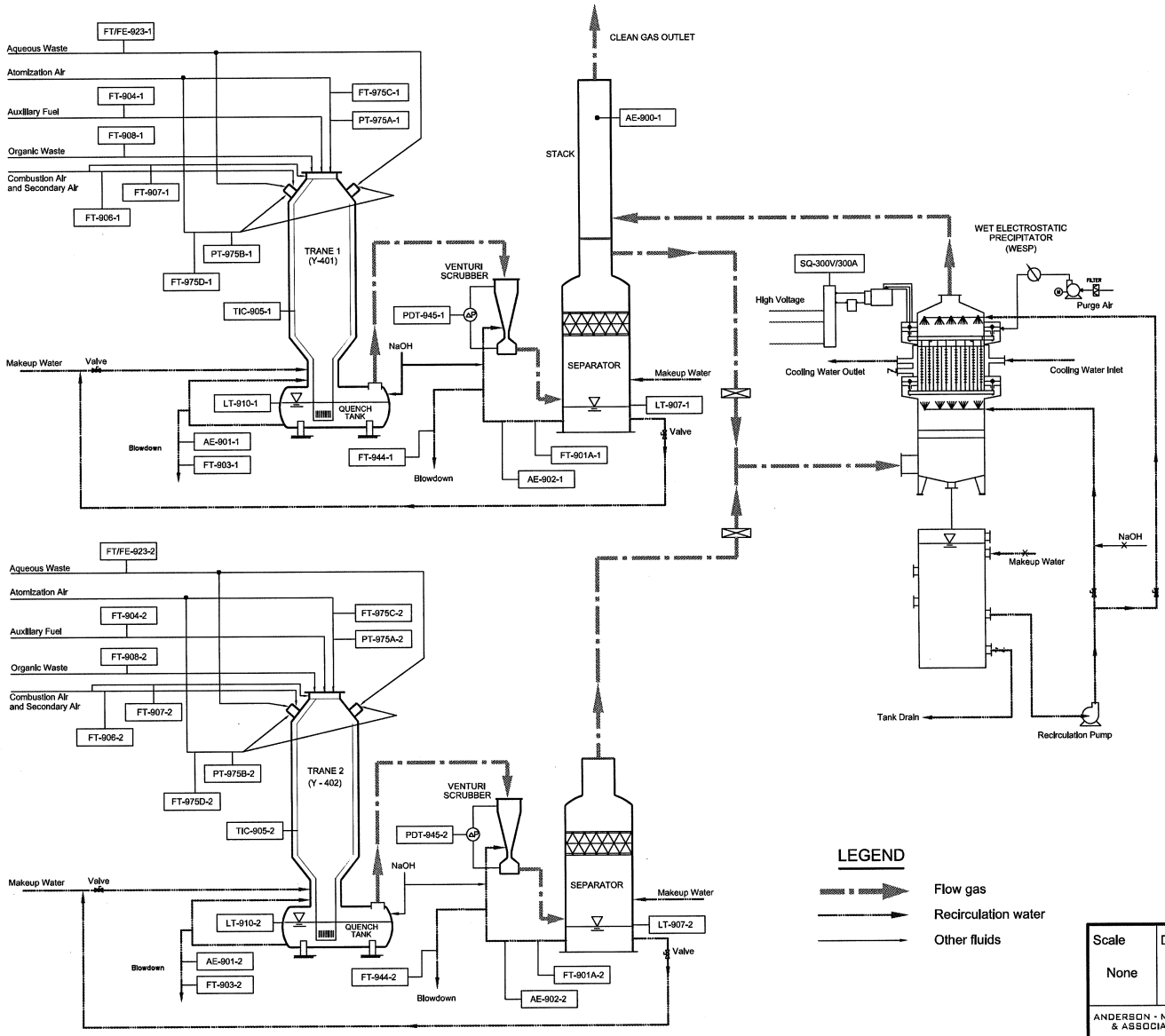


| Trane 1 Key Monitors | |
|---|---|
| TAG | Description |
| FT/FE-908-1 | Hazardous Organic Waste Flow |
| FT/FE-923-1 | Hazardous Aqueous Waste Flow |
| FT-904-1 | Kerosene Flow |
| FT-907-1 | Combustion Air Flow |
| FT-906-1 | Secondary Air Flow |
| FT-975C-1 | Organic Waste Atomization Air Flow |
| FT-975D-1 | Aqueous Waste Atomization Air Flow |
| PT-975A-1 | Organic Waste Atomization Pressure |
| PT-975B-1 | Aqueous Waste Atomization Pressure |
| TIC-905-1 | Incinerator Combustion Chamber Temperature |
| AE-901-1 | Quench Tank Blowdown PH |
| LT-910-1 | Quench Tank Water Level |
| FT-903-1 | Quench Tank Blowdown Flow |
| PDT-945-1 | Venturi Scrubber Pressure Drop |
| FT-901A-1 | Venturi Scrubber Recycle Water Flow |
| AE-902-1 | Venturi Scrubber Recycle Water PH |
| FT-944-1 | Venturi Scrubber Blowdown Flow Rate |
| LT-907-1 | Separator tank water level |
| SQ-300V/300A | WESP Secondary Power Input |
| AE-900-1 | CO & O2 Analizer (CEMS) |

| Trane 2 Key Monitors | |
|---|---|
| TAG | Description |
| FT/FE-908-2 | Hazardous Organic Waste Flow |
| FT/FE-923-2 | Hazardous Aqueous Waste Flow |
| FT-904-2 | Kerosene Flow |
| FT-907-2 | Combustion Air Flow |
| FT-906-2 | Secondary Air Flow |
| FT-975C-2 | Organic Waste Atomization Air Flow |
| FT-975D-2 | Aqueous Waste Atomization Air Flow |
| PT-975A-2 | Organic Waste Atomization Pressure |
| PT-975B-2 | Aqueous Waste Atomization Pressure |
| TIC-905-2 | Incinerator Combustion Chamber Temperature |
| AE-901-2 | Quench Tank Blowdown PH |
| LT-910-2 | Quench Tank Water Level |
| FT-903-2 | Quench Tank Blowdown Flow |
| PDT-945-2 | Venturi Scrubber Pressure Drop |
| FT-901A-2 | Venturi Scrubber Recycle Water Flow |
| AE-902-2 | Venturi Scrubber Recycle Water PH |
| FT-944-2 | Venturi Scrubber Blowdown Flow Rate |
| LT-907-2 | Separator tank water level |
| SQ-300V/300A | WESP Secondary Power Input |
| AE-900-1 | CO & O2 Analizer (CEMS) |

| Scale | Date |
|---|---|
| None | Oct 2008 |

ANDERSON - MULHOLLAND & ASSOCIATES, INC.
WHITE PLAINS, NEW YORK
SAN JUAN, PUERTO RICO

**Figure 1**

**TRANE 1 AND TRANE 2 INCINERATORS PROCESS FLOW DIAGRAM**

TAPI Puerto Rico, Inc
Guayama, Puerto Rico

Figure 5-1. Trane 1 and Trane 2 Incinerators Location of Key Monitors

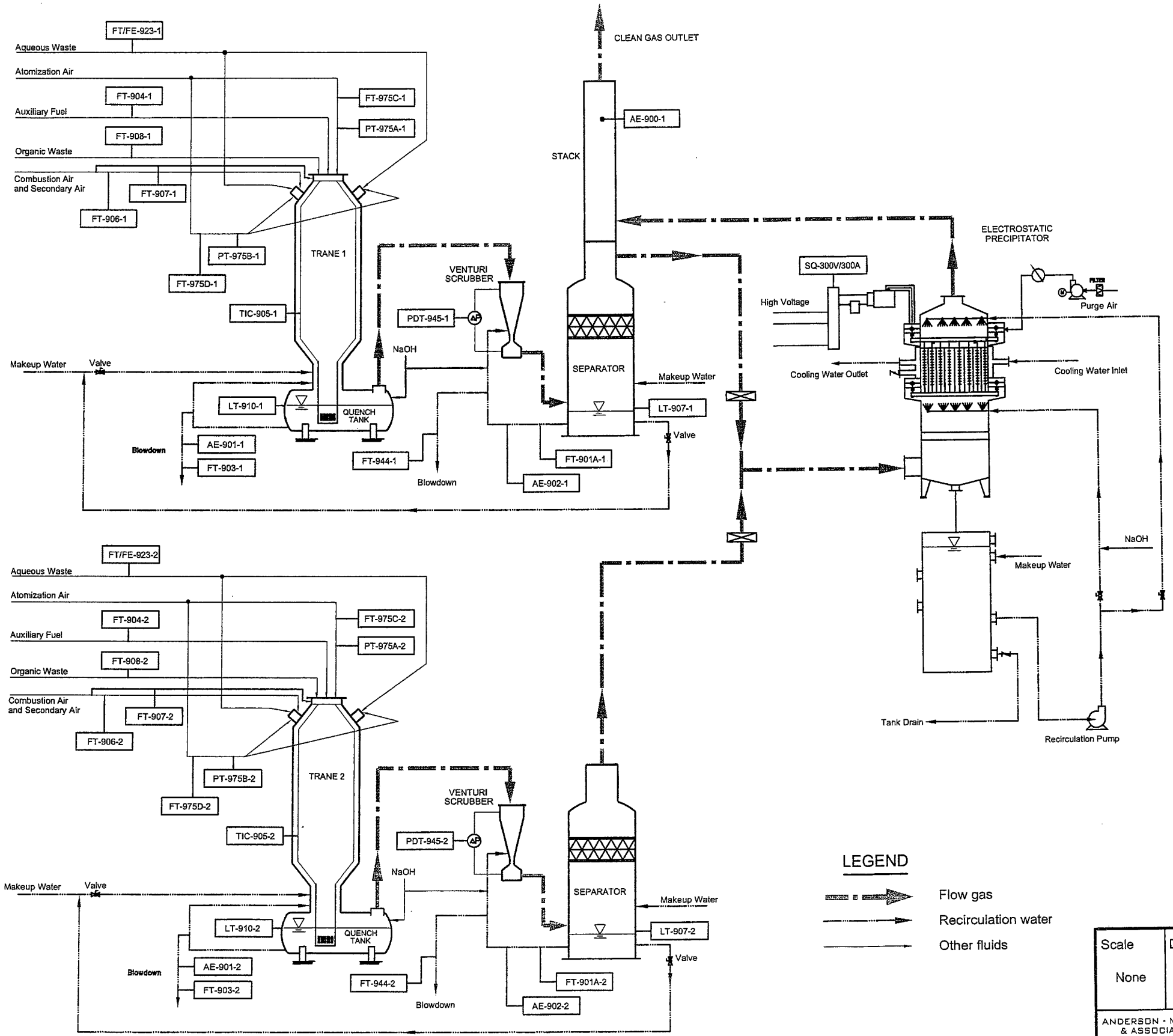


| Trane 1 Key Interlocks | |
|---|---|
| TAG | Description |
| FT/FE-908-1 | Hazardous Organic Waste Flow |
| FT/FE-923-1 | Hazardous Aqueous Waste Flow |
| FT-907-1<br>FT-906-1<br>FT-975C-1<br>FT-975D-1 | Total Combustion Air Flow |
| PT-975A-1 | Organic Waste Atomization Pressure |
| PT-975B-1 | Aqueous Waste Atomization Pressure |
| TIC-905-1 | Incinerator Combustion Chamber Temperature |
| AE-901-1 | Quench Tank Blowdown PH |
| LT-910-1 | Quench Tank Water Level |
| FT-903-1 | Quench Tank Blowdown Flow |
| PDT-945-1 | Venturi Scrubber Pressure Drop |
| FT-901A-1 | Venturi Scrubber Recycle Water Flow |
| AE-902-1 | Venturi Scrubber Recycle Water PH |
| FT-944-1 | Venturi Scrubber Blowdown Flow Rate |
| LT-907-1 | Separator tank water level |
| SQ-300V/300A | WESP Secondary Power Input |
| AE-900-1 | CO & O2 Analizer (CEMS) |

| Trane 2 Key Interlocks | |
|---|---|
| TAG | Description |
| FT/FE-908-2 | Hazardous Organic Waste Flow |
| FT/FE-923-2 | Hazardous Aqueous Waste Flow |
| FT-907-2<br>FT-906-2<br>FT-975C-2<br>FT-975D-2 | Total Combustion Air Flow |
| PT-975A-2 | Organic Waste Atomization Pressure |
| PT-975B-2 | Aqueous Waste Atomization Pressure |
| TIC-905-2 | Incinerator Combustion Chamber Temperature |
| AE-901-2 | Quench Tank Blowdown PH |
| LT-910-2 | Quench Tank Water Level |
| FT-903-2 | Quench Tank Blowdown Flow |
| PDT-945-2 | Venturi Scrubber Pressure Drop |
| FT-901A-2 | Venturi Scrubber Recycle Water Flow |
| AE-902-2 | Venturi Scrubber Recycle Water PH |
| FT-944-2 | Venturi Scrubber Blowdown Flow Rate |
| LT-907-2 | Separator tank water level |
| SQ-300V/300A | WESP Secondary Power Input |
| AE-900-1 | CO & O2 Analizer (CEMS) |

| Scale | Date |
|---|---|
| None | Nov 2005 |

ANDERSON - MULHOLLAND & ASSOCIATES, INC.
WHITE PLAINS, NEW YORK
SAN JUAN, PUERTO RICO

**Figure 5-2**

**TRANE 1 AND TRANE 2 INCINERATORS LOCATION OF KEY INTERLOCKS**

API Industries, Inc
Guayama, Puerto Rico

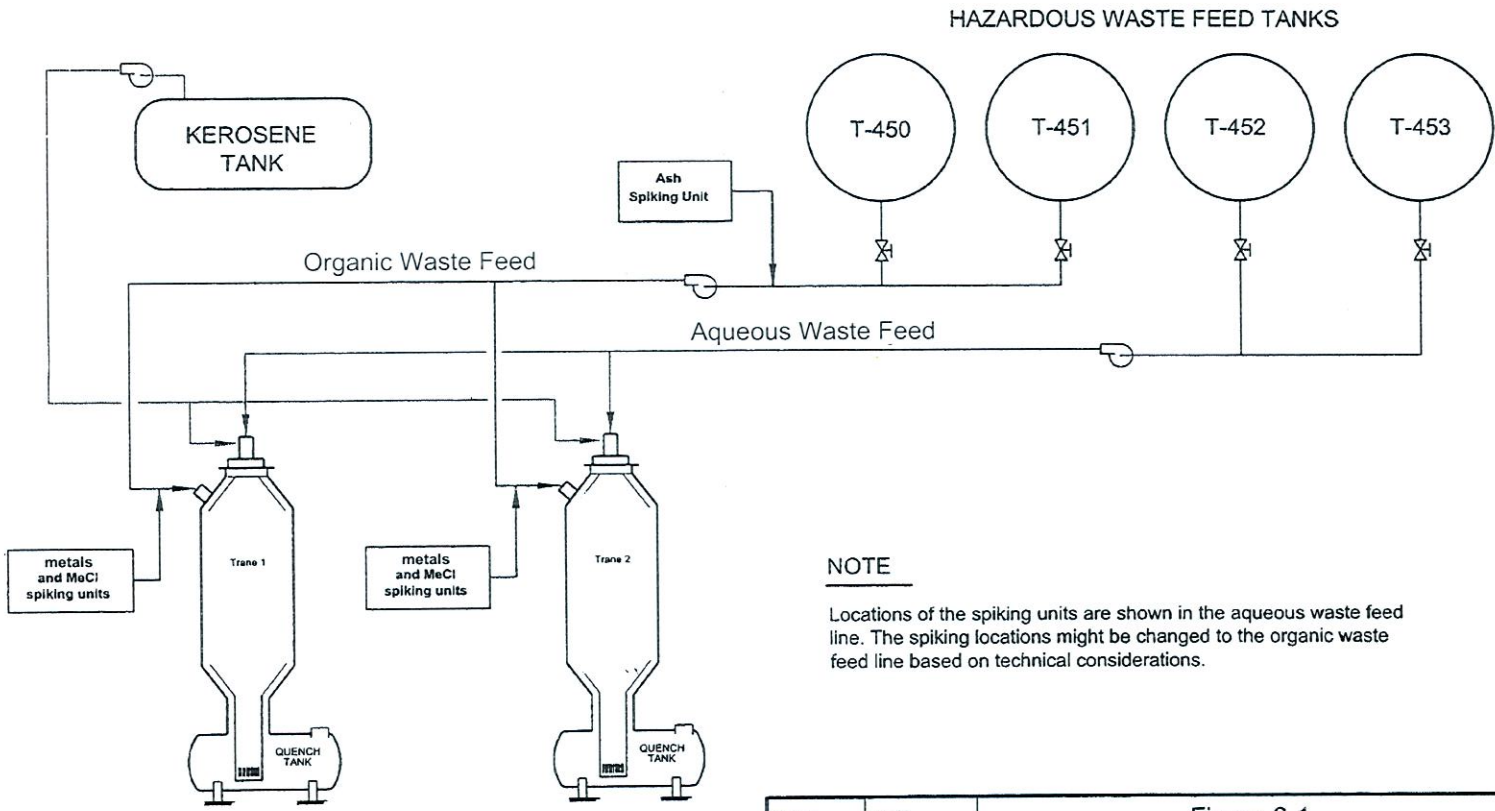


NOTE

Locations of the spiking units are shown in the aqueous waste feed line. The spiking locations might be changed to the organic waste feed line based on technical considerations.

| Scale | Date |
|---|---|
| None | Nov 2005 |

ANDERSON · MULHOLLAND & ASSOCIATES, INC.
WHITE PLAINS, NEW YORK
SAN JUAN, PUERTO RICO

Figure 6-1

**Trane 1 and Trane 2 Incinerators Conceptual Location of Spiking System**

API Industries, Inc.
Guayama, Puerto Rico

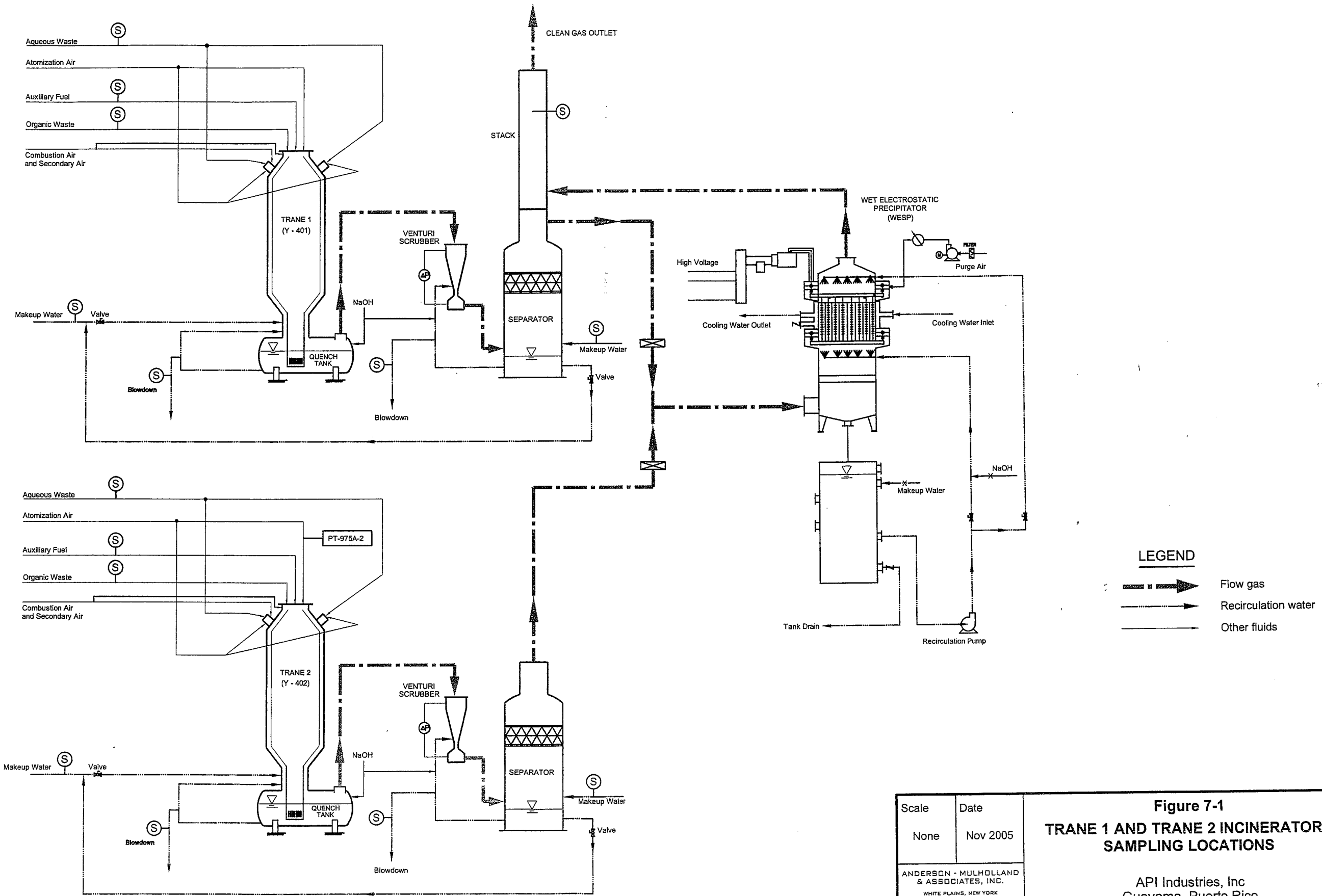


| Scale | Date |
|---|---|
| None | Nov 2005 |

ANDERSON - MULHOLLAND & ASSOCIATES, INC.
WHITE PLAINS, NEW YORK
SAN JUAN, PUERTO RICO

**Figure 7-1**

**TRANE 1 AND TRANE 2 INCINERATORS SAMPLING LOCATIONS**

API Industries, Inc
Guayama, Puerto Rico

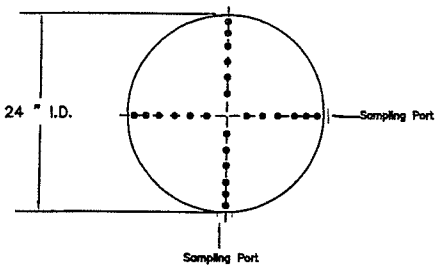


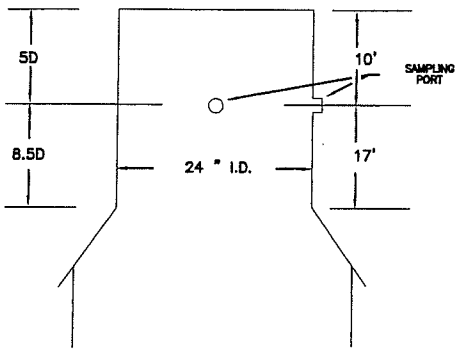


METHOD 1
TRAVERSE POINTS

API Industries, Inc
Guayama, PR

**Incinerator Stack (Common Stack for Two Trane Units)**

| | | | |
|---|---|---|---|
| Far Wall to Outside of Port | 30 | Inches | Diameters |
| Inside Wall to Outside of Port | 6 | Inches | |
| DIAMETER OF STACK | 24 | Inches | |
| Nearest Upstream Disturbance | 8.00 | Feet | 4.0 |
| Nearest Dowstream Disturbance | 40.00 | Feet | 20.0 |

NUMBER of Traverse Points per Port 12

| POINT | % of Depth | Diameter | Distance from Inside | Distance w/ Nipple |
|---|---|---|---|---|
| 1 | 0.021 | 24 | 0.504 | 6.504 |
| 2 | 0.067 | 24 | 1.608 | 7.608 |
| 3 | 0.118 | 24 | 2.832 | 8.832 |
| 4 | 0.177 | 24 | 4.248 | 10.248 |
| 5 | 0.25 | 24 | 6.000 | 12.000 |
| 6 | 0.356 | 24 | 8.544 | 14.544 |
| 7 | 0.644 | 24 | 15.456 | 21.456 |
| 8 | 0.75 | 24 | 18.000 | 24.000 |
| 9 | 0.823 | 24 | 19.752 | 25.752 |
| 10 | 0.882 | 24 | 21.168 | 27.168 |
| 11 | 0.933 | 24 | 22.392 | 28.392 |
| 12 | 0.979 | 24 | 23.496 | 29.496 |

All measurements will be verified in the field.

Two Available Ports with 12 Traverse Points per Port
Total Traverse Points = 24

**AREA OF STACK: 3.1416 ft^2**

## NOTE

This figure will be updated according to the stack test contrator evaluation during the CPT. The final configuration will be submitted with the report.

| Scale | Date | Figure 7-2 |
|---|---|---|
| None | Nov 2005 | **Stack Sampling Traverse Points** |
| ANDERSON - MULHOLLAND & ASSOCIATES, INC. WHITE PLAINS, NEW YORK SAN JUAN, PUERTO RICO | | API Industries, Inc. Guayama, Puerto Rico |