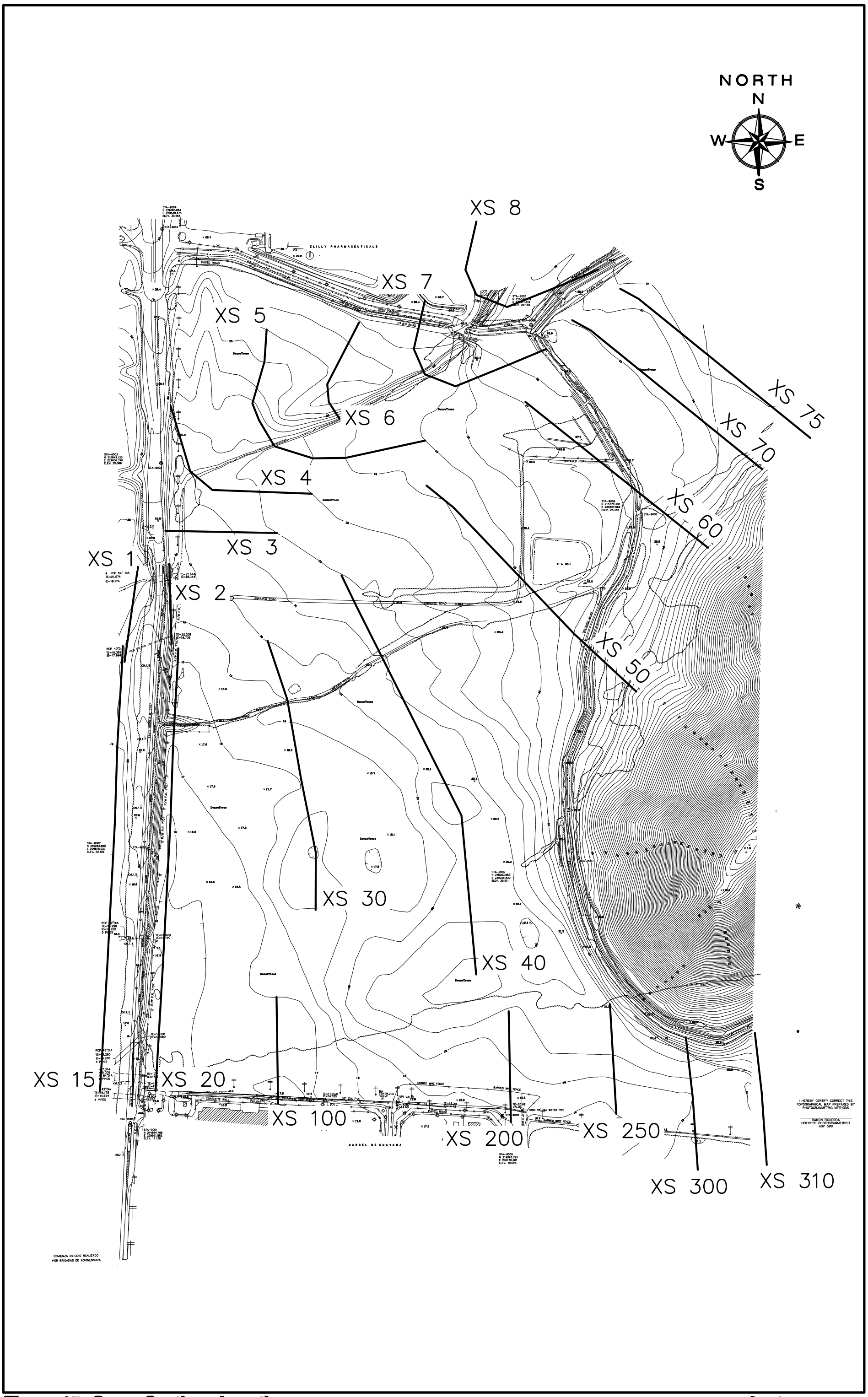

Figure 15: Cross Sections Location **Scale 1: 5,000**

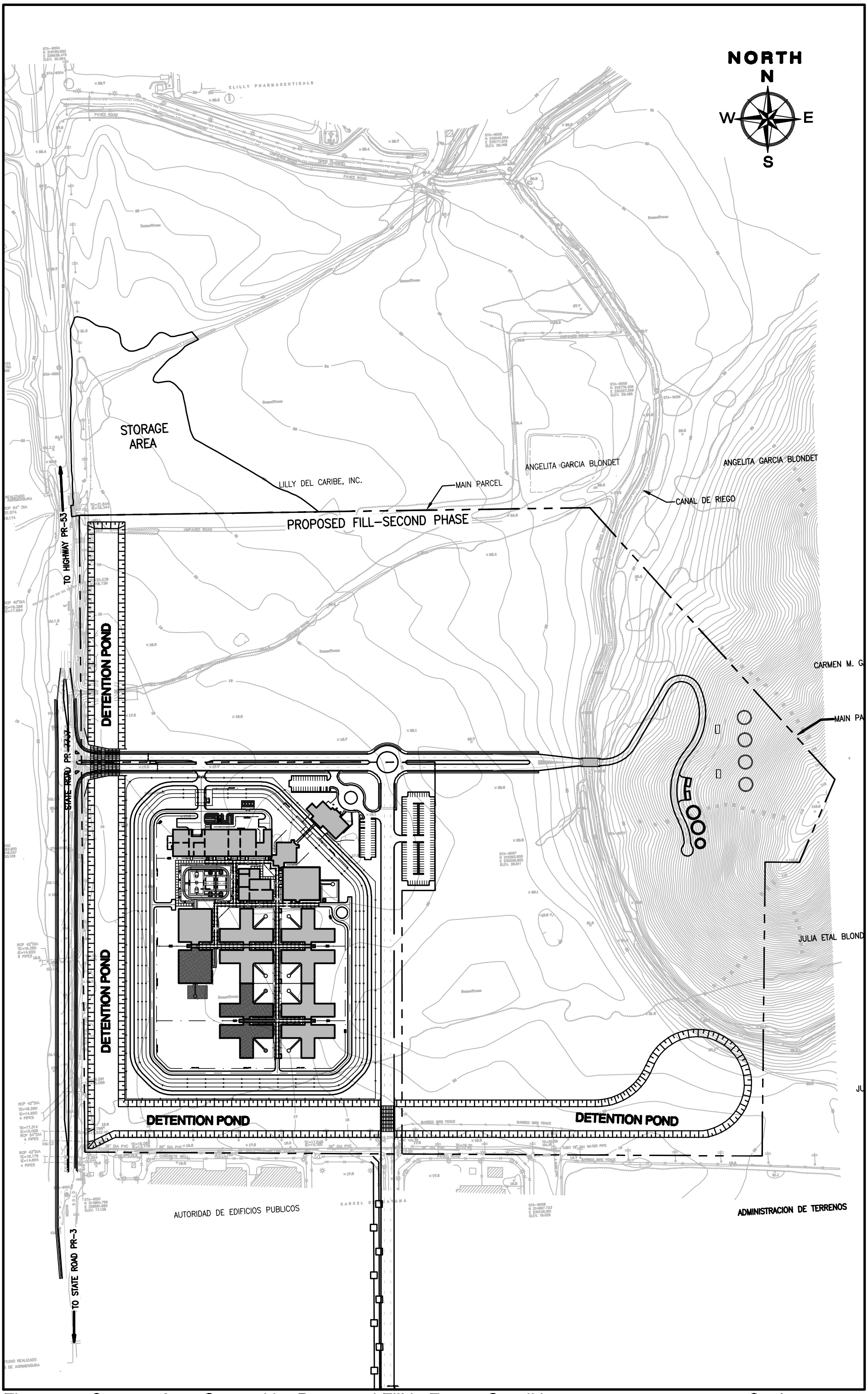

Figure 16: Storage Area Created by Proposed Fill in Future Condition

Scale 1: 4,000

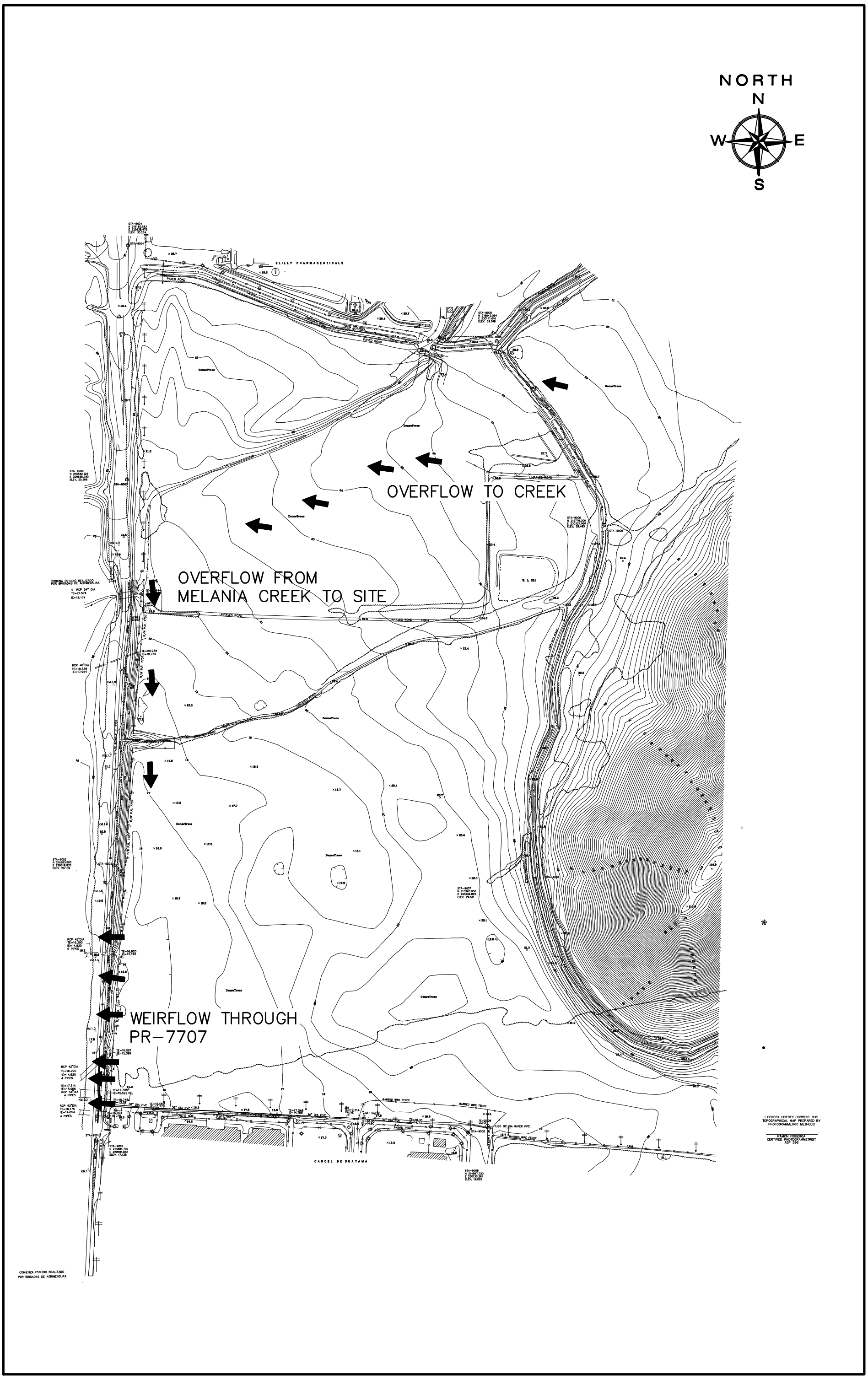

Figure 17: Overflow Condition at Study Area

Scale 1: 5,000

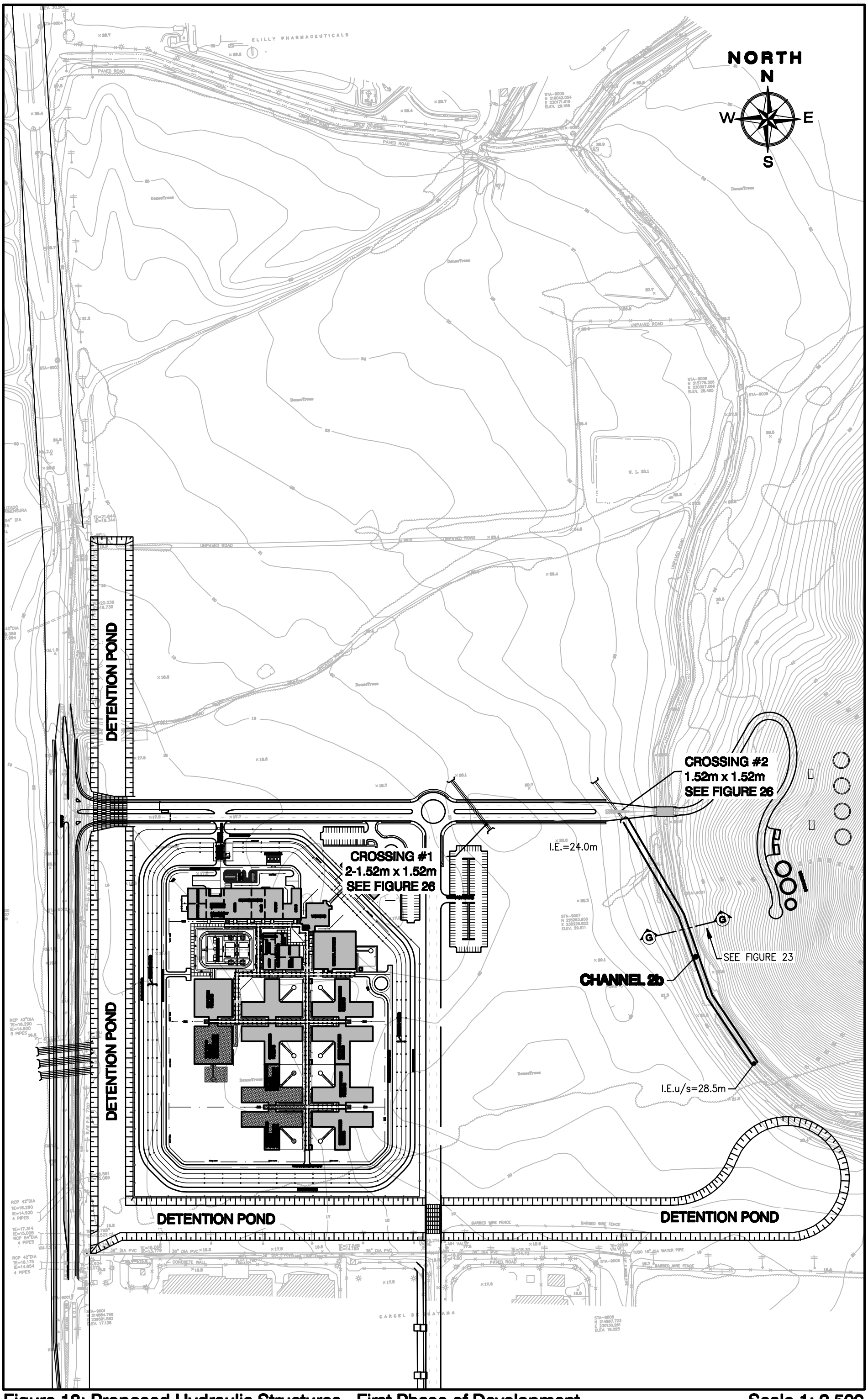

Figure 18: Proposed Hydraulic Structures - First Phase of Development

Scale 1: 3,500

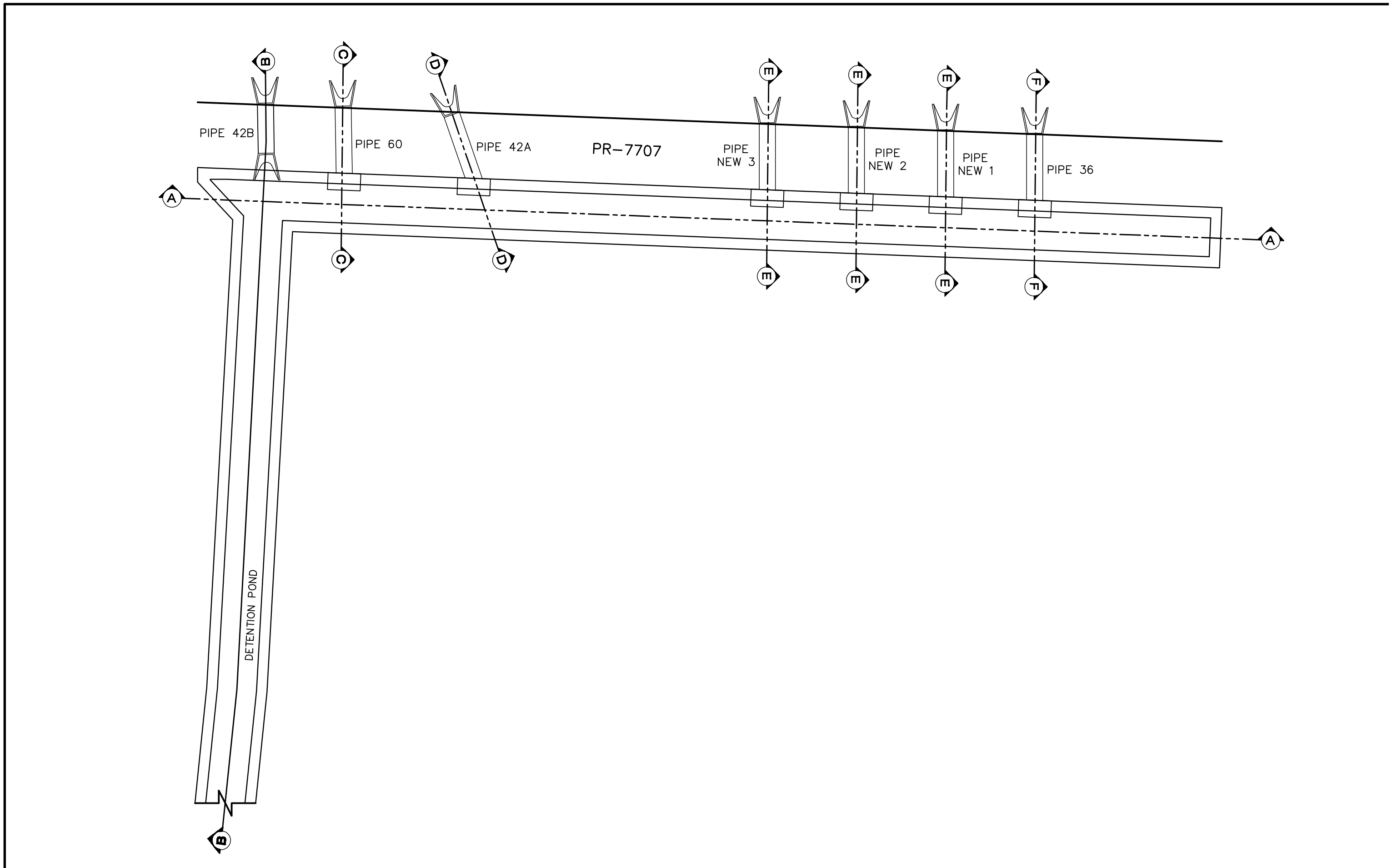

Figure 19: Schematic Design of Detention Pond

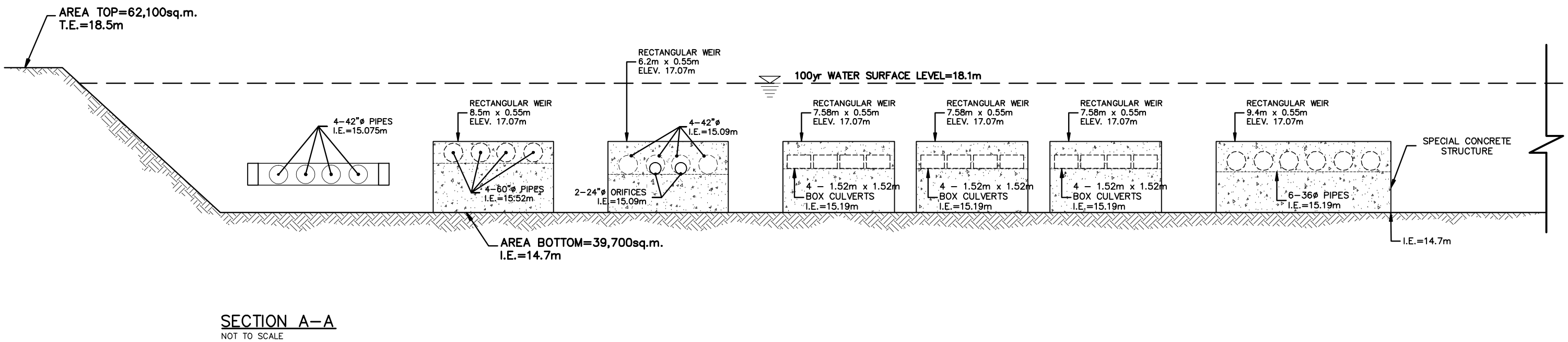

SECTION A–A

NOT TO SCALE

Figure 20: Schematic Design of Detention Pond

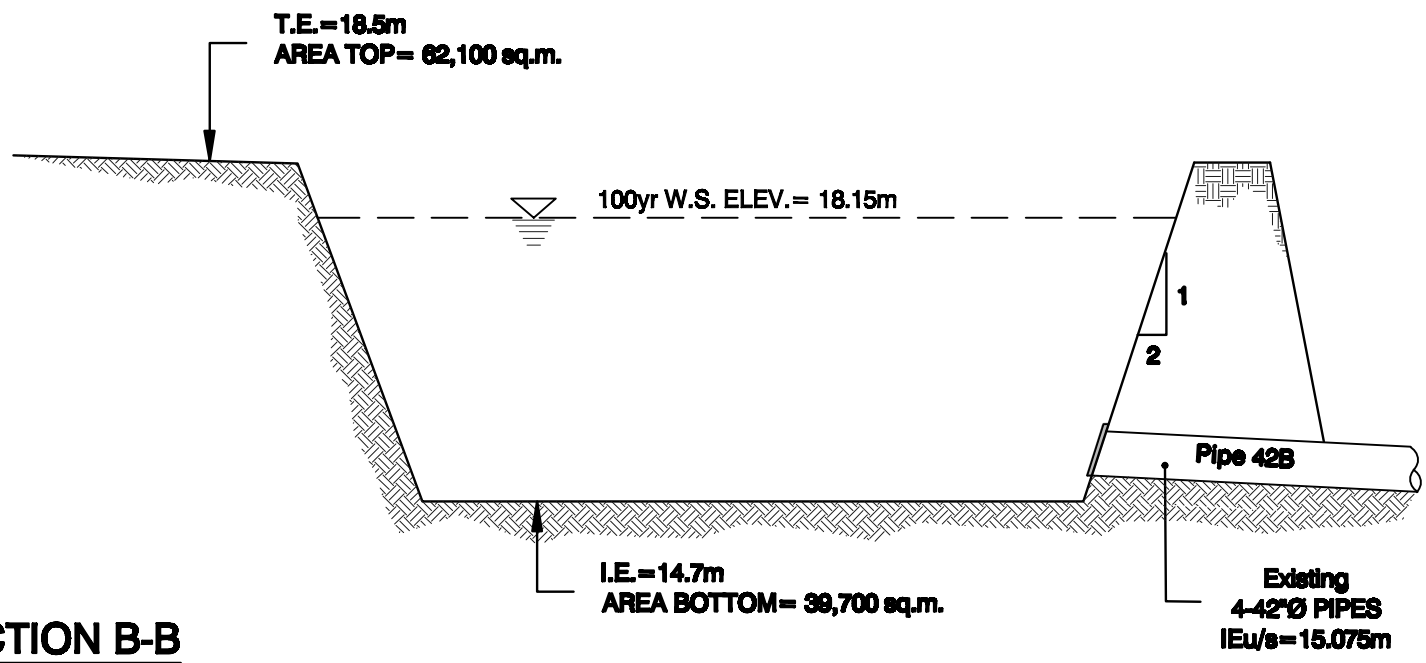

SECTION B-B

NOT TO SCALE

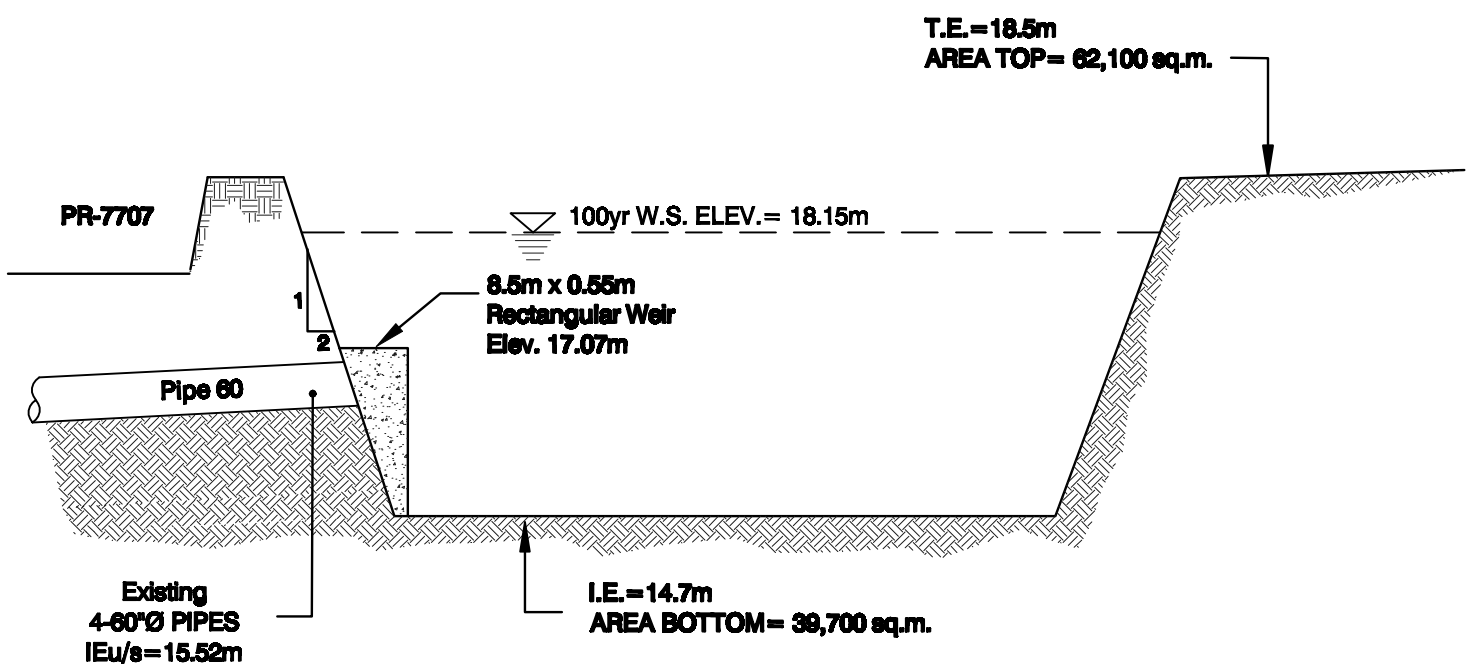

SECTION C-C

NOT TO SCALE

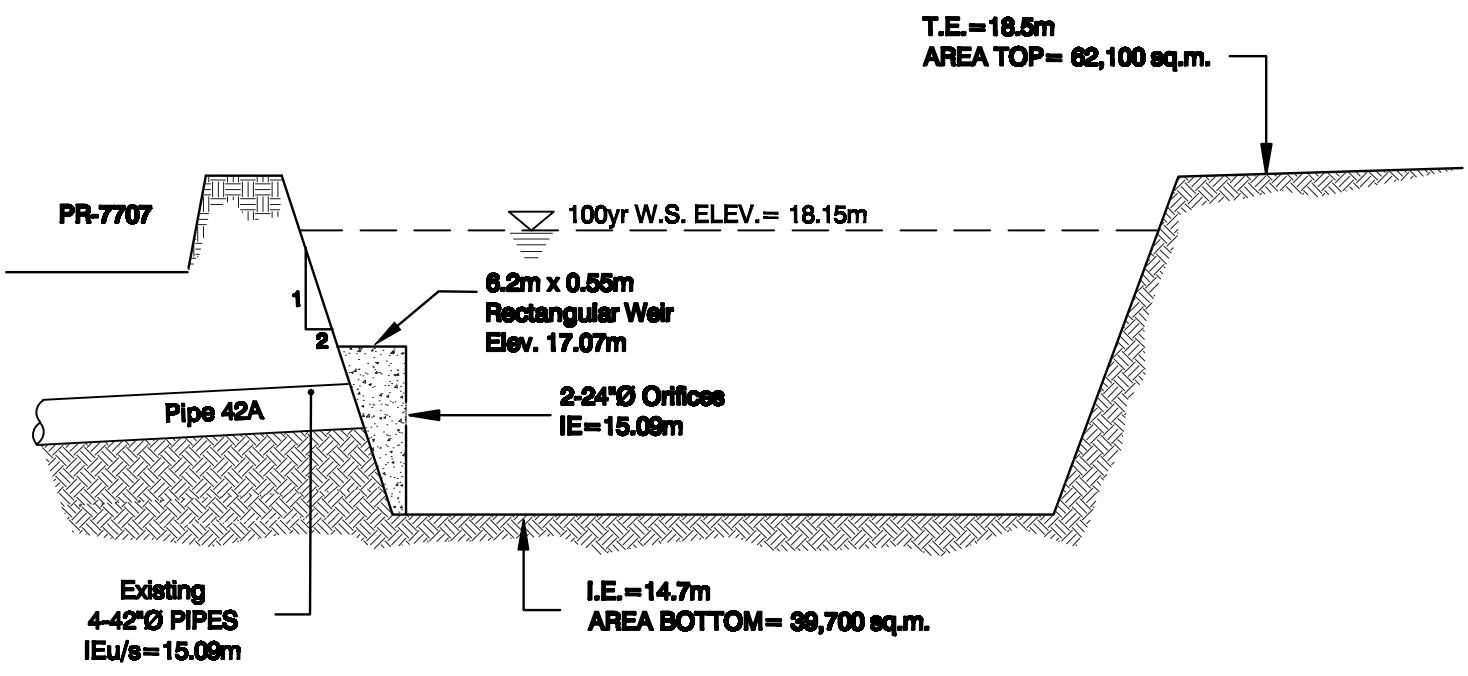

SECTION D-D

NOT TO SCALE

Figure 21: Schematic Design of Detention Pond (Cont.)

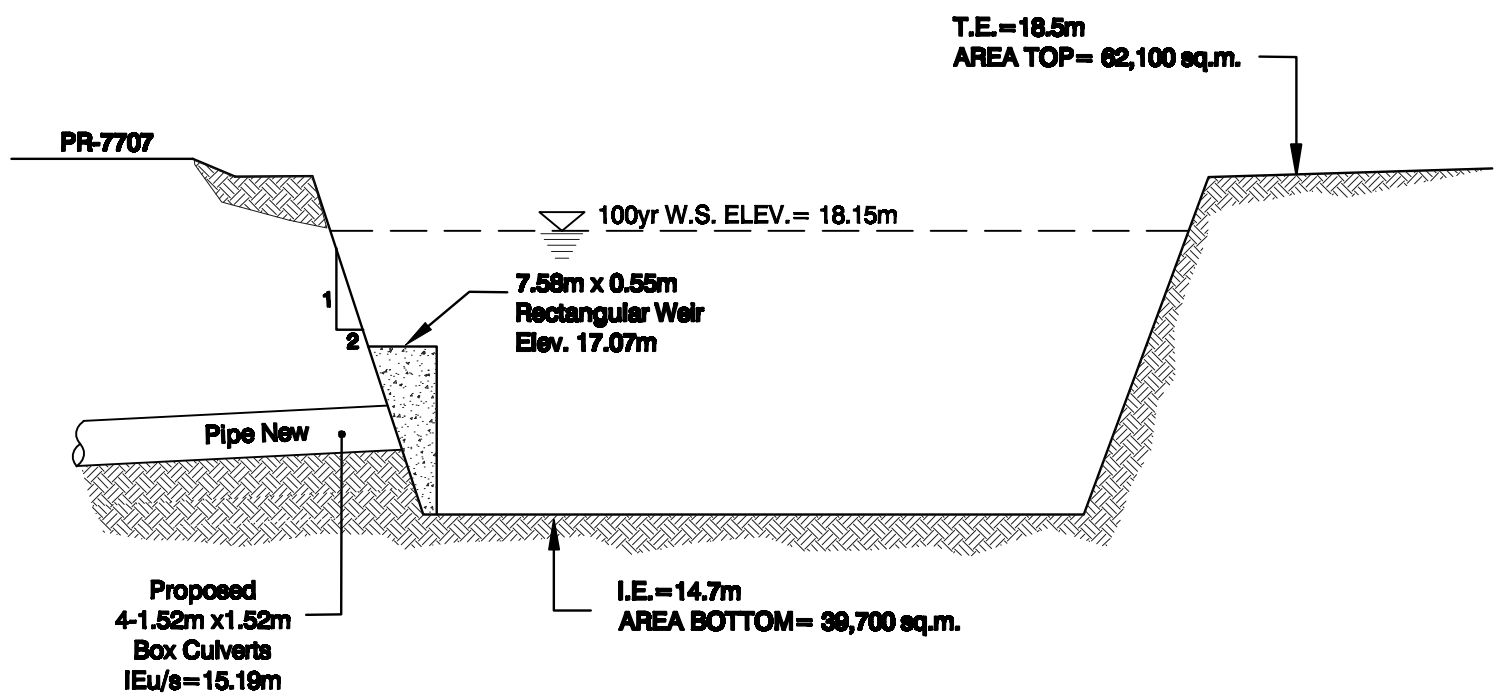

SECTION E-E

NOT TO SCALE

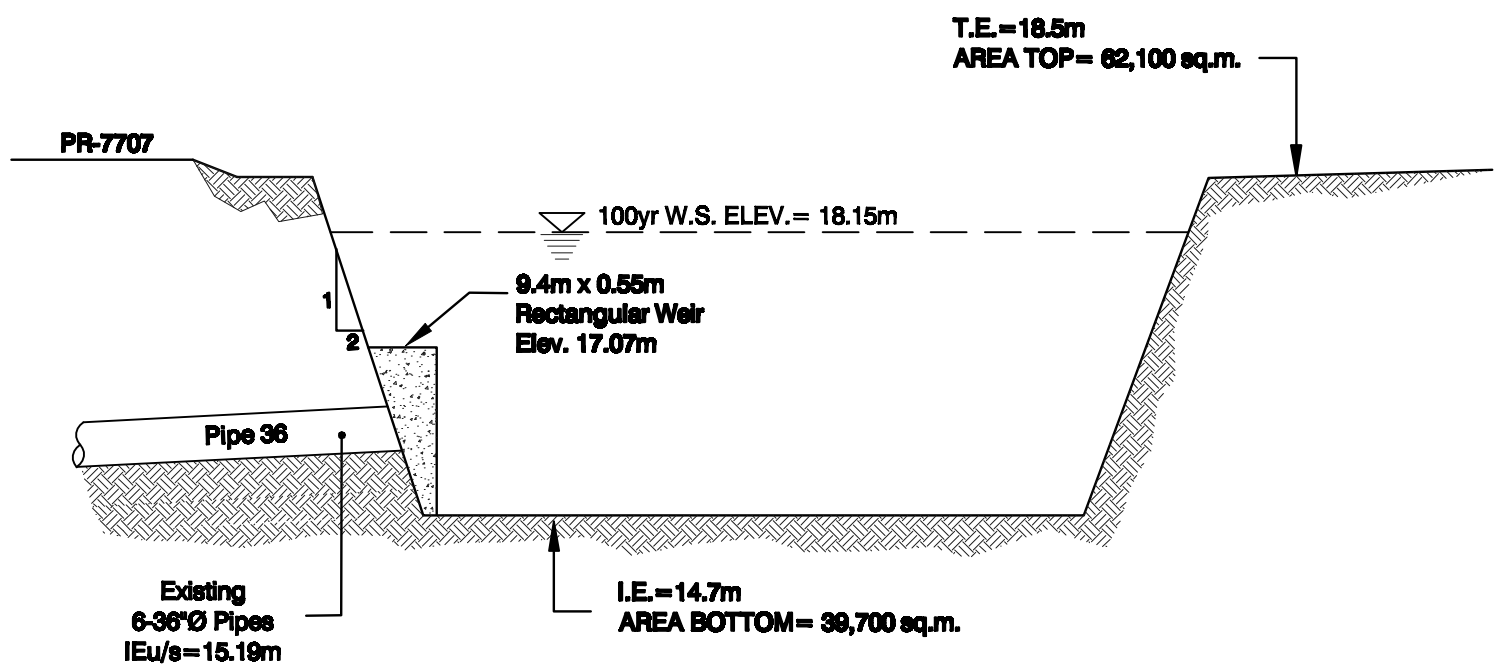

SECTION F-F

NOT TO SCALE

Figure 22: Schematic Design of Detention Pond (Cont.)

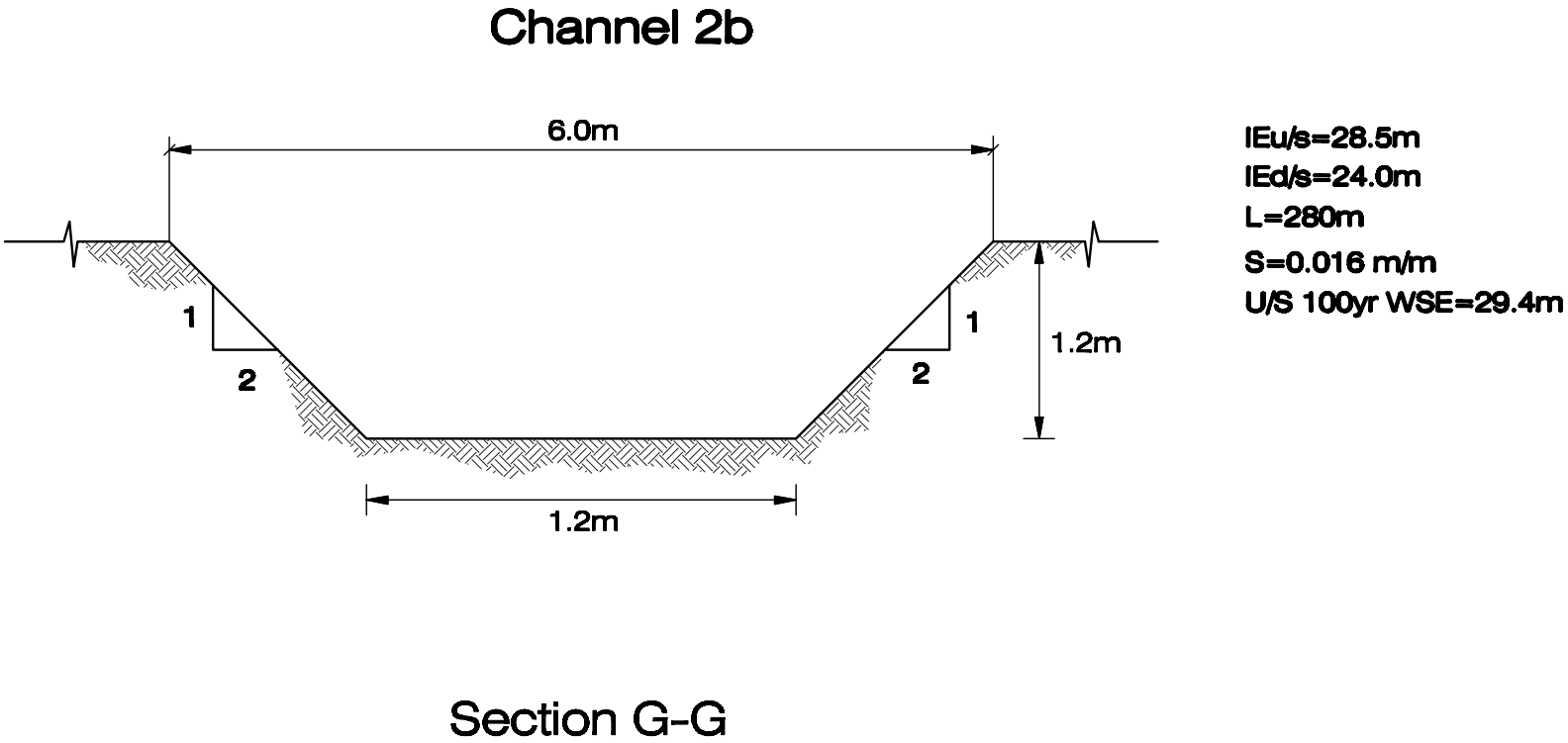

Figure 23: Detail for Channel 2b

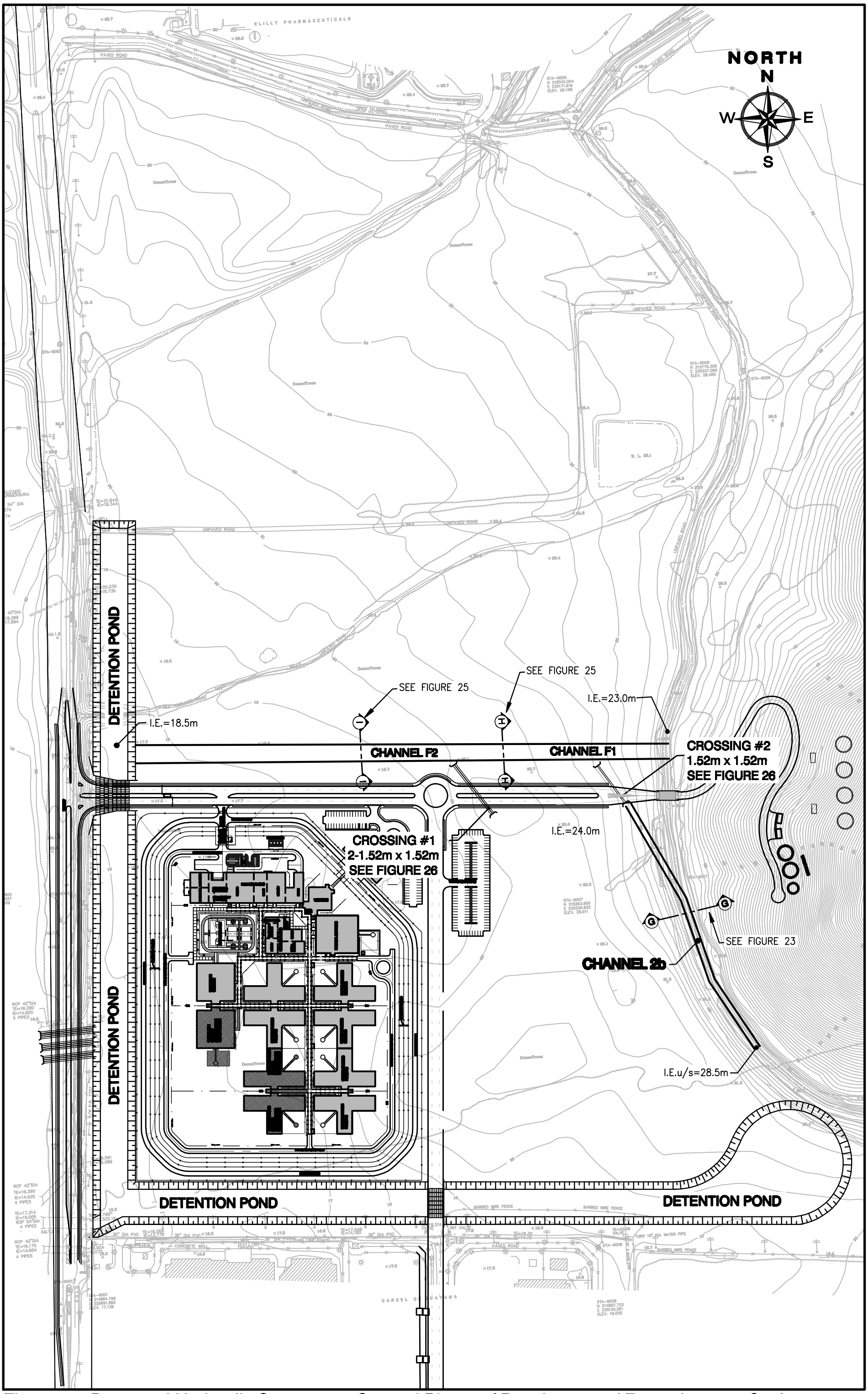

Figure 24: Proposed Hydraulic Structures - Second Phase of Development (Future) Scale 1: 3,500

Channel F1

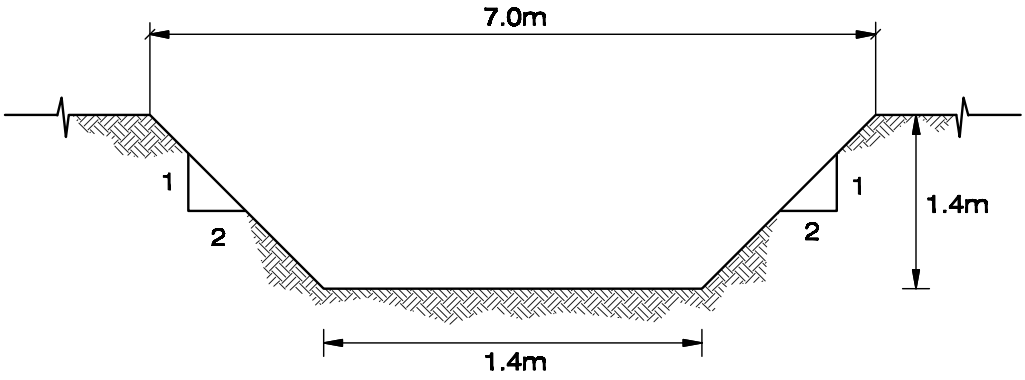

IEu/s=23.0m
IEd/s=19.5m
L=217m
S=0.016 m/m
U/S 100yr WSE=24.1m

Section H-H

Channel F2

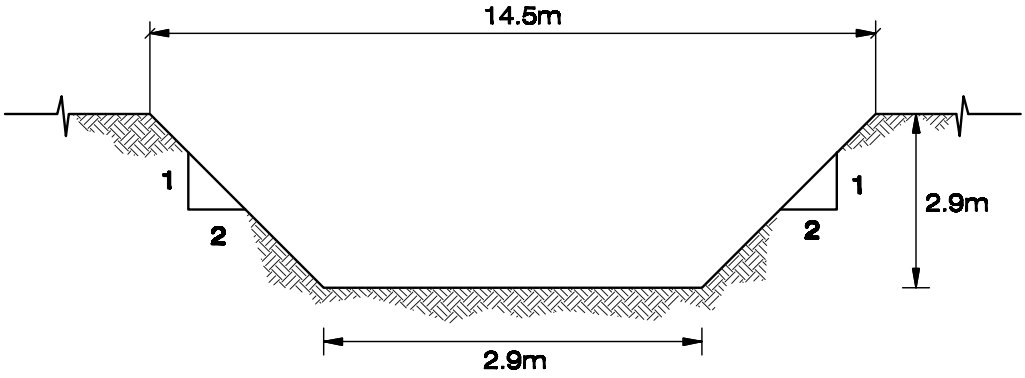

IEu/s=19.5m
IEd/s=18.5m
L=308m
S=0.0032 m/m
U/S 100yr WSE=22m

Section I-I

Figure 25: Detail for Future Condition Channels

CROSSING #1

FINISHED FLOOR ELEVATION=23.1m

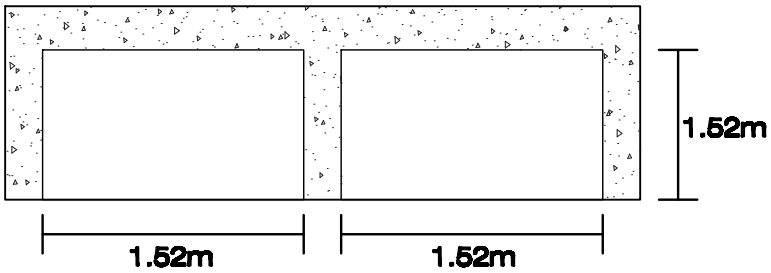

I.E.u/s= 21.0m
I.E.d/s= 19.5m
S= 0.022m/s
U/S 100yr W.S.E.=22.3m

SECTION J - J

CROSSING #2

FINISHED FLOOR ELEVATION=26.1m

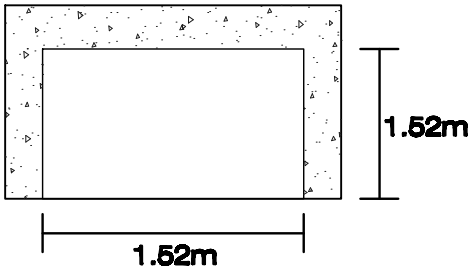

I.E.u/s= 24.0m
I.E.d/s= 23.0m
L= 47m
S= 0.02m/s
U/S 100yr W.S.E.=25.5m

Figure 28: Detail for Proposed Crossings

APPENDIX A:

adICPR Hydrologic-Hydraulic Input and Output Files for Existing Condition

==== Basins ====

Name: BasinEast
Group: BASE
Node: xs310
Type: SCS Unit Hydrograph
Status: Onsite

Unit Hydrograph: Uh484
Rainfall File: Scsii-24
Rainfall Amount(cm): 30.480
Area(ha): 49.400
Curve Number: 75.00
DCIA(%): 0.00

Peaking Factor: 484.0
Storm Duration(hrs): 24.00
Time of Conc(min): 34.00
Time Shift(hrs): 0.00
Max Allowable Q(cms): 28316.822

Name: BasinPipes
Group: BASE
Node: xs75
Type: SCS Unit Hydrograph
Status: Onsite

Unit Hydrograph: Uh484
Rainfall File: Scsii-24
Rainfall Amount(cm): 30.480
Area(ha): 91.900
Curve Number: 76.00
DCIA(%): 0.00

Peaking Factor: 484.0
Storm Duration(hrs): 24.00
Time of Conc(min): 33.00
Time Shift(hrs): 0.00
Max Allowable Q(cms): 28316.822

Name: MalaniaLake
Group: BASE
Node: lake
Type: SCS Unit Hydrograph
Status: Onsite

Unit Hydrograph: Uh484
Rainfall File: Scsii-24
Rainfall Amount(cm): 30.480
Area(ha): 243.700
Curve Number: 79.00
DCIA(%): 0.00

Peaking Factor: 484.0
Storm Duration(hrs): 24.00
Time of Conc(min): 47.00
Time Shift(hrs): 0.00
Max Allowable Q(cms): 28316.822

Name: MelaniaCreek
Group: BASE
Node: xs8
Type: SCS Unit Hydrograph
Status: Onsite

Unit Hydrograph: Uh484
Rainfall File: Scsii-24
Rainfall Amount(cm): 30.480
Area(ha): 167.500
Curve Number: 80.00
DCIA(%): 0.00

Peaking Factor: 484.0
Storm Duration(hrs): 24.00
Time of Conc(min): 48.00
Time Shift(hrs): 0.00
Max Allowable Q(cms): 28316.822

==== Nodes ====

Name: bndry1
Group: BASE
Type: Time/Stage

Base Flow(cms): 0.000

Init Stage(m): 18.000
Warn Stage(m): 0.000

Time(hrs)	Stage(m)
0.00	18.000
24.00	18.000

Name: bndry2 Base Flow(cms): 0.000 Init Stage(m): 14.710
Group: BASE Warn Stage(m): 0.000
Type: Time/Stage

Time(hrs)	Stage(m)
0.00	14.710
24.00	14.710

Name: bndry3 Base Flow(cms): 0.000 Init Stage(m): 17.500
Group: BASE Warn Stage(m): 0.000
Type: Time/Stage

Time(hrs)	Stage(m)
0.00	17.500
24.00	17.500

Name: lake Base Flow(cms): 0.000 Init Stage(m): 40.000
Group: BASE Warn Stage(m): 0.000
Type: Stage/Area

Stage(m)	Area(ha)
40.000	9.1900
42.000	9.1900
42.800	9.1900

Name: xs1 Base Flow(cms): 0.000 Init Stage(m): 18.000
Group: BASE Warn Stage(m): 0.000
Type: Stage/Area

Stage(m)	Area(ha)

Name: xs100 Base Flow(cms): 0.000 Init Stage(m): 17.000
Group: BASE Warn Stage(m): 0.000
Type: Stage/Area

Stage(m)	Area(ha)

--- ---

Name: xs15 Base Flow(cms): 0.000 Init Stage(m): 14.710
Group: BASE Warn Stage(m): 0.000
Type: Stage/Area

Stage(m)	Area(ha)

Name: xs2 Base Flow(cms): 0.000 Init Stage(m): 18.340
Group: BASE Warn Stage(m): 0.000
Type: Stage/Area

Stage(m)	Area(ha)

Name: xs20 Base Flow(cms): 0.000 Init Stage(m): 15.100
Group: BASE Warn Stage(m): 0.000
Type: Stage/Area

Stage(m)	Area(ha)

Name: xs200 Base Flow(cms): 0.000 Init Stage(m): 19.000
Group: BASE Warn Stage(m): 0.000
Type: Stage/Area

Stage(m)	Area(ha)

Name: xs250 Base Flow(cms): 0.000 Init Stage(m): 19.000
Group: BASE Warn Stage(m): 0.000
Type: Stage/Area

Stage(m)	Area(ha)

Name: xs3 Base Flow(cms): 0.000 Init Stage(m): 20.000
Group: BASE Warn Stage(m): 0.000
Type: Stage/Area

Stage(m)	Area(ha)

```
Name: xs30                Base Flow(cms): 0.000          Init Stage(m): 18.000
Group: BASE                                              Warn Stage(m): 0.000
Type: Stage/Area

Stage(m)        Area(ha)
--------------- ---------------

Name: xs300               Base Flow(cms): 0.000          Init Stage(m): 20.000
Group: BASE                                              Warn Stage(m): 0.000
Type: Stage/Area

Stage(m)        Area(ha)
--------------- ---------------

Name: xs310               Base Flow(cms): 0.000          Init Stage(m): 21.000
Group: BASE                                              Warn Stage(m): 0.000
Type: Stage/Area

Stage(m)        Area(ha)
--------------- ---------------

Name: xs4                 Base Flow(cms): 0.000          Init Stage(m): 21.000
Group: BASE                                              Warn Stage(m): 0.000
Type: Stage/Area

Stage(m)        Area(ha)
--------------- ---------------

Name: xs40                Base Flow(cms): 0.000          Init Stage(m): 21.000
Group: BASE                                              Warn Stage(m): 0.000
Type: Stage/Area

Stage(m)        Area(ha)
--------------- ---------------

Name: xs5                 Base Flow(cms): 0.000          Init Stage(m): 21.000
Group: BASE                                              Warn Stage(m): 0.000
Type: Stage/Area

Stage(m)        Area(ha)
--------------- ---------------

Name: xs50                Base Flow(cms): 0.000          Init Stage(m): 24.000
Group: BASE                                              Warn Stage(m): 0.000
Type: Stage/Area
```

```
       Stage(m)        Area(ha)
--------------- ---------------

-----------------------------------------------------------------------------------------
      Name: xs6                 Base Flow(cms): 0.000          Init Stage(m): 22.000
     Group: BASE                                              Warn Stage(m): 0.000
      Type: Stage/Area


       Stage(m)        Area(ha)
--------------- ---------------

-----------------------------------------------------------------------------------------
      Name: xs60                Base Flow(cms): 0.000          Init Stage(m): 27.000
     Group: BASE                                              Warn Stage(m): 0.000
      Type: Stage/Area


       Stage(m)        Area(ha)
--------------- ---------------

-----------------------------------------------------------------------------------------
      Name: xs7                 Base Flow(cms): 0.000          Init Stage(m): 23.380
     Group: BASE                                              Warn Stage(m): 0.000
      Type: Stage/Area


       Stage(m)        Area(ha)
--------------- ---------------

-----------------------------------------------------------------------------------------
      Name: xs70                Base Flow(cms): 0.000          Init Stage(m): 29.000
     Group: BASE                                              Warn Stage(m): 0.000
      Type: Stage/Area


       Stage(m)        Area(ha)
--------------- ---------------

-----------------------------------------------------------------------------------------
      Name: xs75                Base Flow(cms): 0.000          Init Stage(m): 31.000
     Group: BASE                                              Warn Stage(m): 0.000
      Type: Stage/Area


       Stage(m)        Area(ha)
--------------- ---------------

-----------------------------------------------------------------------------------------
      Name: xs8                 Base Flow(cms): 0.000          Init Stage(m): 25.000
     Group: BASE                                              Warn Stage(m): 0.000
      Type: Stage/Area
```

Stage (m)	Area (ha)

==== Cross Sections ====

Name: weir2 Group: BASE
Encroachment: No

Station (m)	Elevation (m)	Manning's N
0.000	19.000	0.040000
61.500	18.500	0.040000

Name: weir30 Group: BASE
Encroachment: No

Station (m)	Elevation (m)	Manning's N
0.000	16.000	0.040000
89.500	17.000	0.040000
109.500	18.000	0.040000
168.500	19.000	0.040000

Name: weir40 Group: BASE
Encroachment: No

Station (m)	Elevation (m)	Manning's N
0.000	22.000	0.040000
67.900	21.000	0.040000

Name: weir40-1 Group: BASE
Encroachment: No

Station (m)	Elevation (m)	Manning's N
0.000	17.000	0.040000
37.000	19.000	0.040000
56.600	20.000	0.040000
221.600	22.000	0.040000

Name: weir40-2 Group: BASE
Encroachment: No

Station (m)	Elevation (m)	Manning's N
0.000	21.000	0.040000

67.900	22.000	0.040000

Name: weir50 Group: BASE
Encroachment: No

Station (m)	Elevation (m)	Manning's N
0.000	23.000	0.040000
122.500	24.000	0.040000

Name: weir60 Group: BASE
Encroachment: No

Station (m)	Elevation (m)	Manning's N
0.000	27.000	0.040000
31.500	26.000	0.040000

Name: weir70 Group: BASE
Encroachment: No

Station (m)	Elevation (m)	Manning's N
0.000	28.000	0.040000
101.000	29.000	0.040000

Name: weir75 Group: BASE
Encroachment: No

Station (m)	Elevation (m)	Manning's N
0.000	31.000	0.040000
55.000	30.000	0.040000

Name: weirroad1 Group: BASE
Encroachment: No

Station (m)	Elevation (m)	Manning's N
-80.200	22.260	0.012000
-62.000	22.090	0.012000
-41.700	21.830	0.012000
-22.000	21.680	0.012000
0.000	21.760	0.012000
8.800	21.800	0.012000
19.500	21.960	0.012000
38.000	22.300	0.012000
59.000	22.810	0.012000

79.200	23.400	0.012000

Name: weirroad2 Group: BASE
Encroachment: No

Station(m)	Elevation(m)	Manning's N
0.000	16.980	0.012000
13.600	16.960	0.012000
20.300	17.170	0.012000
24.700	17.230	0.012000
35.900	17.140	0.012000
45.970	17.220	0.012000
60.100	17.300	0.012000
73.700	17.360	0.012000
80.900	17.400	0.012000
92.700	17.590	0.012000
94.160	17.630	0.012000
105.200	17.700	0.012000
126.200	17.900	0.012000
142.400	18.040	0.012000
161.000	18.170	0.012000
182.600	18.200	0.012000
203.400	18.360	0.012000
223.200	18.580	0.012000
240.900	18.860	0.012000
255.400	18.960	0.012000
275.200	19.140	0.012000
295.100	19.320	0.012000
315.700	19.510	0.012000
335.800	19.780	0.012000
354.900	19.960	0.012000
369.000	20.100	0.012000

Name: xs1 Group: BASE
Encroachment: No

Station(m)	Elevation(m)	Manning's N
0.000	18.720	0.040000
16.100	18.900	0.040000
27.200	17.870	0.040000
49.600	20.200	0.040000
76.000	21.130	0.040000
91.400	20.220	0.040000
112.200	20.080	0.040000
120.000	20.900	0.040000
127.400	21.400	0.040000
140.000	18.170	0.040000
152.800	21.490	0.040000
160.500	21.650	0.040000

Name: xs100 Group: BASE
Encroachment: No

Station(m)	Elevation(m)	Manning's N
0.000	20.000	0.040000
0.000	17.000	0.040000
40.000	17.000	0.040000
154.800	17.000	0.040000

Name: xs15 Group: BASE
Encroachment: No

Station(m)	Elevation(m)	Manning's N
0.000	16.530	0.040000
10.300	14.710	0.040000
19.000	16.710	0.040000
38.400	15.000	0.040000
50.400	16.470	0.040000
61.600	14.920	0.040000
81.700	16.510	0.040000
96.900	17.460	0.040000
128.500	17.070	0.040000
142.500	17.240	0.040000
168.900	17.400	0.040000
184.700	17.060	0.040000
214.000	16.910	0.040000
240.300	15.180	0.040000
273.200	18.000	0.040000
290.000	18.230	0.040000
305.100	18.070	0.040000
335.000	17.600	0.040000
350.800	17.500	0.040000
380.600	17.600	0.040000

Name: xs2 Group: BASE
Encroachment: No

Station(m)	Elevation(m)	Manning's N
-117.000	18.500	0.040000
-93.800	19.000	0.040000
-74.800	19.500	0.040000
-63.800	18.740	0.040000
-56.000	19.500	0.040000
-36.000	19.000	0.040000
0.000	19.000	0.040000
18.300	19.500	0.040000
21.900	18.500	0.040000
23.400	18.340	0.040000
24.500	18.500	0.040000
25.400	19.500	0.040000
26.900	20.000	0.040000
33.300	21.000	0.040000
41.400	22.000	0.040000

Name: xs20 Group: BASE

Encroachment: No

Station(m)	Elevation(m)	Manning's N
0.000	16.000	0.040000
189.400	16.000	0.040000
401.000	16.000	0.040000
501.800	17.000	0.040000
517.900	18.000	0.040000
521.800	18.500	0.040000
525.000	19.000	0.040000
529.600	19.500	0.040000
536.500	19.500	0.040000
540.900	19.000	0.040000
543.000	18.500	0.040000
545.800	18.000	0.040000
578.800	18.000	0.040000
624.400	18.000	0.040000

Name: xs200 Group: BASE
Encroachment: No

Station(m)	Elevation(m)	Manning's N
-0.100	22.000	0.040000
0.000	19.000	0.040000
88.000	20.000	0.040000
167.000	21.000	0.040000

Name: xs250 Group: BASE
Encroachment: No

Station(m)	Elevation(m)	Manning's N
-96.100	23.000	0.040000
-96.000	20.000	0.040000
0.000	19.000	0.040000
51.000	20.000	0.040000
85.300	21.000	0.040000
156.800	22.000	0.040000

Name: xs3 Group: BASE
Encroachment: No

Station(m)	Elevation(m)	Manning's N
0.000	22.000	0.040000
52.200	21.000	0.040000
131.800	20.000	0.040000
140.900	20.000	0.040000
155.500	21.000	0.040000
158.400	22.000	0.040000

161.200	23.000	0.040000

Name: xs30 Group: BASE
Encroachment: No

Station(m)	Elevation(m)	Manning's N
276.500	19.000	0.040000
359.000	19.000	0.040000
412.700	19.000	0.040000
460.700	18.000	0.040000
552.800	19.000	0.040000
587.200	19.000	0.040000
676.100	20.000	0.040000

Name: xs300 Group: BASE
Encroachment: No

Station(m)	Elevation(m)	Manning's N
-0.100	24.000	0.040000
0.000	21.000	0.040000
60.000	20.000	0.040000
86.000	21.000	0.040000
109.200	22.000	0.040000
123.400	23.000	0.040000
128.100	24.000	0.040000
136.200	26.000	0.040000
140.800	27.000	0.040000
144.900	28.000	0.040000

Name: xs4 Group: BASE
Encroachment: No

Station(m)	Elevation(m)	Manning's N
0.000	23.000	0.040000
75.700	22.000	0.040000
171.300	21.000	0.040000
184.300	21.000	0.040000
257.500	22.000	0.040000
271.700	23.000	0.040000
284.400	24.000	0.040000

Name: xs40 Group: BASE
Encroachment: No

Station(m)	Elevation(m)	Manning's N
210.000	22.000	0.040000
262.900	21.000	0.040000

405.400	21.000	0.040000
467.400	21.000	0.040000
607.900	21.000	0.040000
680.700	21.000	0.040000
814.300	22.000	0.040000

Name: xs5 Group: BASE
Encroachment: No

Station(m)	Elevation(m)	Manning's N
0.000	25.000	0.040000
118.400	24.000	0.040000
165.900	23.000	0.040000
223.100	22.000	0.040000
224.700	21.000	0.040000
227.300	21.000	0.040000
234.500	22.000	0.040000
297.500	23.000	0.040000
316.600	24.000	0.040000
356.000	25.000	0.040000
403.000	26.000	0.040000

Name: xs50 Group: BASE
Encroachment: No

Station(m)	Elevation(m)	Manning's N
0.000	35.000	0.040000
13.800	33.000	0.040000
39.100	31.000	0.040000
58.700	30.000	0.040000
86.700	27.500	0.040000
90.100	27.490	0.040000
101.200	28.000	0.040000
124.480	27.000	0.040000
155.400	26.000	0.040000
226.400	25.000	0.040000
391.200	24.000	0.040000

Name: xs6 Group: BASE
Encroachment: No

Station(m)	Elevation(m)	Manning's N
0.000	27.000	0.040000
99.000	26.000	0.040000
164.100	25.000	0.040000
250.700	24.000	0.040000
281.400	22.000	0.040000
288.000	24.000	0.040000
291.400	25.000	0.040000
295.000	26.000	0.040000
306.600	27.000	0.040000

327.700	27.000	0.040000
405.900	27.000	0.040000
441.600	28.000	0.040000

Name: xs60 Group: BASE
Encroachment: No

Station(m)	Elevation(m)	Manning's N
0.000	35.000	0.040000
34.800	32.000	0.040000
66.400	30.000	0.040000
80.330	29.000	0.040000
126.400	27.420	0.040000
130.600	27.420	0.040000
177.100	28.000	0.040000
338.200	27.000	0.040000

Name: xs7 Group: BASE
Encroachment: No

Station(m)	Elevation(m)	Manning's N
0.000	27.420	0.040000
52.800	28.000	0.040000
101.700	27.000	0.040000
116.200	26.000	0.040000
130.600	25.000	0.040000
174.400	24.000	0.040000
177.400	23.380	0.040000
181.100	24.000	0.040000
187.300	25.000	0.040000
189.600	26.000	0.040000
191.100	27.000	0.040000
224.800	28.000	0.040000
268.200	28.000	0.040000

Name: xs70 Group: BASE
Encroachment: No

Station(m)	Elevation(m)	Manning's N
0.000	35.000	0.040000
30.500	31.000	0.040000
108.700	30.000	0.040000
325.700	29.000	0.040000

Name: xs8 Group: BASE
Encroachment: No

Station(m)	Elevation(m)	Manning's N

0.000	29.040	0.040000
52.800	29.620	0.040000
101.700	28.620	0.040000
116.200	27.620	0.040000
130.600	26.620	0.040000
174.400	25.620	0.040000
177.400	25.000	0.040000
181.100	25.620	0.040000
187.300	26.620	0.040000
189.600	27.620	0.040000
191.100	28.620	0.040000
224.800	29.620	0.040000
268.200	29.620	0.040000

==== Operating Tables ====

Name: Group: BASE
Type: Bottom Clip
Function: Time vs. Depth of Clip

Time(hrs)	Clip Depth(cm)

==== Pipes ====

Name: pipe36 From Node: xs20 Length(m): 40.00
Group: BASE To Node: xs15 Count: 6
Friction Equation: Average Conveyance
Solution Algorithm: Automatic
Flow: Both
Entrance Loss Coef: 0.50
Exit Loss Coef: 1.00
Bend Loss Coef: 0.00
Outlet Ctrl Spec: Use dc or tw
Inlet Ctrl Spec: Use dn
Stabilizer Option: None

	UPSTREAM	DOWNSTREAM
Geometry:	Circular	Circular
Span(cm):	91.44	91.44
Rise(cm):	91.44	91.44
Invert(m):	15.190	15.180
Manning's N:	0.013000	0.013000
Top Clip(cm):	0.000	0.000
Bot Clip(cm):	0.000	0.000

Upstream FHWA Inlet Edge Description:
Circular Concrete: Square edge w/ headwall

Downstream FHWA Inlet Edge Description:
Circular Concrete: Square edge w/ headwall

Name: pipe40 From Node: xs2 Length(m): 62.85
Group: BASE To Node: xs1 Count: 1
Friction Equation: Average Conveyance
Solution Algorithm: Automatic
Flow: Both
Entrance Loss Coef: 0.50
Exit Loss Coef: 1.00
Bend Loss Coef: 0.00

	UPSTREAM	DOWNSTREAM
Geometry:	Circular	Circular
Span(cm):	101.60	101.60
Rise(cm):	101.60	101.60
Invert(m):	18.740	17.870

Manning's N:	0.013000	0.013000	Outlet Ctrl Spec:	Use dc or tw
Top Clip(cm):	0.000	0.000	Inlet Ctrl Spec:	Use dn
Bot Clip(cm):	0.000	0.000	Stabilizer Option:	None

Upstream FHWA Inlet Edge Description:
Circular Concrete: Square edge w/ headwall

Downstream FHWA Inlet Edge Description:
Circular Concrete: Square edge w/ headwall

Name:	pipe42A	From Node: xs20	Length(m):	50.00
Group:	BASE	To Node: xs15	Count:	4
			Friction Equation:	Average Conveyance
	UPSTREAM	DOWNSTREAM	Solution Algorithm:	Automatic
Geometry:	Circular	Circular	Flow:	Both
Span(cm):	106.68	106.68	Entrance Loss Coef:	0.50
Rise(cm):	106.68	106.68	Exit Loss Coef:	1.00
Invert(m):	15.089	14.920	Bend Loss Coef:	0.00
Manning's N:	0.013000	0.013000	Outlet Ctrl Spec:	Use dc or tw
Top Clip(cm):	0.000	0.000	Inlet Ctrl Spec:	Use dn
Bot Clip(cm):	0.000	0.000	Stabilizer Option:	None

Upstream FHWA Inlet Edge Description:
ircular Concrete: Square edge w/ headwall

Downstream FHWA Inlet Edge Description:
Circular Concrete: Square edge w/ headwall

Name:	pipe42B	From Node: xs20	Length(m):	37.00
Group:	BASE	To Node: xs15	Count:	4
			Friction Equation:	Average Conveyance
	UPSTREAM	DOWNSTREAM	Solution Algorithm:	Automatic
Geometry:	Circular	Circular	Flow:	Both
Span(cm):	106.68	106.68	Entrance Loss Coef:	0.50
Rise(cm):	106.68	106.68	Exit Loss Coef:	1.00
Invert(m):	15.075	14.710	Bend Loss Coef:	0.00
Manning's N:	0.013000	0.013000	Outlet Ctrl Spec:	Use dc or tw
Top Clip(cm):	0.000	0.000	Inlet Ctrl Spec:	Use dn
Bot Clip(cm):	0.000	0.000	Stabilizer Option:	None

Upstream FHWA Inlet Edge Description:
Circular Concrete: Square edge w/ headwall

Downstream FHWA Inlet Edge Description:
Circular Concrete: Square edge w/ headwall

Name:	pipe60	From Node: xs20	Length(m):	38.30
Group:	BASE	To Node: xs15	Count:	4

	UPSTREAM	DOWNSTREAM
Geometry:	Circular	Circular
Span(cm):	152.40	152.40
Rise(cm):	152.40	152.40
Invert(m):	15.520	15.000
Manning's N:	0.013000	0.013000
Top Clip(cm):	0.000	0.000
Bot Clip(cm):	0.000	0.000

Friction Equation: Average Conveyance
Solution Algorithm: Automatic
Flow: Both
Entrance Loss Coef: 0.50
Exit Loss Coef: 1.00
Bend Loss Coef: 0.00
Outlet Ctrl Spec: Use dc or tw
Inlet Ctrl Spec: Use dn
Stabilizer Option: None

Upstream FHWA Inlet Edge Description:
Circular Concrete: Square edge w/ headwall

Downstream FHWA Inlet Edge Description:
Circular Concrete: Square edge w/ headwall

Name: pipecreek
Group: BASE
From Node: xs2
To Node: xs1
Length(m): 20.30
Count: 4

	UPSTREAM	DOWNSTREAM
Geometry:	Circular	Circular
Span(cm):	152.40	152.40
Rise(cm):	152.40	152.40
Invert(m):	18.340	18.170
Manning's N:	0.013000	0.013000
Top Clip(cm):	0.000	0.000
Bot Clip(cm):	0.000	0.000

Friction Equation: Average Conveyance
Solution Algorithm: Automatic
Flow: Both
Entrance Loss Coef: 0.50
Exit Loss Coef: 1.00
Bend Loss Coef: 0.00
Outlet Ctrl Spec: Use dc or tw
Inlet Ctrl Spec: Use dn
Stabilizer Option: None

Upstream FHWA Inlet Edge Description:
Circular Concrete: Square edge w/ headwall

Downstream FHWA Inlet Edge Description:
Circular Concrete: Square edge w/ headwall

==========
==== Channels ==========
==========

Name: ch0
Group: BASE
From Node: xs1
To Node: bndry1
Length(m): 35.00
Count: 1

	UPSTREAM	DOWNSTREAM
Geometry:	Irregular	Irregular
Invert(m):	18.000	18.000
TClpInitZ(m):	3047.695	3047.695
Manning's N:		
Top Clip(m):	0.000	0.000
Bot Clip(m):	0.000	0.000
Main XSec:	xs1	xs1
AuxElev1(m):	0.000	0.000
Aux XSec1:		
AuxElev2(m):	0.000	0.000
Aux XSec2:		
Top Width(m):		

Friction Equation: Average Conveyance
Solution Algorithm: Automatic
Flow: Both
Contraction Coef: 0.100
Expansion Coef: 0.300
Entrance Loss Coef: 0.000
Exit Loss Coef: 0.000
Outlet Ctrl Spec: Use dc or tw
Inlet Ctrl Spec: Use dn
Stabilizer Option: None

```
     Depth(m):
  Bot Width(m):
  LtSdSlp(h/v):
  RtSdSlp(h/v):
```

```
         Name: ch10                 From Node: xs15                Length(m): 35.00
        Group: BASE                   To Node: bndry2                  Count: 1

               UPSTREAM       DOWNSTREAM                 Friction Equation: Average Conveyance
     Geometry: Irregular      Irregular                 Solution Algorithm: Automatic
    Invert(m): 14.710         14.710                                 Flow: Both
  TClpInitZ(m): 3047.695      3047.695                   Contraction Coef: 0.100
   Manning's N:                                            Expansion Coef: 0.300
   Top Clip(m): 0.000         0.000                     Entrance Loss Coef: 0.000
   Bot Clip(m): 0.000         0.000                         Exit Loss Coef: 0.000
     Main XSec: xs15          xs15                        Outlet Ctrl Spec: Use dc or tw
   AuxElev1(m): 0.000         0.000                         Inlet Ctrl Spec: Use dn
     Aux XSec1:                                           Stabilizer Option: None
   AuxElev2(m): 0.000         0.000
     Aux XSec2:
  Top Width(m):
     Depth(m):
  Bot Width(m):
  LtSdSlp(h/v):
  RtSdSlp(h/v):
```

```
         Name: ch100                From Node: xs200               Length(m): 337.00
        Group: BASE                   To Node: xs100                   Count: 1

               UPSTREAM       DOWNSTREAM                 Friction Equation: Average Conveyance
     Geometry: Irregular      Irregular                 Solution Algorithm: Automatic
    Invert(m): 19.000         17.000                                 Flow: Both
  TClpInitZ(m): 3047.695      3047.695                   Contraction Coef: 0.100
   Manning's N:                                            Expansion Coef: 0.300
   Top Clip(m): 0.000         0.000                     Entrance Loss Coef: 0.000
   Bot Clip(m): 0.000         0.000                         Exit Loss Coef: 0.000
     Main XSec: xs200         xs100                       Outlet Ctrl Spec: Use dc or tw
   AuxElev1(m): 0.000         0.000                         Inlet Ctrl Spec: Use dn
     Aux XSec1:                                           Stabilizer Option: None
   AuxElev2(m): 0.000         0.000
     Aux XSec2:
  Top Width(m):
     Depth(m):
  Bot Width(m):
  LtSdSlp(h/v):
  RtSdSlp(h/v):
```

```
         Name: ch2                  From Node: xs3                 Length(m): 61.00
        Group: BASE                   To Node: xs2                     Count: 1

               UPSTREAM       DOWNSTREAM                 Friction Equation: Average Conveyance
     Geometry: Irregular      Irregular                 Solution Algorithm: Automatic
    Invert(m): 20.000         18.340                                 Flow: Both
  TClpInitZ(m): 3047.695      3047.695                   Contraction Coef: 0.100
```

Manning's N:			Expansion Coef:	0.300
Top Clip(m):	0.000	0.000	Entrance Loss Coef:	0.000
Bot Clip(m):	0.000	0.000	Exit Loss Coef:	0.000
Main XSec:	xs3	xs2	Outlet Ctrl Spec:	Use dc or tw
AuxElev1(m):	0.000	0.000	Inlet Ctrl Spec:	Use dn
Aux XSec1:			Stabilizer Option:	None
AuxElev2(m):	0.000	0.000		
Aux XSec2:				
Top Width(m):				
Depth(m):				
Bot Width(m):				
LtSdSlp(h/v):				
RtSdSlp(h/v):				

Name:	ch20	From Node: xs30	Length(m):	206.00
Group:	BASE	To Node: xs20	Count:	1

	UPSTREAM	DOWNSTREAM		
Geometry:	Irregular	Irregular	Friction Equation:	Average Conveyance
Invert(m):	18.000	15.100	Solution Algorithm:	Automatic
TClpInitZ(m):	3047.695	3047.695	Flow:	Both
Manning's N:			Contraction Coef:	0.100
Top Clip(m):	0.000	0.000	Expansion Coef:	0.300
Bot Clip(m):	0.000	0.000	Entrance Loss Coef:	0.000
Main XSec:	xs30	xs20	Exit Loss Coef:	0.000
AuxElev1(m):	0.000	0.000	Outlet Ctrl Spec:	Use dc or tw
Aux XSec1:			Inlet Ctrl Spec:	Use dn
AuxElev2(m):	0.000	0.000	Stabilizer Option:	None
Aux XSec2:				
Top Width(m):				
Depth(m):				
Bot Width(m):				
LtSdSlp(h/v):				
RtSdSlp(h/v):				

Name:	ch20-2	From Node: xs100	Length(m):	175.00
Group:	BASE	To Node: xs20	Count:	1

	UPSTREAM	DOWNSTREAM		
Geometry:	Irregular	Irregular	Friction Equation:	Average Conveyance
Invert(m):	17.000	15.100	Solution Algorithm:	Automatic
TClpInitZ(m):	3047.695	3047.695	Flow:	Both
Manning's N:			Contraction Coef:	0.100
Top Clip(m):	0.000	0.000	Expansion Coef:	0.300
Bot Clip(m):	0.000	0.000	Entrance Loss Coef:	0.000
Main XSec:	xs100	xs20	Exit Loss Coef:	0.000
AuxElev1(m):	0.000	0.000	Outlet Ctrl Spec:	Use dc or tw
Aux XSec1:			Inlet Ctrl Spec:	Use dn
AuxElev2(m):	0.000	0.000	Stabilizer Option:	None
Aux XSec2:				
Top Width(m):				
Depth(m):				
Bot Width(m):				
LtSdSlp(h/v):				
RtSdSlp(h/v):				

```
Name: ch200                From Node: xs250              Length(m): 152.00
Group: BASE                  To Node: xs200                  Count: 1

                UPSTREAM       DOWNSTREAM                 Friction Equation: Average Conveyance
     Geometry: Irregular       Irregular                Solution Algorithm: Automatic
    Invert(m): 19.000          19.000                              Flow: Both
  TClpInitZ(m): 3047.695       3047.695                  Contraction Coef: 0.100
   Manning's N:                                            Expansion Coef: 0.300
   Top Clip(m): 0.000          0.000                   Entrance Loss Coef: 0.000
   Bot Clip(m): 0.000          0.000                       Exit Loss Coef: 0.000
     Main XSec: xs250          xs200                     Outlet Ctrl Spec: Use dc or tw
   AuxElev1(m): 0.000          0.000                      Inlet Ctrl Spec: Use dn
     Aux XSec1:                                          Stabilizer Option: None
   AuxElev2(m): 0.000          0.000
     Aux XSec2:
  Top Width(m):
      Depth(m):
  Bot Width(m):
  LtSdSlp(h/v):
  RtSdSlp(h/v):
```

```
Name: ch250                From Node: xs300              Length(m): 112.00
Group: BASE                  To Node: xs250                  Count: 1

                UPSTREAM       DOWNSTREAM                 Friction Equation: Average Conveyance
     Geometry: Irregular       Irregular                Solution Algorithm: Automatic
    Invert(m): 20.000          19.000                              Flow: Both
  TClpInitZ(m): 3047.695       3047.695                  Contraction Coef: 0.100
   Manning's N:                                            Expansion Coef: 0.300
   Top Clip(m): 0.000          0.000                   Entrance Loss Coef: 0.000
   Bot Clip(m): 0.000          0.000                       Exit Loss Coef: 0.000
     Main XSec: xs300          xs250                     Outlet Ctrl Spec: Use dc or tw
   AuxElev1(m): 0.000          0.000                      Inlet Ctrl Spec: Use dn
     Aux XSec1:                                          Stabilizer Option: None
   AuxElev2(m): 0.000          0.000
     Aux XSec2:
  Top Width(m):
      Depth(m):
  Bot Width(m):
  LtSdSlp(h/v):
  RtSdSlp(h/v):
```

```
Name: ch3                  From Node: xs4                Length(m): 102.00
Group: BASE                  To Node: xs3                    Count: 1

                UPSTREAM       DOWNSTREAM                 Friction Equation: Average Conveyance
     Geometry: Irregular       Irregular                Solution Algorithm: Automatic
    Invert(m): 21.000          20.000                              Flow: Both
  TClpInitZ(m): 3047.695       3047.695                  Contraction Coef: 0.100
   Manning's N:                                            Expansion Coef: 0.300
   Top Clip(m): 0.000          0.000                   Entrance Loss Coef: 0.000
   Bot Clip(m): 0.000          0.000                       Exit Loss Coef: 0.000
     Main XSec: xs4            xs3                       Outlet Ctrl Spec: Use dc or tw
   AuxElev1(m): 0.000          0.000                      Inlet Ctrl Spec: Use dn
     Aux XSec1:                                          Stabilizer Option: None
```

```
  AuxElev2(m): 0.000          0.000
    Aux XSec2:
  Top Width(m):
      Depth(m):
  Bot Width(m):
  LtSdSlp(h/v):
  RtSdSlp(h/v):
```

```
         Name: ch30                 From Node: xs40                Length(m): 224.00
        Group: BASE                   To Node: xs30                    Count: 1

                UPSTREAM       DOWNSTREAM                 Friction Equation: Average Conveyance
     Geometry: Irregular       Irregular                Solution Algorithm: Automatic
    Invert(m): 21.000          18.000                               Flow: Both
  TClpInitZ(m): 3047.695       3047.695                   Contraction Coef: 0.100
   Manning's N:                                             Expansion Coef: 0.300
   Top Clip(m): 0.000          0.000                    Entrance Loss Coef: 0.000
   Bot Clip(m): 0.000          0.000                        Exit Loss Coef: 0.000
     Main XSec: xs40           xs30                       Outlet Ctrl Spec: Use dc or tw
   AuxElev1(m): 0.000          0.000                        Inlet Ctrl Spec: Use dn
     Aux XSec1:                                          Stabilizer Option: None
   AuxElev2(m): 0.000          0.000
     Aux XSec2:
  Top Width(m):
      Depth(m):
  Bot Width(m):
  LtSdSlp(h/v):
  RtSdSlp(h/v):
```

```
         Name: ch300                From Node: xs310               Length(m): 100.00
        Group: BASE                   To Node: xs300                   Count: 1

                UPSTREAM       DOWNSTREAM                 Friction Equation: Average Conveyance
     Geometry: Irregular       Irregular                Solution Algorithm: Automatic
    Invert(m): 21.000          20.000                               Flow: Both
  TClpInitZ(m): 3047.695       3047.695                   Contraction Coef: 0.100
   Manning's N:                                             Expansion Coef: 0.300
   Top Clip(m): 0.000          0.000                    Entrance Loss Coef: 0.000
   Bot Clip(m): 0.000          0.000                        Exit Loss Coef: 0.000
     Main XSec: xs300          xs300                      Outlet Ctrl Spec: Use dc or tw
   AuxElev1(m): 0.000          0.000                        Inlet Ctrl Spec: Use dn
     Aux XSec1:                                          Stabilizer Option: None
   AuxElev2(m): 0.000          0.000
     Aux XSec2:
  Top Width(m):
      Depth(m):
  Bot Width(m):
  LtSdSlp(h/v):
  RtSdSlp(h/v):
```

```
         Name: ch4                  From Node: xs5                 Length(m): 125.00
        Group: BASE                   To Node: xs4                     Count: 1

                UPSTREAM       DOWNSTREAM                 Friction Equation: Average Conveyance
```

Geometry:	Irregular	Irregular	Solution Algorithm:	Automatic
Invert(m):	21.000	21.000	Flow:	Both
TClpInitZ(m):	3047.695	3047.695	Contraction Coef:	0.100
Manning's N:			Expansion Coef:	0.300
Top Clip(m):	0.000	0.000	Entrance Loss Coef:	0.000
Bot Clip(m):	0.000	0.000	Exit Loss Coef:	0.000
Main XSec:	xs5	xs4	Outlet Ctrl Spec:	Use dc or tw
AuxElev1(m):	0.000	0.000	Inlet Ctrl Spec:	Use dn
Aux XSec1:			Stabilizer Option:	None
AuxElev2(m):	0.000	0.000		
Aux XSec2:				
Top Width(m):				
Depth(m):				
Bot Width(m):				
LtSdSlp(h/v):				
RtSdSlp(h/v):				

Name:	ch40	From Node: xs50	Length(m):	230.00
Group:	BASE	To Node: xs40	Count:	1

	UPSTREAM	DOWNSTREAM		
			Friction Equation:	Average Conveyance
Geometry:	Irregular	Irregular	Solution Algorithm:	Automatic
Invert(m):	24.000	21.000	Flow:	Both
TClpInitZ(m):	3047.695	3047.695	Contraction Coef:	0.100
Manning's N:			Expansion Coef:	0.300
Top Clip(m):	0.000	0.000	Entrance Loss Coef:	0.000
Bot Clip(m):	0.000	0.000	Exit Loss Coef:	0.000
Main XSec:	xs50	xs40	Outlet Ctrl Spec:	Use dc or tw
AuxElev1(m):	0.000	0.000	Inlet Ctrl Spec:	Use dn
Aux XSec1:			Stabilizer Option:	None
AuxElev2(m):	0.000	0.000		
Aux XSec2:				
Top Width(m):				
Depth(m):				
Bot Width(m):				
LtSdSlp(h/v):				
RtSdSlp(h/v):				

Name:	ch5	From Node: xs6	Length(m):	104.00
Group:	BASE	To Node: xs5	Count:	1

	UPSTREAM	DOWNSTREAM		
			Friction Equation:	Average Conveyance
Geometry:	Irregular	Irregular	Solution Algorithm:	Automatic
Invert(m):	22.000	21.000	Flow:	Both
TClpInitZ(m):	3047.695	3047.695	Contraction Coef:	0.100
Manning's N:			Expansion Coef:	0.300
Top Clip(m):	0.000	0.000	Entrance Loss Coef:	0.000
Bot Clip(m):	0.000	0.000	Exit Loss Coef:	0.000
Main XSec:	xs6	xs5	Outlet Ctrl Spec:	Use dc or tw
AuxElev1(m):	0.000	0.000	Inlet Ctrl Spec:	Use dn
Aux XSec1:			Stabilizer Option:	None
AuxElev2(m):	0.000	0.000		
Aux XSec2:				
Top Width(m):				
Depth(m):				
Bot Width(m):				
LtSdSlp(h/v):				

RtSdSlp(h/v):

Name: ch50 | From Node: xs60 | Length(m): 178.00
Group: BASE | To Node: xs50 | Count: 1

	UPSTREAM	DOWNSTREAM
Geometry:	Irregular	Irregular
Invert(m):	27.000	24.000
TClpInitZ(m):	3047.695	3047.695
Manning's N:		
Top Clip(m):	0.000	0.000
Bot Clip(m):	0.000	0.000
Main XSec:	xs60	xs50
AuxElev1(m):	0.000	0.000
Aux XSec1:		
AuxElev2(m):	0.000	0.000
Aux XSec2:		
Top Width(m):		
Depth(m):		
Bot Width(m):		
LtSdSlp(h/v):		
RtSdSlp(h/v):		

Friction Equation:	Average Conveyance
Solution Algorithm:	Automatic
Flow:	Both
Contraction Coef:	0.100
Expansion Coef:	0.300
Entrance Loss Coef:	0.000
Exit Loss Coef:	0.000
Outlet Ctrl Spec:	Use dc or tw
Inlet Ctrl Spec:	Use dn
Stabilizer Option:	None

Name: ch6 | From Node: xs7 | Length(m): 140.00
Group: BASE | To Node: xs6 | Count: 1

	UPSTREAM	DOWNSTREAM
Geometry:	Irregular	Irregular
Invert(m):	23.380	22.000
TClpInitZ(m):	3047.695	3047.695
Manning's N:		
Top Clip(m):	0.000	0.000
Bot Clip(m):	0.000	0.000
Main XSec:	xs7	xs6
AuxElev1(m):	0.000	0.000
Aux XSec1:		
AuxElev2(m):	0.000	0.000
Aux XSec2:		
Top Width(m):		
Depth(m):		
Bot Width(m):		
LtSdSlp(h/v):		
RtSdSlp(h/v):		

Friction Equation:	Average Conveyance
Solution Algorithm:	Automatic
Flow:	Both
Contraction Coef:	0.100
Expansion Coef:	0.300
Entrance Loss Coef:	0.000
Exit Loss Coef:	0.000
Outlet Ctrl Spec:	Use dc or tw
Inlet Ctrl Spec:	Use dn
Stabilizer Option:	None

Name: ch60 | From Node: xs70 | Length(m): 137.00
Group: BASE | To Node: xs60 | Count: 1

	UPSTREAM	DOWNSTREAM
Geometry:	Irregular	Irregular
Invert(m):	29.000	27.000
TClpInitZ(m):	3047.695	3047.695
Manning's N:		
Top Clip(m):	0.000	0.000
Bot Clip(m):	0.000	0.000

Friction Equation:	Average Conveyance
Solution Algorithm:	Automatic
Flow:	Both
Contraction Coef:	0.100
Expansion Coef:	0.300
Entrance Loss Coef:	0.000
Exit Loss Coef:	0.000

```
    Main XSec: xs70          xs60                    Outlet Ctrl Spec: Use dc or tw
  AuxElev1(m): 0.000         0.000                     Inlet Ctrl Spec: Use dn
    Aux XSec1:                                       Stabilizer Option: None
  AuxElev2(m): 0.000         0.000
    Aux XSec2:
 Top Width(m):
     Depth(m):
 Bot Width(m):
 LtSdSlp(h/v):
 RtSdSlp(h/v):
```

```
         Name: ch7                 From Node: xs8                Length(m): 142.00
        Group: BASE                  To Node: xs7                    Count: 1

               UPSTREAM       DOWNSTREAM                 Friction Equation: Average Conveyance
     Geometry: Irregular      Irregular                Solution Algorithm: Automatic
    Invert(m): 25.000         23.380                               Flow: Both
 TClpInitZ(m): 3047.695       3047.695                   Contraction Coef: 0.100
  Manning's N:                                            Expansion Coef: 0.300
  Top Clip(m): 0.000          0.000                   Entrance Loss Coef: 0.000
  Bot Clip(m): 0.000          0.000                       Exit Loss Coef: 0.000
    Main XSec: xs8            xs7                       Outlet Ctrl Spec: Use dc or tw
  AuxElev1(m): 0.000          0.000                       Inlet Ctrl Spec: Use dn
    Aux XSec1:                                         Stabilizer Option: None
  AuxElev2(m): 0.000          0.000
    Aux XSec2:
 Top Width(m):
     Depth(m):
 Bot Width(m):
 LtSdSlp(h/v):
 RtSdSlp(h/v):
```

```
         Name: ch70                From Node: xs75               Length(m): 80.00
        Group: BASE                  To Node: xs70                   Count: 1

               UPSTREAM       DOWNSTREAM                 Friction Equation: Average Conveyance
     Geometry: Irregular      Irregular                Solution Algorithm: Automatic
    Invert(m): 31.000         29.000                               Flow: Both
 TClpInitZ(m): 3047.695       3047.695                   Contraction Coef: 0.100
  Manning's N:                                            Expansion Coef: 0.300
  Top Clip(m): 0.000          0.000                   Entrance Loss Coef: 0.000
  Bot Clip(m): 0.000          0.000                       Exit Loss Coef: 0.000
    Main XSec: xs70           xs70                      Outlet Ctrl Spec: Use dc or tw
  AuxElev1(m): 0.000          0.000                       Inlet Ctrl Spec: Use dn
    Aux XSec1:                                         Stabilizer Option: None
  AuxElev2(m): 0.000          0.000
    Aux XSec2:
 Top Width(m):
     Depth(m):
 Bot Width(m):
 LtSdSlp(h/v):
 RtSdSlp(h/v):
```

==========
==== Drop Strcutures ==========

```
==========================================================================================

        Name:                        From Node:                      Length(m): 0.00
       Group: BASE                     To Node:                          Count: 1

              UPSTREAM        DOWNSTREAM                  Friction Equation: Average Conveyance
    Geometry: Circular        Circular                  Solution Algorithm: Automatic
    Span(cm): 0.00            0.00                                   Flow: Both
    Rise(cm): 0.00            0.00                   Entrance Loss Coef: 0.000
   Invert(m): 0.000           0.000                      Exit Loss Coef: 0.000
 Manning's N: 0.000000        0.000000                 Outlet Ctrl Spec: Use dc or tw
Top Clip(cm): 0.000           0.000                     Inlet Ctrl Spec: Use dn
Bot Clip(cm): 0.000           0.000                       Solution Incs: 10

Upstream FHWA Inlet Edge Description:
Circular Concrete: Square edge w/ headwall

Downstream FHWA Inlet Edge Description:
Circular Concrete: Square edge w/ headwall


==========================================================================================
==== Weirs ===============================================================================
==========================================================================================

        Name: Spillwaylake1        From Node: lake
       Group: BASE                   To Node: xs75
        Flow: Both                     Count: 1
        Type: Vertical: Paved       Geometry: Rectangular

                   Span(cm): 900.00
                   Rise(cm): 280.00
                  Invert(m): 40.000
       Control Elevation(m): 40.000
                                                TABLE
            Bottom Clip(cm): 0.000
               Top Clip(cm): 0.000
        Weir Discharge Coef: 2.650
     Orifice Discharge Coef: 0.850


------------------------------------------------------------------------------------------

        Name: Spillwaylake2        From Node: lake
       Group: BASE                   To Node: xs75
        Flow: Both                     Count: 1
        Type: Vertical: Paved       Geometry: Rectangular

                   Span(cm): 600.00
                   Rise(cm): 280.00
                  Invert(m): 40.000
       Control Elevation(m): 40.000
                                                TABLE
            Bottom Clip(cm): 0.000
               Top Clip(cm): 0.000
        Weir Discharge Coef: 2.650
     Orifice Discharge Coef: 0.850


------------------------------------------------------------------------------------------
```

```
        Name: weir100-2           From Node: xs100
       Group: BASE                  To Node: xs20
        Flow: Both                    Count: 1
        Type: Vertical: Gravel     Geometry: Rectangular

                   Span(cm): 10000.00
                   Rise(cm): 7.62
                  Invert(m): 17.000
      Control Elevation(m): 17.000
                                             TABLE
          Bottom Clip(cm): 0.000
             Top Clip(cm): 0.000
      Weir Discharge Coef: 2.650
    Orifice Discharge Coef: 0.850


        Name: weir2               From Node: xs2
       Group: BASE                  To Node: xs20
        Flow: Both                    Count: 1
        Type: Vertical: Gravel     Geometry: Irregular

                       XSec: weir2
                  Invert(m): 19.000
      Control Elevation(m): 19.000
     Struct Opening Dim(m): 3047.70
                                             TABLE
            Bottom Clip(m): 0.000
               Top Clip(m): 0.000
      Weir Discharge Coef: 2.650
    Orifice Discharge Coef: 0.850


        Name: weir30              From Node: xs30
       Group: BASE                  To Node: xs20
        Flow: Both                    Count: 1
        Type: Vertical: Gravel     Geometry: Irregular

                       XSec: weir30
                  Invert(m): 19.000
      Control Elevation(m): 19.000
     Struct Opening Dim(m): 3047.70
                                             TABLE
            Bottom Clip(m): 0.000
               Top Clip(m): 0.000
      Weir Discharge Coef: 2.650
    Orifice Discharge Coef: 0.850


        Name: weir40-1            From Node: xs40
       Group: BASE                  To Node: xs100
        Flow: Both                    Count: 1
        Type: Vertical: Gravel     Geometry: Irregular

                       XSec: weir40-1
                  Invert(m): 22.000
      Control Elevation(m): 22.000
     Struct Opening Dim(m): 3047.70
```

```
                                        TABLE
          Bottom Clip(m): 0.000
             Top Clip(m): 0.000
     Weir Discharge Coef: 2.650
  Orifice Discharge Coef: 0.850


-----------------------------------------------------------------------------------------------
      Name: weir40-2              From Node: xs40
     Group: BASE                    To Node: xs2
      Flow: Both                      Count: 1
      Type: Vertical: Gravel      Geometry: Irregular

                   XSec: weir40-2
             Invert(m): 22.000
   Control Elevation(m): 22.000
  Struct Opening Dim(m): 3047.70
                                        TABLE
          Bottom Clip(m): 0.000
             Top Clip(m): 0.000
     Weir Discharge Coef: 2.650
  Orifice Discharge Coef: 0.850


-----------------------------------------------------------------------------------------------
      Name: weir50                From Node: xs50
     Group: BASE                    To Node: xs4
      Flow: Both                      Count: 1
      Type: Vertical: Gravel      Geometry: Irregular

                   XSec: weir50
             Invert(m): 24.000
   Control Elevation(m): 24.000
  Struct Opening Dim(m): 3047.70
                                        TABLE
          Bottom Clip(m): 0.000
             Top Clip(m): 0.000
     Weir Discharge Coef: 2.650
  Orifice Discharge Coef: 0.850


-----------------------------------------------------------------------------------------------
      Name: weir60                From Node: xs60
     Group: BASE                    To Node: xs6
      Flow: Both                      Count: 1
      Type: Vertical: Gravel      Geometry: Irregular

                   XSec: weir60
             Invert(m): 27.000
   Control Elevation(m): 27.000
  Struct Opening Dim(m): 3047.70
                                        TABLE
          Bottom Clip(m): 0.000
             Top Clip(m): 0.000
     Weir Discharge Coef: 2.650
  Orifice Discharge Coef: 0.850


-----------------------------------------------------------------------------------------------
```

```
        Name: weir70              From Node: xs70
       Group: BASE                  To Node: xs7
        Flow: Both                    Count: 1
        Type: Vertical: Gravel     Geometry: Irregular

                       XSec: weir70
                 Invert(m): 29.000
       Control Elevation(m): 29.000
      Struct Opening Dim(m): 3047.70
                                          TABLE
             Bottom Clip(m): 0.000
                Top Clip(m): 0.000
        Weir Discharge Coef: 2.650
      Orifice Discharge Coef: 0.850


        Name: weir75              From Node: xs75
       Group: BASE                  To Node: xs8
        Flow: Both                    Count: 1
        Type: Vertical: Gravel     Geometry: Irregular

                       XSec: weir75
                 Invert(m): 31.000
       Control Elevation(m): 31.000
      Struct Opening Dim(m): 3047.70
                                          TABLE
             Bottom Clip(m): 0.000
                Top Clip(m): 0.000
        Weir Discharge Coef: 2.650
      Orifice Discharge Coef: 0.850


        Name: weirroad2           From Node: xs20
       Group: BASE                  To Node: xs15
        Flow: Both                    Count: 1
        Type: Vertical: Paved      Geometry: Irregular

                       XSec: weirroad2
                 Invert(m): 16.980
       Control Elevation(m): 16.980
      Struct Opening Dim(m): 3047.70
                                          TABLE
             Bottom Clip(m): 0.000
                Top Clip(m): 0.000
        Weir Discharge Coef: 2.650
      Orifice Discharge Coef: 0.850


==========================================================================
==== Bridges ============================================================
==========================================================================


==========================================================================
==== Breaches ===========================================================
==========================================================================
```

```
==========================================================================================
==== Rating Curves =======================================================================
==========================================================================================


==========================================================================================
==== Hydrology Simulations ===============================================================
==========================================================================================

         Name: 100yr24hreso
     Filename: H:\Guayama\Guayama SMU\ICPR3\100yr24hreso.R32

      Override Defaults: No

Time(hrs)       Print Inc(min)
--------------- ---------------
24.000          5.00

------------------------------------------------------------------------------------------
         Name: 2yr24hreso
     Filename: H:\Guayama\Guayama SMU\ICPR3\2yr24hreso.R32

      Override Defaults: Yes
    Storm Duration(hrs): 24.00
          Rainfall File: Scsii-24
    Rainfall Amount(cm): 12.45

Time(hrs)       Print Inc(min)
--------------- ---------------
24.000          5.00

==========================================================================================
==== Routing Simulations =================================================================
==========================================================================================

         Name: 100yr24hreso        Hydrology Sim: 100yr24hreso
     Filename: H:\Guayama\Guayama SMU\ICPR3\100yr24hreso.I32

      Execute: Yes         Restart: No            Patch: No
  Alternative: No

        Max Delta Z(m): 0.50                      Delta Z Factor: 0.00500
    Time Step Optimizer: 0.000
       Start Time(hrs): 0.000                      End Time(hrs): 24.00
     Min Calc Time(sec): 10.0000              Max Calc Time(sec): 60.0000
        Boundary Stages:                          Boundary Flows:


Time(hrs)       Print Inc(min)
--------------- ---------------
24.000          5.000

Group           Run
--------------- -----
BASE            Yes


------------------------------------------------------------------------------------------
         Name: 2yr24hreso          Hydrology Sim: 2yr24hreso
     Filename: H:\Guayama\Guayama SMU\ICPR3\2yr24hreso.I32

      Execute: Yes         Restart: No            Patch: No
```

Alternative: No

Max Delta Z(m):	0.50	Delta Z Factor:	0.00500
Time Step Optimizer:	0.000		
Start Time(hrs):	0.000	End Time(hrs):	24.00
Min Calc Time(sec):	10.0000	Max Calc Time(sec):	60.0000
Boundary Stages:		Boundary Flows:	

Time(hrs)	Print Inc(min)
24.000	5.000

Group	Run
BASE	Yes

APPENDIX B:

adICPR Hydrologic-Hydraulic Input and Output Files for Proposed Condition

==== Basins ====

```
Name: BasinEast                    Node: xs310                    Status: Onsite
Group: BASE                        Type: SCS Unit Hydrograph

Unit Hydrograph: Uh484                   Peaking Factor: 484.0
Rainfall File: Scsii-24            Storm Duration(hrs): 24.00
Rainfall Amount(cm): 30.480          Time of Conc(min): 33.00
Area(ha): 49.400                       Time Shift(hrs): 0.00
Curve Number: 80.00              Max Allowable Q(cms): 28316.822
DCIA(%): 0.00
```

```
Name: MalaniaLake                  Node: lake                     Status: Onsite
Group: BASE                        Type: SCS Unit Hydrograph

Unit Hydrograph: Uh484                   Peaking Factor: 484.0
Rainfall File: Scsii-24            Storm Duration(hrs): 24.00
Rainfall Amount(cm): 30.480          Time of Conc(min): 47.00
Area(ha): 243.700                      Time Shift(hrs): 0.00
Curve Number: 79.00              Max Allowable Q(cms): 28316.822
DCIA(%): 0.00
```

```
Name: MelaniaCreek                 Node: xs8                      Status: Onsite
Group: BASE                        Type: SCS Unit Hydrograph

Unit Hydrograph: Uh484                   Peaking Factor: 484.0
Rainfall File: Scsii-24            Storm Duration(hrs): 24.00
Rainfall Amount(cm): 30.480          Time of Conc(min): 48.00
Area(ha): 167.500                      Time Shift(hrs): 0.00
Curve Number: 80.00              Max Allowable Q(cms): 28316.822
DCIA(%): 0.00
```

```
Name: Site1                        Node: StageArea                Status: Onsite
Group: BASE                        Type: SCS Unit Hydrograph

Unit Hydrograph: Uh484                   Peaking Factor: 484.0
Rainfall File: Scsii-24            Storm Duration(hrs): 24.00
Rainfall Amount(cm): 30.480          Time of Conc(min): 8.00
Area(ha): 17.900                       Time Shift(hrs): 0.00
Curve Number: 92.00              Max Allowable Q(cms): 28316.822
DCIA(%): 0.00
```

```
Name: Site2a                       Node: u/scrossing1             Status: Onsite
Group: BASE                        Type: SCS Unit Hydrograph

Unit Hydrograph: Uh484                   Peaking Factor: 484.0
Rainfall File: Scsii-24            Storm Duration(hrs): 24.00
Rainfall Amount(cm): 30.480          Time of Conc(min): 8.00
```

```
            Area(ha): 7.990                    Time Shift(hrs): 0.00
        Curve Number: 92.00                 Max Allowable Q(cms): 28316.822
             DCIA(%): 0.00


-----------------------------------------------------------------------------------------------
        Name: Site2b                    Node: u/sch2b                    Status: Onsite
       Group: BASE                      Type: SCS Unit Hydrograph

      Unit Hydrograph: Uh484                     Peaking Factor: 484.0
        Rainfall File: Scsii-24             Storm Duration(hrs): 24.00
  Rainfall Amount(cm): 30.480                 Time of Conc(min): 5.00
            Area(ha): 4.500                     Time Shift(hrs): 0.00
        Curve Number: 92.00                 Max Allowable Q(cms): 28316.822
             DCIA(%): 0.00


-----------------------------------------------------------------------------------------------
        Name: Site3                     Node: xs40                       Status: Onsite
       Group: BASE                      Type: SCS Unit Hydrograph

      Unit Hydrograph: Uh484                     Peaking Factor: 484.0
        Rainfall File: Scsii-24             Storm Duration(hrs): 24.00
  Rainfall Amount(cm): 30.480                 Time of Conc(min): 9.00
            Area(ha): 20.300                    Time Shift(hrs): 0.00
        Curve Number: 92.00                 Max Allowable Q(cms): 28316.822
             DCIA(%): 0.00


-----------------------------------------------------------------------------------------------
        Name: Site4                     Node: xs75                       Status: Onsite
       Group: BASE                      Type: SCS Unit Hydrograph

      Unit Hydrograph: Uh484                     Peaking Factor: 484.0
        Rainfall File: Scsii-24             Storm Duration(hrs): 24.00
  Rainfall Amount(cm): 30.480                 Time of Conc(min): 10.00
            Area(ha): 41.270                    Time Shift(hrs): 0.00
        Curve Number: 77.00                 Max Allowable Q(cms): 28316.822
             DCIA(%): 0.00


===============================================================================================
==== Nodes ====================================================================================
===============================================================================================

       Name: bndry1              Base Flow(cms): 0.000          Init Stage(m): 18.000
      Group: BASE                                              Warn Stage(m): 0.000
       Type: Time/Stage


      Time(hrs)        Stage(m)
--------------- ---------------
           0.00          18.000
          24.00          18.000

-----------------------------------------------------------------------------------------------
       Name: bndry2              Base Flow(cms): 0.000          Init Stage(m): 14.710
      Group: BASE                                              Warn Stage(m): 0.000
```

Type: Time/Stage

Time(hrs)	Stage(m)
0.00	14.710
24.00	14.710

Name: lake Base Flow(cms): 0.000 Init Stage(m): 40.000
Group: BASE Warn Stage(m): 0.000
Type: Stage/Area

Stage(m)	Area(ha)
40.000	9.1900
42.000	9.1900
42.800	9.1900

Name: mhp36 Base Flow(cms): 0.000 Init Stage(m): 14.700
Group: BASE Warn Stage(m): 0.000
Type: Stage/Area

Stage(m)	Area(ha)

Name: mhp42A Base Flow(cms): 0.000 Init Stage(m): 14.700
Group: BASE Warn Stage(m): 0.000
Type: Stage/Area

Stage(m)	Area(ha)

Name: mhp60 Base Flow(cms): 0.000 Init Stage(m): 14.700
Group: BASE Warn Stage(m): 0.000
Type: Stage/Area

Stage(m)	Area(ha)

Name: mhpNew1 Base Flow(cms): 0.000 Init Stage(m): 14.700
Group: BASE Warn Stage(m): 0.000
Type: Stage/Area

Stage(m)	Area(ha)

```
Name: mhpNew2          Base Flow(cms): 0.000          Init Stage(m): 14.700
Group: BASE                                           Warn Stage(m): 0.000
Type: Stage/Area

Stage(m)        Area(ha)
--------------- ---------------

Name: mhpNew3          Base Flow(cms): 0.000          Init Stage(m): 14.700
Group: BASE                                           Warn Stage(m): 0.000
Type: Stage/Area

Stage(m)        Area(ha)
--------------- ---------------

Name: StageArea        Base Flow(cms): 0.000          Init Stage(m): 14.700
Group: BASE                                           Warn Stage(m): 0.000
Type: Stage/Area

Stage(m)        Area(ha)
--------------- ---------------
     14.700          3.9700
     18.500          6.2100

Name: u/sch2b          Base Flow(cms): 0.000          Init Stage(m): 28.500
Group: BASE                                           Warn Stage(m): 0.000
Type: Stage/Area

Stage(m)        Area(ha)
--------------- ---------------

Name: u/scrossing1     Base Flow(cms): 0.000          Init Stage(m): 21.000
Group: BASE                                           Warn Stage(m): 0.000
Type: Stage/Area

Stage(m)        Area(ha)
--------------- ---------------

Name: u/scrossing2     Base Flow(cms): 0.000          Init Stage(m): 24.000
Group: BASE                                           Warn Stage(m): 0.000
Type: Stage/Area

Stage(m)        Area(ha)
--------------- ---------------

Name: xs1              Base Flow(cms): 0.000          Init Stage(m): 18.000
```

```
     Group: BASE                                                    Warn Stage(m): 0.000
      Type: Stage/Area


       Stage(m)        Area(ha)
--------------- ---------------

-------------------------------------------------------------------------------------------
      Name: xs15                Base Flow(cms): 0.000              Init Stage(m): 14.710
     Group: BASE                                                   Warn Stage(m): 0.000
      Type: Stage/Area


       Stage(m)        Area(ha)
--------------- ---------------

-------------------------------------------------------------------------------------------
      Name: xs2                 Base Flow(cms): 0.000              Init Stage(m): 18.340
     Group: BASE                                                   Warn Stage(m): 0.000
      Type: Stage/Area


       Stage(m)        Area(ha)
--------------- ---------------

-------------------------------------------------------------------------------------------
      Name: xs3                 Base Flow(cms): 0.000              Init Stage(m): 20.000
     Group: BASE                                                   Warn Stage(m): 0.000
      Type: Stage/Area


       Stage(m)        Area(ha)
--------------- ---------------

-------------------------------------------------------------------------------------------
      Name: xs30                Base Flow(cms): 0.000              Init Stage(m): 18.500
     Group: BASE                                                   Warn Stage(m): 0.000
      Type: Stage/Area


       Stage(m)        Area(ha)
--------------- ---------------

-------------------------------------------------------------------------------------------
      Name: xs300               Base Flow(cms): 0.000              Init Stage(m): 19.200
     Group: BASE                                                   Warn Stage(m): 0.000
      Type: Stage/Area


       Stage(m)        Area(ha)
--------------- ---------------

-------------------------------------------------------------------------------------------
      Name: xs310               Base Flow(cms): 0.000              Init Stage(m): 21.000
     Group: BASE                                                   Warn Stage(m): 0.000
      Type: Stage/Area
```

```
      Stage(m)        Area(ha)
--------------- ---------------

-----------------------------------------------------------------------------------------
     Name: xs4                 Base Flow(cms): 0.000          Init Stage(m): 21.000
    Group: BASE                                              Warn Stage(m): 0.000
     Type: Stage/Area


      Stage(m)        Area(ha)
--------------- ---------------

-----------------------------------------------------------------------------------------
     Name: xs40                Base Flow(cms): 0.000          Init Stage(m): 21.000
    Group: BASE                                              Warn Stage(m): 0.000
     Type: Stage/Area


      Stage(m)        Area(ha)
--------------- ---------------

-----------------------------------------------------------------------------------------
     Name: xs5                 Base Flow(cms): 0.000          Init Stage(m): 21.000
    Group: BASE                                              Warn Stage(m): 0.000
     Type: Stage/Area


      Stage(m)        Area(ha)
--------------- ---------------

-----------------------------------------------------------------------------------------
     Name: xs50                Base Flow(cms): 0.000          Init Stage(m): 24.000
    Group: BASE                                              Warn Stage(m): 0.000
     Type: Stage/Area


      Stage(m)        Area(ha)
--------------- ---------------

-----------------------------------------------------------------------------------------
     Name: xs6                 Base Flow(cms): 0.000          Init Stage(m): 22.000
    Group: BASE                                              Warn Stage(m): 0.000
     Type: Stage/Area


      Stage(m)        Area(ha)
--------------- ---------------

-----------------------------------------------------------------------------------------
     Name: xs60                Base Flow(cms): 0.000          Init Stage(m): 27.000
    Group: BASE                                              Warn Stage(m): 0.000
     Type: Stage/Area


      Stage(m)        Area(ha)
```

```
--------------- ---------------

-----------------------------------------------------------------------------------------
      Name: xs7                 Base Flow(cms): 0.000           Init Stage(m): 23.380
     Group: BASE                                               Warn Stage(m): 0.000
      Type: Stage/Area


       Stage(m)        Area(ha)
--------------- ---------------

-----------------------------------------------------------------------------------------
      Name: xs70                Base Flow(cms): 0.000           Init Stage(m): 29.000
     Group: BASE                                               Warn Stage(m): 0.000
      Type: Stage/Area


       Stage(m)        Area(ha)
--------------- ---------------

-----------------------------------------------------------------------------------------
      Name: xs75                Base Flow(cms): 0.000           Init Stage(m): 31.000
     Group: BASE                                               Warn Stage(m): 0.000
      Type: Stage/Area


       Stage(m)        Area(ha)
--------------- ---------------

-----------------------------------------------------------------------------------------
      Name: xs8                 Base Flow(cms): 0.000           Init Stage(m): 25.000
     Group: BASE                                               Warn Stage(m): 0.000
      Type: Stage/Area


       Stage(m)        Area(ha)
--------------- ---------------

=========================================================================================
==== Cross Sections ======================================================================
=========================================================================================

              Name: weir2                        Group: BASE
      Encroachment: No


     Station(m)    Elevation(m)     Manning's N
--------------- --------------- ---------------
          0.000          19.000        0.040000
         61.500          18.500        0.040000

-----------------------------------------------------------------------
              Name: weir30                       Group: BASE
      Encroachment: No


     Station(m)    Elevation(m)     Manning's N
```

0.000	20.000	0.040000
58.700	19.000	0.040000
81.700	18.500	0.040000

Name: weir40 Group: BASE
Encroachment: No

Station(m)	Elevation(m)	Manning's N
0.000	22.000	0.040000
67.900	21.000	0.040000

Name: weir40-1 Group: BASE
Encroachment: No

Station(m)	Elevation(m)	Manning's N
0.000	17.000	0.040000
37.000	19.000	0.040000
56.600	20.000	0.040000
221.600	22.000	0.040000

Name: weir40-2 Group: BASE
Encroachment: No

Station(m)	Elevation(m)	Manning's N
0.000	21.000	0.040000
96.000	18.500	0.040000

Name: weir50 Group: BASE
Encroachment: No

Station(m)	Elevation(m)	Manning's N
0.000	23.000	0.040000
122.500	24.000	0.040000

Name: weir60 Group: BASE
Encroachment: No

Station(m)	Elevation(m)	Manning's N
0.000	27.000	0.040000
31.500	26.000	0.040000

Name: weir70 Group: BASE
Encroachment: No

Station(m)	Elevation(m)	Manning's N
0.000	28.000	0.040000
101.000	29.000	0.040000

Name: weir75 Group: BASE
Encroachment: No

Station(m)	Elevation(m)	Manning's N
0.000	31.000	0.040000
55.000	30.000	0.040000

Name: weirroad1 Group: BASE
Encroachment: No

Station(m)	Elevation(m)	Manning's N
-80.200	22.260	0.012000
-62.000	22.090	0.012000
-41.700	21.830	0.012000
-22.000	21.680	0.012000
0.000	21.760	0.012000
8.800	21.800	0.012000
19.500	21.960	0.012000
38.000	22.300	0.012000
59.000	22.810	0.012000
79.200	23.400	0.012000

Name: weirroad2 Group: BASE
Encroachment: No

Station(m)	Elevation(m)	Manning's N
0.000	16.980	0.012000
13.600	16.960	0.012000
20.300	17.170	0.012000
24.700	17.230	0.012000
35.900	17.140	0.012000
45.970	17.220	0.012000
60.100	17.300	0.012000
73.700	17.360	0.012000
80.900	17.400	0.012000
92.700	17.590	0.012000
94.160	17.630	0.012000
105.200	17.700	0.012000
126.200	17.900	0.012000
142.400	18.040	0.012000
161.000	18.170	0.012000

182.600	18.200	0.012000
203.400	18.360	0.012000
223.200	18.580	0.012000
240.900	18.860	0.012000
255.400	18.960	0.012000
275.200	19.140	0.012000
295.100	19.320	0.012000
315.700	19.510	0.012000
335.800	19.780	0.012000
354.900	19.960	0.012000
369.000	20.100	0.012000

Name: xs1 Group: BASE
Encroachment: No

Station(m)	Elevation(m)	Manning's N
0.000	18.720	0.040000
16.100	18.900	0.040000
27.200	17.870	0.040000
49.600	20.200	0.040000
76.000	21.130	0.040000
91.400	20.220	0.040000
112.200	20.080	0.040000
120.000	20.900	0.040000
127.400	21.400	0.040000
140.000	18.170	0.040000
152.800	21.490	0.040000
160.500	21.650	0.040000

Name: xs100 Group: BASE
Encroachment: No

Station(m)	Elevation(m)	Manning's N
0.000	17.000	0.040000
40.000	17.000	0.040000
154.800	17.000	0.040000

Name: xs15 Group: BASE
Encroachment: No

Station(m)	Elevation(m)	Manning's N
0.000	16.530	0.040000
10.300	14.710	0.040000
19.000	16.710	0.040000
38.400	15.000	0.040000
50.400	16.470	0.040000
61.600	14.920	0.040000
81.700	16.510	0.040000
96.900	17.460	0.040000
128.500	17.070	0.040000
142.500	17.240	0.040000

168.900	17.400	0.040000
184.700	17.060	0.040000
214.000	16.910	0.040000
240.300	15.180	0.040000
273.200	18.000	0.040000
290.000	18.230	0.040000
305.100	18.070	0.040000
335.000	17.600	0.040000
350.800	17.500	0.040000
380.600	17.600	0.040000

Name: xs2 Group: BASE
Encroachment: No

Station(m)	Elevation(m)	Manning's N
-117.000	18.500	0.040000
-93.800	19.000	0.040000
-74.800	19.500	0.040000
-63.800	18.740	0.040000
-56.000	19.500	0.040000
-36.000	19.000	0.040000
0.000	19.000	0.040000
18.300	19.500	0.040000
21.900	18.500	0.040000
23.400	18.340	0.040000
24.500	18.500	0.040000
25.400	19.500	0.040000
26.900	20.000	0.040000
33.300	21.000	0.040000
41.400	22.000	0.040000

Name: xs20 Group: BASE
Encroachment: No

Station(m)	Elevation(m)	Manning's N
0.000	16.000	0.040000
189.400	16.000	0.040000
401.000	16.000	0.040000
501.800	17.000	0.040000
517.900	18.000	0.040000
521.800	18.500	0.040000
525.000	19.000	0.040000
529.600	19.500	0.040000
536.500	19.500	0.040000
540.900	19.000	0.040000
543.000	18.500	0.040000
545.800	18.000	0.040000
578.800	18.000	0.040000
624.400	18.000	0.040000

Name: xs200 Group: BASE
Encroachment: No

Station(m)	Elevation(m)	Manning's N
0.000	19.000	0.040000
88.000	20.000	0.040000
167.000	21.000	0.040000

Name: xs250 Group: BASE
Encroachment: No

Station(m)	Elevation(m)	Manning's N
-96.000	20.000	0.040000
0.000	19.000	0.040000
51.000	20.000	0.040000
85.300	21.000	0.040000
156.800	22.000	0.040000

Name: xs3 Group: BASE
Encroachment: No

Station(m)	Elevation(m)	Manning's N
0.000	22.000	0.040000
52.200	21.000	0.040000
131.800	20.000	0.040000
140.900	20.000	0.040000
155.500	21.000	0.040000
158.400	22.000	0.040000
161.200	23.000	0.040000

Name: xs30 Group: BASE
Encroachment: No

Station(m)	Elevation(m)	Manning's N
476.000	21.000	0.040000
476.100	18.500	0.040000
552.800	19.000	0.040000
587.200	19.000	0.040000
676.100	20.000	0.040000

Name: xs300 Group: BASE
Encroachment: No

Station(m)	Elevation(m)	Manning's N
-0.100	24.000	0.040000
0.000	21.000	0.040000
60.000	20.000	0.040000
86.000	21.000	0.040000

109.200	22.000	0.040000
123.400	23.000	0.040000
128.100	24.000	0.040000
136.200	26.000	0.040000
140.800	27.000	0.040000
144.900	28.000	0.040000

Name: xs30b Group: BASE
Encroachment: No

Station(m)	Elevation(m)	Manning's N
-10.000	19.500	0.040000
0.000	19.500	0.040000
46.000	18.500	0.040000
66.000	18.000	0.040000
70.000	18.500	0.040000
74.000	19.000	0.040000
78.000	19.500	0.040000

Name: xs4 Group: BASE
Encroachment: No

Station(m)	Elevation(m)	Manning's N
0.000	23.000	0.040000
75.700	22.000	0.040000
171.300	21.000	0.040000
184.300	21.000	0.040000
257.500	22.000	0.040000
271.700	23.000	0.040000
284.400	24.000	0.040000

Name: xs40 Group: BASE
Encroachment: No

Station(m)	Elevation(m)	Manning's N
497.000	24.000	0.040000
497.100	21.000	0.040000
607.900	21.000	0.040000
680.700	21.000	0.040000
814.300	22.000	0.040000

Name: xs5 Group: BASE
Encroachment: No

Station(m)	Elevation(m)	Manning's N
0.000	25.000	0.040000
118.400	24.000	0.040000

165.900	23.000	0.040000
223.100	22.000	0.040000
224.700	21.000	0.040000
227.300	21.000	0.040000
234.500	22.000	0.040000
297.500	23.000	0.040000
316.600	24.000	0.040000
356.000	25.000	0.040000
403.000	26.000	0.040000

Name: xs50 Group: BASE
Encroachment: No

Station(m)	Elevation(m)	Manning's N
0.000	35.000	0.040000
13.800	33.000	0.040000
39.100	31.000	0.040000
58.700	30.000	0.040000
86.700	27.500	0.040000
90.100	27.490	0.040000
101.200	28.000	0.040000
124.480	27.000	0.040000
155.400	26.000	0.040000
226.400	25.000	0.040000
391.200	24.000	0.040000

Name: xs6 Group: BASE
Encroachment: No

Station(m)	Elevation(m)	Manning's N
0.000	27.000	0.040000
99.000	26.000	0.040000
164.100	25.000	0.040000
250.700	24.000	0.040000
281.400	22.000	0.040000
288.000	24.000	0.040000
291.400	25.000	0.040000
295.000	26.000	0.040000
306.600	27.000	0.040000
327.700	27.000	0.040000
405.900	27.000	0.040000
441.600	28.000	0.040000

Name: xs60 Group: BASE
Encroachment: No

Station(m)	Elevation(m)	Manning's N
0.000	35.000	0.040000
34.800	32.000	0.040000
66.400	30.000	0.040000
80.330	29.000	0.040000

126.400	27.420	0.040000
130.600	27.420	0.040000
177.100	28.000	0.040000
338.200	27.000	0.040000

Name: xs7 Group: BASE
Encroachment: No

Station(m)	Elevation(m)	Manning's N
0.000	27.420	0.040000
52.800	28.000	0.040000
101.700	27.000	0.040000
116.200	26.000	0.040000
130.600	25.000	0.040000
174.400	24.000	0.040000
177.400	23.380	0.040000
181.100	24.000	0.040000
187.300	25.000	0.040000
189.600	26.000	0.040000
191.100	27.000	0.040000
224.800	28.000	0.040000
268.200	28.000	0.040000

Name: xs70 Group: BASE
Encroachment: No

Station(m)	Elevation(m)	Manning's N
0.000	35.000	0.040000
30.500	31.000	0.040000
108.700	30.000	0.040000
325.700	29.000	0.040000

Name: xs8 Group: BASE
Encroachment: No

Station(m)	Elevation(m)	Manning's N
0.000	29.040	0.040000
52.800	29.620	0.040000
101.700	28.620	0.040000
116.200	27.620	0.040000
130.600	26.620	0.040000
174.400	25.620	0.040000
177.400	25.000	0.040000
181.100	25.620	0.040000
187.300	26.620	0.040000
189.600	27.620	0.040000
191.100	28.620	0.040000
224.800	29.620	0.040000
268.200	29.620	0.040000

==== Operating Tables ==========

Name: Group: BASE
Type: Bottom Clip
Function: Time vs. Depth of Clip

Time(hrs)	Clip Depth(cm)

==== Pipes ==========

Name: Crossing1 From Node: u/scrossing1 Length(m): 68.00
Group: BASE To Node: xs30 Count: 2
Friction Equation: Average Conveyance
Solution Algorithm: Automatic
Flow: Both
Entrance Loss Coef: 0.50
Exit Loss Coef: 1.00
Bend Loss Coef: 0.00
Outlet Ctrl Spec: Use dc or tw
Inlet Ctrl Spec: Use dn
Stabilizer Option: None

	UPSTREAM	DOWNSTREAM
Geometry:	Rectangular	Rectangular
Span(cm):	152.40	152.40
Rise(cm):	152.40	152.40
Invert(m):	21.000	19.500
Manning's N:	0.013000	0.013000
Top Clip(cm):	0.000	0.000
Bot Clip(cm):	0.000	0.000

Upstream FHWA Inlet Edge Description:
Rectangular Box: 30° to 75° wingwall flares

Downstream FHWA Inlet Edge Description:
Rectangular Box: 30° to 75° wingwall flares

Name: Crossing2 From Node: u/scrossing2 Length(m): 47.00
Group: BASE To Node: xs40 Count: 1
Friction Equation: Average Conveyance
Solution Algorithm: Automatic
Flow: Both
Entrance Loss Coef: 0.50
Exit Loss Coef: 1.00
Bend Loss Coef: 0.00
Outlet Ctrl Spec: Use dc or tw
Inlet Ctrl Spec: Use dn
Stabilizer Option: None

	UPSTREAM	DOWNSTREAM
Geometry:	Rectangular	Rectangular
Span(cm):	152.40	152.40
Rise(cm):	152.40	152.40
Invert(m):	24.000	23.000
Manning's N:	0.013000	0.013000
Top Clip(cm):	0.000	0.000
Bot Clip(cm):	0.000	0.000

Upstream FHWA Inlet Edge Description:
Rectangular Box: 30° to 75° wingwall flares

Downstream FHWA Inlet Edge Description:
Rectangular Box: 30° to 75° wingwall flares

Name: pipe36 From Node: mhp36 Length(m): 40.00

Group:	BASE	To Node: xs15	Count:	6
			Friction Equation:	Average Conveyance
	UPSTREAM	DOWNSTREAM	Solution Algorithm:	Automatic
Geometry:	Circular	Circular	Flow:	Both
Span(cm):	91.44	91.44	Entrance Loss Coef:	0.50
Rise(cm):	91.44	91.44	Exit Loss Coef:	1.00
Invert(m):	15.190	15.180	Bend Loss Coef:	0.00
Manning's N:	0.013000	0.013000	Outlet Ctrl Spec:	Use dc or tw
Top Clip(cm):	0.000	0.000	Inlet Ctrl Spec:	Use dn
Bot Clip(cm):	0.000	0.000	Stabilizer Option:	None

Upstream FHWA Inlet Edge Description:
Circular Concrete: Square edge w/ headwall

Downstream FHWA Inlet Edge Description:
Circular Concrete: Square edge w/ headwall

Name:	pipe42A	From Node: mhp42A	Length(m):	50.00
Group:	BASE	To Node: xs15	Count:	4
			Friction Equation:	Average Conveyance
	UPSTREAM	DOWNSTREAM	Solution Algorithm:	Automatic
Geometry:	Circular	Circular	Flow:	Both
Span(cm):	106.68	106.68	Entrance Loss Coef:	0.50
Rise(cm):	106.68	106.68	Exit Loss Coef:	1.00
Invert(m):	15.090	14.920	Bend Loss Coef:	0.00
Manning's N:	0.013000	0.013000	Outlet Ctrl Spec:	Use dc or tw
Top Clip(cm):	0.000	0.000	Inlet Ctrl Spec:	Use dn
Bot Clip(cm):	0.000	0.000	Stabilizer Option:	None

Upstream FHWA Inlet Edge Description:
Circular Concrete: Square edge w/ headwall

Downstream FHWA Inlet Edge Description:
Circular Concrete: Square edge w/ headwall

Name:	pipe42B	From Node: StageArea	Length(m):	37.00
Group:	BASE	To Node: xs15	Count:	4
			Friction Equation:	Average Conveyance
	UPSTREAM	DOWNSTREAM	Solution Algorithm:	Automatic
Geometry:	Circular	Circular	Flow:	Both
Span(cm):	106.68	106.68	Entrance Loss Coef:	0.50
Rise(cm):	106.68	106.68	Exit Loss Coef:	1.00
Invert(m):	15.075	14.710	Bend Loss Coef:	0.00
Manning's N:	0.013000	0.013000	Outlet Ctrl Spec:	Use dc or tw
Top Clip(cm):	0.000	0.000	Inlet Ctrl Spec:	Use dn
Bot Clip(cm):	0.000	0.000	Stabilizer Option:	None

Upstream FHWA Inlet Edge Description:
Circular Concrete: Square edge w/ headwall

Downstream FHWA Inlet Edge Description:

Circular Concrete: Square edge w/ headwall

Name:	pipe60	From Node: mhp60	Length(m):	38.30
Group:	BASE	To Node: xs15	Count:	4
			Friction Equation:	Average Conveyance
	UPSTREAM	DOWNSTREAM	Solution Algorithm:	Automatic
Geometry:	Circular	Circular	Flow:	Both
Span(cm):	152.40	152.40	Entrance Loss Coef:	0.50
Rise(cm):	152.40	152.40	Exit Loss Coef:	1.00
Invert(m):	15.520	15.000	Bend Loss Coef:	0.00
Manning's N:	0.013000	0.013000	Outlet Ctrl Spec:	Use dc or tw
Top Clip(cm):	0.000	0.000	Inlet Ctrl Spec:	Use dn
Bot Clip(cm):	0.000	0.000	Stabilizer Option:	None

Upstream FHWA Inlet Edge Description:
Circular Concrete: Square edge w/ headwall

Downstream FHWA Inlet Edge Description:
Circular Concrete: Square edge w/ headwall

Name:	pipecreek	From Node: xs2	Length(m):	20.30
Group:	BASE	To Node: xs1	Count:	4
			Friction Equation:	Average Conveyance
	UPSTREAM	DOWNSTREAM	Solution Algorithm:	Automatic
Geometry:	Circular	Circular	Flow:	Both
Span(cm):	152.40	152.40	Entrance Loss Coef:	0.50
Rise(cm):	152.40	152.40	Exit Loss Coef:	1.00
Invert(m):	18.340	18.170	Bend Loss Coef:	0.00
Manning's N:	0.013000	0.013000	Outlet Ctrl Spec:	Use dc or tw
Top Clip(cm):	0.000	0.000	Inlet Ctrl Spec:	Use dn
Bot Clip(cm):	0.000	0.000	Stabilizer Option:	None

Upstream FHWA Inlet Edge Description:
Circular Concrete: Square edge w/ headwall

Downstream FHWA Inlet Edge Description:
Circular Concrete: Square edge w/ headwall

Name:	pipenew1	From Node: mhpNew1	Length(m):	40.00
Group:	BASE	To Node: xs15	Count:	4
			Friction Equation:	Average Conveyance
	UPSTREAM	DOWNSTREAM	Solution Algorithm:	Automatic
Geometry:	Rectangular	Rectangular	Flow:	Both
Span(cm):	152.40	152.40	Entrance Loss Coef:	0.50
Rise(cm):	152.40	152.40	Exit Loss Coef:	1.00
Invert(m):	15.190	15.180	Bend Loss Coef:	0.00
Manning's N:	0.013000	0.013000	Outlet Ctrl Spec:	Use dc or tw
Top Clip(cm):	0.000	0.000	Inlet Ctrl Spec:	Use dn
Bot Clip(cm):	0.000	0.000	Stabilizer Option:	None

Upstream FHWA Inlet Edge Description:
Rectangular Box: 30° to 75° wingwall flares

Downstream FHWA Inlet Edge Description:
Rectangular Box: 30° to 75° wingwall flares

```
        Name: pipenew2            From Node: mhpNew2            Length(m): 40.00
       Group: BASE                  To Node: xs15                 Count: 4
                                                        Friction Equation: Average Conveyance
              UPSTREAM       DOWNSTREAM                 Solution Algorithm: Automatic
    Geometry: Rectangular    Rectangular                           Flow: Both
    Span(cm): 152.40         152.40                     Entrance Loss Coef: 0.50
    Rise(cm): 152.40         152.40                         Exit Loss Coef: 1.00
   Invert(m): 15.190         15.180                         Bend Loss Coef: 0.00
 Manning's N: 0.013000       0.013000                     Outlet Ctrl Spec: Use dc or tw
Top Clip(cm): 0.000          0.000                          Inlet Ctrl Spec: Use dn
Bot Clip(cm): 0.000          0.000                       Stabilizer Option: None
```

Upstream FHWA Inlet Edge Description:
Rectangular Box: 30° to 75° wingwall flares

Downstream FHWA Inlet Edge Description:
Rectangular Box: 30° to 75° wingwall flares

```
        Name: pipenew3            From Node: mhpNew3            Length(m): 40.00
       Group: BASE                  To Node: xs15                 Count: 4
                                                        Friction Equation: Average Conveyance
              UPSTREAM       DOWNSTREAM                 Solution Algorithm: Automatic
    Geometry: Rectangular    Rectangular                           Flow: Both
    Span(cm): 152.40         152.40                     Entrance Loss Coef: 0.50
    Rise(cm): 152.40         152.40                         Exit Loss Coef: 1.00
   Invert(m): 15.190         15.180                         Bend Loss Coef: 0.00
 Manning's N: 0.013000       0.013000                     Outlet Ctrl Spec: Use dc or tw
Top Clip(cm): 0.000          0.000                          Inlet Ctrl Spec: Use dn
Bot Clip(cm): 0.000          0.000                       Stabilizer Option: None
```

Upstream FHWA Inlet Edge Description:
Rectangular Box: 30° to 75° wingwall flares

Downstream FHWA Inlet Edge Description:
Rectangular Box: 30° to 75° wingwall flares

```
==================================================================================
==== Channels ====================================================================
==================================================================================

        Name: ch0                 From Node: xs1                Length(m): 35.00
       Group: BASE                  To Node: bndry1                Count: 1
```

	UPSTREAM	DOWNSTREAM
Geometry:	Irregular	Irregular
Invert(m):	18.000	18.000
TClpInitZ(m):	3047.695	3047.695
Manning's N:		
Top Clip(m):	0.000	0.000
Bot Clip(m):	0.000	0.000
Main XSec:	xs1	xs1
AuxElev1(m):	0.000	0.000
Aux XSec1:		
AuxElev2(m):	0.000	0.000
Aux XSec2:		
Top Width(m):		
Depth(m):		
Bot Width(m):		
LtSdSlp(h/v):		
RtSdSlp(h/v):		

Friction Equation:	Average Conveyance
Solution Algorithm:	Automatic
Flow:	Both
Contraction Coef:	0.100
Expansion Coef:	0.300
Entrance Loss Coef:	0.000
Exit Loss Coef:	0.000
Outlet Ctrl Spec:	Use dc or tw
Inlet Ctrl Spec:	Use dn
Stabilizer Option:	None

Name: ch10 From Node: xs15 Length(m): 35.00
Group: BASE To Node: bndry2 Count: 1

	UPSTREAM	DOWNSTREAM
Geometry:	Irregular	Irregular
Invert(m):	14.710	14.710
TClpInitZ(m):	3047.695	3047.695
Manning's N:		
Top Clip(m):	0.000	0.000
Bot Clip(m):	0.000	0.000
Main XSec:	xs15	xs15
AuxElev1(m):	0.000	0.000
Aux XSec1:		
AuxElev2(m):	0.000	0.000
Aux XSec2:		
Top Width(m):		
Depth(m):		
Bot Width(m):		
LtSdSlp(h/v):		
RtSdSlp(h/v):		

Friction Equation:	Average Conveyance
Solution Algorithm:	Automatic
Flow:	Both
Contraction Coef:	0.100
Expansion Coef:	0.300
Entrance Loss Coef:	0.000
Exit Loss Coef:	0.000
Outlet Ctrl Spec:	Use dc or tw
Inlet Ctrl Spec:	Use dn
Stabilizer Option:	None

Name: ch2 From Node: xs3 Length(m): 61.00
Group: BASE To Node: xs2 Count: 1

	UPSTREAM	DOWNSTREAM
Geometry:	Irregular	Irregular
Invert(m):	20.000	18.340
TClpInitZ(m):	3047.695	3047.695
Manning's N:		
Top Clip(m):	0.000	0.000
Bot Clip(m):	0.000	0.000
Main XSec:	xs3	xs2
AuxElev1(m):	0.000	0.000
Aux XSec1:		
AuxElev2(m):	0.000	0.000
Aux XSec2:		
Top Width(m):		
Depth(m):		
Bot Width(m):		

Friction Equation:	Average Conveyance
Solution Algorithm:	Automatic
Flow:	Both
Contraction Coef:	0.100
Expansion Coef:	0.300
Entrance Loss Coef:	0.000
Exit Loss Coef:	0.000
Outlet Ctrl Spec:	Use dc or tw
Inlet Ctrl Spec:	Use dn
Stabilizer Option:	None

```
  LtSdSlp(h/v):
  RtSdSlp(h/v):

-----------------------------------------------------------------------------------------------------
         Name: ch20                 From Node: xs30                Length(m): 137.00
        Group: BASE                   To Node: StageArea               Count: 1

                UPSTREAM        DOWNSTREAM                  Friction Equation: Average Conveyance
     Geometry: Irregular        Irregular                 Solution Algorithm: Automatic
    Invert(m): 18.500           18.500                               Flow: Both
  TClpInitZ(m): 3047.695        3047.695                   Contraction Coef: 0.100
   Manning's N:                                               Expansion Coef: 0.300
   Top Clip(m): 0.000           0.000                     Entrance Loss Coef: 0.000
   Bot Clip(m): 0.000           0.000                         Exit Loss Coef: 0.000
     Main XSec: xs30            xs30                        Outlet Ctrl Spec: Use dc or tw
   AuxElev1(m): 0.000           0.000                         Inlet Ctrl Spec: Use dn
     Aux XSec1:                                             Stabilizer Option: None
   AuxElev2(m): 0.000           0.000
     Aux XSec2:
  Top Width(m):
      Depth(m):
  Bot Width(m):
  LtSdSlp(h/v):
  RtSdSlp(h/v):

-----------------------------------------------------------------------------------------------------
         Name: ch250                From Node: xs300               Length(m): 26.00
        Group: BASE                   To Node: StageArea               Count: 1

                UPSTREAM        DOWNSTREAM                  Friction Equation: Average Conveyance
     Geometry: Irregular        Irregular                 Solution Algorithm: Automatic
    Invert(m): 20.000           18.500                               Flow: Both
  TClpInitZ(m): 3047.695        3047.695                   Contraction Coef: 0.100
   Manning's N:                                               Expansion Coef: 0.300
   Top Clip(m): 0.000           0.000                     Entrance Loss Coef: 0.000
   Bot Clip(m): 0.000           0.000                         Exit Loss Coef: 0.000
     Main XSec: xs300           xs300                       Outlet Ctrl Spec: Use dc or tw
   AuxElev1(m): 0.000           0.000                         Inlet Ctrl Spec: Use dn
     Aux XSec1:                                             Stabilizer Option: None
   AuxElev2(m): 0.000           0.000
     Aux XSec2:
  Top Width(m):
      Depth(m):
  Bot Width(m):
  LtSdSlp(h/v):
  RtSdSlp(h/v):

-----------------------------------------------------------------------------------------------------
         Name: ch2b                 From Node: u/sch2b             Length(m): 280.00
        Group: BASE                   To Node: u/scrossing2            Count: 1

                UPSTREAM        DOWNSTREAM                  Friction Equation: Average Conveyance
     Geometry: Trapezoidal      Trapezoidal               Solution Algorithm: Automatic
    Invert(m): 28.500           24.000                               Flow: Both
  TClpInitZ(m): 3047.695        3047.695                   Contraction Coef: 0.100
   Manning's N: 0.040000        0.040000                     Expansion Coef: 0.300
   Top Clip(m): 0.000           0.000                     Entrance Loss Coef: 0.000
```

Bot Clip(m):	0.000	0.000	Exit Loss Coef:	0.000
Main XSec:			Outlet Ctrl Spec:	Use dc or tw
AuxElev1(m):			Inlet Ctrl Spec:	Use dn
Aux XSec1:			Stabilizer Option:	None
AuxElev2(m):				
Aux XSec2:				
Top Width(m):				
Depth(m):				
Bot Width(m):	1.200	1.200		
LtSdSlp(h/v):	2.00	2.00		
RtSdSlp(h/v):	2.00	2.00		

Name:	ch3	From Node: xs4	Length(m):	102.00
Group:	BASE	To Node: xs3	Count:	1
	UPSTREAM	DOWNSTREAM	Friction Equation:	Average Conveyance
Geometry:	Irregular	Irregular	Solution Algorithm:	Automatic
Invert(m):	21.000	20.000	Flow:	Both
TClpInitZ(m):	3047.695	3047.695	Contraction Coef:	0.100
Manning's N:			Expansion Coef:	0.300
Top Clip(m):	0.000	0.000	Entrance Loss Coef:	0.000
Bot Clip(m):	0.000	0.000	Exit Loss Coef:	0.000
Main XSec:	xs4	xs3	Outlet Ctrl Spec:	Use dc or tw
AuxElev1(m):	0.000	0.000	Inlet Ctrl Spec:	Use dn
Aux XSec1:			Stabilizer Option:	None
AuxElev2(m):	0.000	0.000		
Aux XSec2:				
Top Width(m):				
Depth(m):				
Bot Width(m):				
LtSdSlp(h/v):				
RtSdSlp(h/v):				

Name:	ch30	From Node: xs40	Length(m):	150.00
Group:	BASE	To Node: xs30	Count:	1
	UPSTREAM	DOWNSTREAM	Friction Equation:	Average Conveyance
Geometry:	Irregular	Irregular	Solution Algorithm:	Automatic
Invert(m):	21.000	18.500	Flow:	Both
TClpInitZ(m):	3047.695	3047.695	Contraction Coef:	0.100
Manning's N:			Expansion Coef:	0.300
Top Clip(m):	0.000	0.000	Entrance Loss Coef:	0.000
Bot Clip(m):	0.000	0.000	Exit Loss Coef:	0.000
Main XSec:	xs40	xs30	Outlet Ctrl Spec:	Use dc or tw
AuxElev1(m):	0.000	0.000	Inlet Ctrl Spec:	Use dn
Aux XSec1:			Stabilizer Option:	None
AuxElev2(m):	0.000	0.000		
Aux XSec2:				
Top Width(m):				
Depth(m):				
Bot Width(m):				
LtSdSlp(h/v):				
RtSdSlp(h/v):				

```
         Name: ch300              From Node: xs310              Length(m): 100.00
        Group: BASE                 To Node: xs300                  Count: 1

                UPSTREAM       DOWNSTREAM                 Friction Equation: Average Conveyance
     Geometry: Irregular       Irregular                Solution Algorithm: Automatic
    Invert(m): 21.000          20.000                              Flow: Both
  TClpInitZ(m): 3047.695       3047.695                  Contraction Coef: 0.100
   Manning's N:                                            Expansion Coef: 0.300
   Top Clip(m): 0.000          0.000                   Entrance Loss Coef: 0.000
   Bot Clip(m): 0.000          0.000                       Exit Loss Coef: 0.000
     Main XSec: xs300          xs300                     Outlet Ctrl Spec: Use dc or tw
   AuxElev1(m): 0.000          0.000                      Inlet Ctrl Spec: Use dn
     Aux XSec1:                                          Stabilizer Option: None
   AuxElev2(m): 0.000          0.000
     Aux XSec2:
  Top Width(m):
      Depth(m):
  Bot Width(m):
  LtSdSlp(h/v):
  RtSdSlp(h/v):
```

```
         Name: ch4                From Node: xs5                Length(m): 125.00
        Group: BASE                 To Node: xs4                  Count: 1

                UPSTREAM       DOWNSTREAM                 Friction Equation: Average Conveyance
     Geometry: Irregular       Irregular                Solution Algorithm: Automatic
    Invert(m): 21.000          21.000                              Flow: Both
  TClpInitZ(m): 3047.695       3047.695                  Contraction Coef: 0.100
   Manning's N:                                            Expansion Coef: 0.300
   Top Clip(m): 0.000          0.000                   Entrance Loss Coef: 0.000
   Bot Clip(m): 0.000          0.000                       Exit Loss Coef: 0.000
     Main XSec: xs5            xs4                       Outlet Ctrl Spec: Use dc or tw
   AuxElev1(m): 0.000          0.000                      Inlet Ctrl Spec: Use dn
     Aux XSec1:                                          Stabilizer Option: None
   AuxElev2(m): 0.000          0.000
     Aux XSec2:
  Top Width(m):
      Depth(m):
  Bot Width(m):
  LtSdSlp(h/v):
  RtSdSlp(h/v):
```

```
         Name: ch40               From Node: xs50               Length(m): 230.00
        Group: BASE                 To Node: xs40                  Count: 1

                UPSTREAM       DOWNSTREAM                 Friction Equation: Average Conveyance
     Geometry: Irregular       Irregular                Solution Algorithm: Automatic
    Invert(m): 24.000          21.000                              Flow: Both
  TClpInitZ(m): 3047.695       3047.695                  Contraction Coef: 0.100
   Manning's N:                                            Expansion Coef: 0.300
   Top Clip(m): 0.000          0.000                   Entrance Loss Coef: 0.000
   Bot Clip(m): 0.000          0.000                       Exit Loss Coef: 0.000
     Main XSec: xs50           xs40                      Outlet Ctrl Spec: Use dc or tw
   AuxElev1(m): 0.000          0.000                      Inlet Ctrl Spec: Use dn
     Aux XSec1:                                          Stabilizer Option: None
   AuxElev2(m): 0.000          0.000
     Aux XSec2:
```

```
Top Width(m):
    Depth(m):
Bot Width(m):
LtSdSlp(h/v):
RtSdSlp(h/v):
```

```
        Name: ch5                 From Node: xs6                 Length(m): 104.00
       Group: BASE                  To Node: xs5                     Count: 1

              UPSTREAM       DOWNSTREAM                 Friction Equation: Average Conveyance
    Geometry: Irregular      Irregular                Solution Algorithm: Automatic
   Invert(m): 22.000         21.000                               Flow: Both
TClpInitZ(m): 3047.695       3047.695                   Contraction Coef: 0.100
 Manning's N:                                             Expansion Coef: 0.300
 Top Clip(m): 0.000          0.000                    Entrance Loss Coef: 0.000
 Bot Clip(m): 0.000          0.000                        Exit Loss Coef: 0.000
   Main XSec: xs6            xs5                        Outlet Ctrl Spec: Use dc or tw
 AuxElev1(m): 0.000          0.000                         Inlet Ctrl Spec: Use dn
   Aux XSec1:                                          Stabilizer Option: None
 AuxElev2(m): 0.000          0.000
   Aux XSec2:
Top Width(m):
    Depth(m):
Bot Width(m):
LtSdSlp(h/v):
RtSdSlp(h/v):
```

```
        Name: ch50                From Node: xs60                Length(m): 178.00
       Group: BASE                  To Node: xs50                    Count: 1

              UPSTREAM       DOWNSTREAM                 Friction Equation: Average Conveyance
    Geometry: Irregular      Irregular                Solution Algorithm: Automatic
   Invert(m): 27.000         24.000                               Flow: Both
TClpInitZ(m): 3047.695       3047.695                   Contraction Coef: 0.100
 Manning's N:                                             Expansion Coef: 0.300
 Top Clip(m): 0.000          0.000                    Entrance Loss Coef: 0.000
 Bot Clip(m): 0.000          0.000                        Exit Loss Coef: 0.000
   Main XSec: xs60           xs50                       Outlet Ctrl Spec: Use dc or tw
 AuxElev1(m): 0.000          0.000                         Inlet Ctrl Spec: Use dn
   Aux XSec1:                                          Stabilizer Option: None
 AuxElev2(m): 0.000          0.000
   Aux XSec2:
Top Width(m):
    Depth(m):
Bot Width(m):
LtSdSlp(h/v):
RtSdSlp(h/v):
```

```
        Name: ch6                 From Node: xs7                 Length(m): 140.00
       Group: BASE                  To Node: xs6                     Count: 1

              UPSTREAM       DOWNSTREAM                 Friction Equation: Average Conveyance
    Geometry: Irregular      Irregular                Solution Algorithm: Automatic
   Invert(m): 23.380         22.000                               Flow: Both
```

```
 TClpInitZ(m): 3047.695        3047.695                    Contraction Coef: 0.100
  Manning's N:                                                Expansion Coef: 0.300
  Top Clip(m): 0.000           0.000                     Entrance Loss Coef: 0.000
  Bot Clip(m): 0.000           0.000                         Exit Loss Coef: 0.000
    Main XSec: xs7             xs6                         Outlet Ctrl Spec: Use dc or tw
  AuxElev1(m): 0.000           0.000                         Inlet Ctrl Spec: Use dn
    Aux XSec1:                                             Stabilizer Option: None
  AuxElev2(m): 0.000           0.000
    Aux XSec2:
 Top Width(m):
     Depth(m):
 Bot Width(m):
 LtSdSlp(h/v):
 RtSdSlp(h/v):
```

```
         Name: ch60                 From Node: xs70                Length(m): 137.00
        Group: BASE                   To Node: xs60                    Count: 1

               UPSTREAM        DOWNSTREAM                  Friction Equation: Average Conveyance
     Geometry: Irregular       Irregular                  Solution Algorithm: Automatic
    Invert(m): 29.000          27.000                                 Flow: Both
 TClpInitZ(m): 3047.695        3047.695                     Contraction Coef: 0.100
  Manning's N:                                                Expansion Coef: 0.300
  Top Clip(m): 0.000           0.000                     Entrance Loss Coef: 0.000
  Bot Clip(m): 0.000           0.000                         Exit Loss Coef: 0.000
    Main XSec: xs70            xs60                        Outlet Ctrl Spec: Use dc or tw
  AuxElev1(m): 0.000           0.000                         Inlet Ctrl Spec: Use dn
    Aux XSec1:                                             Stabilizer Option: None
  AuxElev2(m): 0.000           0.000
    Aux XSec2:
 Top Width(m):
     Depth(m):
 Bot Width(m):
 LtSdSlp(h/v):
 RtSdSlp(h/v):
```

```
         Name: ch7                  From Node: xs8                 Length(m): 142.00
        Group: BASE                   To Node: xs7                     Count: 1

               UPSTREAM        DOWNSTREAM                  Friction Equation: Average Conveyance
     Geometry: Irregular       Irregular                  Solution Algorithm: Automatic
    Invert(m): 25.000          23.380                                 Flow: Both
 TClpInitZ(m): 3047.695        3047.695                     Contraction Coef: 0.100
  Manning's N:                                                Expansion Coef: 0.300
  Top Clip(m): 0.000           0.000                     Entrance Loss Coef: 0.000
  Bot Clip(m): 0.000           0.000                         Exit Loss Coef: 0.000
    Main XSec: xs8             xs7                         Outlet Ctrl Spec: Use dc or tw
  AuxElev1(m): 0.000           0.000                         Inlet Ctrl Spec: Use dn
    Aux XSec1:                                             Stabilizer Option: None
  AuxElev2(m): 0.000           0.000
    Aux XSec2:
 Top Width(m):
     Depth(m):
 Bot Width(m):
 LtSdSlp(h/v):
 RtSdSlp(h/v):
```

```
--------------------------------------------------------------------------------------------------
         Name: ch70                 From Node: xs75                Length(m): 80.00
        Group: BASE                   To Node: xs70                    Count: 1

                UPSTREAM       DOWNSTREAM                 Friction Equation: Average Conveyance
     Geometry: Irregular       Irregular                Solution Algorithm: Automatic
    Invert(m): 31.000          29.000                                Flow: Both
  TClpInitZ(m): 3047.695       3047.695                   Contraction Coef: 0.100
   Manning's N:                                            Expansion Coef: 0.300
   Top Clip(m): 0.000          0.000                    Entrance Loss Coef: 0.000
   Bot Clip(m): 0.000          0.000                        Exit Loss Coef: 0.000
     Main XSec: xs70           xs70                       Outlet Ctrl Spec: Use dc or tw
   AuxElev1(m): 0.000          0.000                        Inlet Ctrl Spec: Use dn
     Aux XSec1:                                          Stabilizer Option: None
   AuxElev2(m): 0.000          0.000
     Aux XSec2:
  Top Width(m):
      Depth(m):
  Bot Width(m):
  LtSdSlp(h/v):
  RtSdSlp(h/v):


==================================================================================
==== Drop Strcutures ==============================================================
==================================================================================

         Name:                      From Node:                     Length(m): 0.00
        Group: BASE                   To Node:                         Count: 1

                UPSTREAM       DOWNSTREAM                 Friction Equation: Average Conveyance
     Geometry: Circular        Circular                 Solution Algorithm: Automatic
     Span(cm): 0.00            0.00                                  Flow: Both
     Rise(cm): 0.00            0.00                     Entrance Loss Coef: 0.000
    Invert(m): 0.000           0.000                        Exit Loss Coef: 0.000
   Manning's N: 0.000000       0.000000                   Outlet Ctrl Spec: Use dc or tw
  Top Clip(cm): 0.000          0.000                        Inlet Ctrl Spec: Use dn
  Bot Clip(cm): 0.000          0.000                          Solution Incs: 10

Upstream FHWA Inlet Edge Description:
Circular Concrete: Square edge w/ headwall

Downstream FHWA Inlet Edge Description:
Circular Concrete: Square edge w/ headwall


==================================================================================
==== Weirs ========================================================================
==================================================================================

         Name: Orifice42A           From Node: StageArea
        Group: BASE                   To Node: mhp42A
         Flow: Both                      Count: 2
         Type: Vertical: Mavis       Geometry: Circular

                     Span(cm): 60.96
                     Rise(cm): 60.96
                    Invert(m): 15.090
```

```
Control Elevation(m): 15.090
                                                TABLE
     Bottom Clip(cm): 0.000
        Top Clip(cm): 0.000
  Weir Discharge Coef: 2.650
Orifice Discharge Coef: 0.850


---------------------------------------------------------------------------------------------
   Name: Spillwaylake1        From Node: lake
  Group: BASE                   To Node: xs75
   Flow: Both                     Count: 1
   Type: Vertical: Paved       Geometry: Rectangular

            Span(cm): 900.00
            Rise(cm): 280.00
           Invert(m): 40.000
Control Elevation(m): 40.000
                                                TABLE
     Bottom Clip(cm): 0.000
        Top Clip(cm): 0.000
  Weir Discharge Coef: 2.650
Orifice Discharge Coef: 0.850


---------------------------------------------------------------------------------------------
   Name: Spillwaylake2        From Node: lake
  Group: BASE                   To Node: xs75
   Flow: Both                     Count: 1
   Type: Vertical: Paved       Geometry: Rectangular

            Span(cm): 600.00
            Rise(cm): 280.00
           Invert(m): 40.000
Control Elevation(m): 40.000
                                                TABLE
     Bottom Clip(cm): 0.000
        Top Clip(cm): 0.000
  Weir Discharge Coef: 2.650
Orifice Discharge Coef: 0.850


---------------------------------------------------------------------------------------------
   Name: SPP36                From Node: StageArea
  Group: BASE                   To Node: mhp36
   Flow: Both                     Count: 1
   Type: Horizontal            Geometry: Rectangular

            Span(cm): 940.00
            Rise(cm): 55.00
           Invert(m): 17.070
Control Elevation(m): 17.070
                                                TABLE
     Bottom Clip(cm): 0.000
        Top Clip(cm): 0.000
  Weir Discharge Coef: 2.650
Orifice Discharge Coef: 0.850
```

```
        Name: SPP42A              From Node: StageArea
       Group: BASE                  To Node: mhp42A
        Flow: Both                    Count: 1
        Type: Horizontal           Geometry: Rectangular

                  Span(cm): 620.00
                  Rise(cm): 55.00
                 Invert(m): 17.070
     Control Elevation(m): 17.070
                                                TABLE
          Bottom Clip(cm): 0.000
             Top Clip(cm): 0.000
     Weir Discharge Coef: 2.650
  Orifice Discharge Coef: 0.850
```

```
        Name: SPP60               From Node: StageArea
       Group: BASE                  To Node: mhp60
        Flow: Both                    Count: 1
        Type: Horizontal           Geometry: Rectangular

                  Span(cm): 850.00
                  Rise(cm): 55.00
                 Invert(m): 17.070
     Control Elevation(m): 17.070
                                                TABLE
          Bottom Clip(cm): 0.000
             Top Clip(cm): 0.000
     Weir Discharge Coef: 2.650
  Orifice Discharge Coef: 0.850
```

```
        Name: SPPNew1             From Node: StageArea
       Group: BASE                  To Node: mhpNew1
        Flow: Both                    Count: 1
        Type: Horizontal           Geometry: Rectangular

                  Span(cm): 758.00
                  Rise(cm): 55.00
                 Invert(m): 17.070
     Control Elevation(m): 17.070
                                                TABLE
          Bottom Clip(cm): 0.000
             Top Clip(cm): 0.000
     Weir Discharge Coef: 2.650
  Orifice Discharge Coef: 0.850
```

```
        Name: SPPNew2             From Node: StageArea
       Group: BASE                  To Node: mhpNew2
        Flow: Both                    Count: 1
        Type: Horizontal           Geometry: Rectangular

                  Span(cm): 758.00
                  Rise(cm): 55.00
                 Invert(m): 17.070
```

```
Control Elevation(m): 17.070
                                                TABLE
     Bottom Clip(cm): 0.000
        Top Clip(cm): 0.000
   Weir Discharge Coef: 2.650
Orifice Discharge Coef: 0.850


-----------------------------------------------------------------------------------------------
    Name: SPPNew3              From Node: StageArea
   Group: BASE                   To Node: mhpNew3
    Flow: Both                     Count: 1
    Type: Horizontal            Geometry: Rectangular

              Span(cm): 758.00
              Rise(cm): 55.00
             Invert(m): 17.070
Control Elevation(m): 17.070
                                                TABLE
     Bottom Clip(cm): 0.000
        Top Clip(cm): 0.000
   Weir Discharge Coef: 2.650
Orifice Discharge Coef: 0.850


-----------------------------------------------------------------------------------------------
    Name: weir2                From Node: xs2
   Group: BASE                   To Node: StageArea
    Flow: Both                     Count: 1
    Type: Vertical: Gravel      Geometry: Rectangular

              Span(cm): 2300.00
              Rise(cm): 200.00
             Invert(m): 18.500
Control Elevation(m): 18.500
                                                TABLE
     Bottom Clip(cm): 0.000
        Top Clip(cm): 0.000
   Weir Discharge Coef: 2.650
Orifice Discharge Coef: 0.850


-----------------------------------------------------------------------------------------------
    Name: weir30               From Node: xs30
   Group: BASE                   To Node: StageArea
    Flow: Both                     Count: 1
    Type: Vertical: Gravel      Geometry: Irregular

                  XSec: weir30
             Invert(m): 20.000
Control Elevation(m): 20.000
Struct Opening Dim(m): 3047.70
                                                TABLE
    Bottom Clip(m): 0.000
       Top Clip(m): 0.000
   Weir Discharge Coef: 2.650
Orifice Discharge Coef: 0.850
```

```
---------------------------------------------------------------------------------------------
        Name: weir40-2            From Node: xs40
       Group: BASE                  To Node: xs30
        Flow: Both                    Count: 1
        Type: Vertical: Gravel     Geometry: Irregular

                      XSec: weir40-2
                 Invert(m): 22.000
      Control Elevation(m): 22.000
     Struct Opening Dim(m): 3047.70
                                          TABLE
            Bottom Clip(m): 0.000
               Top Clip(m): 0.000
      Weir Discharge Coef: 2.650
    Orifice Discharge Coef: 0.850


---------------------------------------------------------------------------------------------
        Name: weir50              From Node: xs50
       Group: BASE                  To Node: xs4
        Flow: Both                    Count: 1
        Type: Vertical: Gravel     Geometry: Irregular

                      XSec: weir50
                 Invert(m): 24.000
      Control Elevation(m): 24.000
     Struct Opening Dim(m): 3047.70
                                          TABLE
            Bottom Clip(m): 0.000
               Top Clip(m): 0.000
      Weir Discharge Coef: 2.650
    Orifice Discharge Coef: 0.850


---------------------------------------------------------------------------------------------
        Name: weir60              From Node: xs60
       Group: BASE                  To Node: xs6
        Flow: Both                    Count: 1
        Type: Vertical: Gravel     Geometry: Irregular

                      XSec: weir60
                 Invert(m): 27.000
      Control Elevation(m): 27.000
     Struct Opening Dim(m): 3047.70
                                          TABLE
            Bottom Clip(m): 0.000
               Top Clip(m): 0.000
      Weir Discharge Coef: 2.650
    Orifice Discharge Coef: 0.850


---------------------------------------------------------------------------------------------
        Name: weir70              From Node: xs70
       Group: BASE                  To Node: xs7
        Flow: Both                    Count: 1
        Type: Vertical: Gravel     Geometry: Irregular

                      XSec: weir70
                 Invert(m): 29.000
      Control Elevation(m): 29.000
```

```
      Struct Opening Dim(m): 3047.70
                                                TABLE
            Bottom Clip(m): 0.000
               Top Clip(m): 0.000
         Weir Discharge Coef: 2.650
      Orifice Discharge Coef: 0.850


-----------------------------------------------------------------------------------------------------
        Name: weir75                 From Node: xs75
       Group: BASE                     To Node: xs8
        Flow: Both                       Count: 1
        Type: Vertical: Gravel       Geometry: Irregular

                        XSec: weir75
                   Invert(m): 31.000
       Control Elevation(m): 31.000
      Struct Opening Dim(m): 3047.70
                                                TABLE
            Bottom Clip(m): 0.000
               Top Clip(m): 0.000
         Weir Discharge Coef: 2.650
      Orifice Discharge Coef: 0.850


=====================================================================================
==== Bridges ========================================================================
=====================================================================================

=====================================================================================
==== Breaches =======================================================================
=====================================================================================


=====================================================================================
==== Rating Curves ==================================================================
=====================================================================================


=====================================================================================
==== Hydrology Simulations ==========================================================
=====================================================================================

         Name: 100yr24hrpso2
     Filename: H:\Guayama\Guayama SMU\ICPR3\100yr24hrpso2.R32

      Override Defaults: No

Time(hrs)        Print Inc(min)
---------------- ----------------
24.000           5.00

-----------------------------------------------------------------------------------------------------
         Name: 2yr24hrpso2
     Filename: H:\Guayama\Guayama SMU\ICPR3\2yr24hrpso2.R32

      Override Defaults: Yes
    Storm Duration(hrs): 24.00
          Rainfall File: Scsii-24
    Rainfall Amount(cm): 12.45
```

```
Time(hrs)       Print Inc(min)
--------------- ---------------
24.000          5.00

==========================================================================================
==== Routing Simulations ================================================================
==========================================================================================

        Name: 100yr24hrpso2       Hydrology Sim: 100yr24hrpso2
    Filename: H:\Guayama\Guayama SMU\ICPR3\100yr24hrpso2.I32

     Execute: Yes         Restart: No            Patch: No
  Alternative: No

        Max Delta Z(m): 0.50                     Delta Z Factor: 0.00500
   Time Step Optimizer: 0.000
       Start Time(hrs): 0.000                     End Time(hrs): 24.00
    Min Calc Time(sec): 10.0000              Max Calc Time(sec): 60.0000
       Boundary Stages:                          Boundary Flows:


Time(hrs)       Print Inc(min)
--------------- ---------------
24.000          5.000

Group           Run
--------------- -----
BASE            Yes

------------------------------------------------------------------------------------------
        Name: 2yr24hrpso2         Hydrology Sim: 2yr24hrpso2
    Filename: H:\Guayama\Guayama SMU\ICPR3\2yr24hrpso2.I32

     Execute: No          Restart: No            Patch: No
  Alternative: No

        Max Delta Z(m): 0.50                     Delta Z Factor: 0.00500
   Time Step Optimizer: 0.000
       Start Time(hrs): 0.000                     End Time(hrs): 24.00
    Min Calc Time(sec): 10.0000              Max Calc Time(sec): 60.0000
       Boundary Stages:                          Boundary Flows:


Time(hrs)       Print Inc(min)
--------------- ---------------
24.000          5.000

Group           Run
--------------- -----
BASE            Yes
```

APPENDIX C:

adICPR Hydrologic-Hydraulic Input and Output Files for Future Condition

==== Basins ====

```
Name: BasinEast                 Node: xs310                 Status: Onsite
Group: BASE                     Type: SCS Unit Hydrograph

Unit Hydrograph: Uh484                  Peaking Factor: 484.0
Rainfall File: Scsii-24             Storm Duration(hrs): 24.00
Rainfall Amount(cm): 30.480           Time of Conc(min): 33.00
Area(ha): 49.400                        Time Shift(hrs): 0.00
Curve Number: 80.00                Max Allowable Q(cms): 28316.822
DCIA(%): 0.00
```

```
Name: MalaniaLake               Node: lake                  Status: Onsite
Group: BASE                     Type: SCS Unit Hydrograph

Unit Hydrograph: Uh484                  Peaking Factor: 484.0
Rainfall File: Scsii-24             Storm Duration(hrs): 24.00
Rainfall Amount(cm): 30.480           Time of Conc(min): 47.00
Area(ha): 243.700                       Time Shift(hrs): 0.00
Curve Number: 79.00                Max Allowable Q(cms): 28316.822
DCIA(%): 0.00
```

```
Name: MelaniaCreek              Node: xs8                   Status: Onsite
Group: BASE                     Type: SCS Unit Hydrograph

Unit Hydrograph: Uh484                  Peaking Factor: 484.0
Rainfall File: Scsii-24             Storm Duration(hrs): 24.00
Rainfall Amount(cm): 30.480           Time of Conc(min): 48.00
Area(ha): 167.500                       Time Shift(hrs): 0.00
Curve Number: 80.00                Max Allowable Q(cms): 28316.822
DCIA(%): 0.00
```

```
Name: Site1                     Node: StageArea             Status: Onsite
Group: BASE                     Type: SCS Unit Hydrograph

Unit Hydrograph: Uh484                  Peaking Factor: 484.0
Rainfall File: Scsii-24             Storm Duration(hrs): 24.00
Rainfall Amount(cm): 30.480           Time of Conc(min): 8.00
Area(ha): 17.900                        Time Shift(hrs): 0.00
Curve Number: 92.00                Max Allowable Q(cms): 28316.822
DCIA(%): 0.00
```

```
Name: Site2a                    Node: u/scrossing1          Status: Onsite
Group: BASE                     Type: SCS Unit Hydrograph

Unit Hydrograph: Uh484                  Peaking Factor: 484.0
Rainfall File: Scsii-24             Storm Duration(hrs): 24.00
Rainfall Amount(cm): 30.480           Time of Conc(min): 8.00
```

```
Area(ha): 7.990                    Time Shift(hrs): 0.00
Curve Number: 92.00                Max Allowable Q(cms): 28316.822
DCIA(%): 0.00

-----------------------------------------------------------------------------------------
Name: Site2b                       Node: u/sch2b                    Status: Onsite
Group: BASE                        Type: SCS Unit Hydrograph

Unit Hydrograph: Uh484                   Peaking Factor: 484.0
Rainfall File: Scsii-24            Storm Duration(hrs): 24.00
Rainfall Amount(cm): 30.480          Time of Conc(min): 5.00
Area(ha): 4.500                        Time Shift(hrs): 0.00
Curve Number: 92.00                Max Allowable Q(cms): 28316.822
DCIA(%): 0.00

-----------------------------------------------------------------------------------------
Name: Site3a                       Node: u/schF1                    Status: Onsite
Group: BASE                        Type: SCS Unit Hydrograph

Unit Hydrograph: Uh484                   Peaking Factor: 484.0
Rainfall File: Scsii-24            Storm Duration(hrs): 24.00
Rainfall Amount(cm): 30.480          Time of Conc(min): 5.00
Area(ha): 4.800                        Time Shift(hrs): 0.00
Curve Number: 92.00                Max Allowable Q(cms): 28316.822
DCIA(%): 0.00

-----------------------------------------------------------------------------------------
Name: Site3b                       Node: u/schF2                    Status: Onsite
Group: BASE                        Type: SCS Unit Hydrograph

Unit Hydrograph: Uh484                   Peaking Factor: 484.0
Rainfall File: Scsii-24            Storm Duration(hrs): 24.00
Rainfall Amount(cm): 30.480          Time of Conc(min): 6.00
Area(ha): 15.500                       Time Shift(hrs): 0.00
Curve Number: 92.00                Max Allowable Q(cms): 28316.822
DCIA(%): 0.00

-----------------------------------------------------------------------------------------
Name: Site4                        Node: xs75                       Status: Onsite
Group: BASE                        Type: SCS Unit Hydrograph

Unit Hydrograph: Uh484                   Peaking Factor: 484.0
Rainfall File: Scsii-24            Storm Duration(hrs): 24.00
Rainfall Amount(cm): 30.480          Time of Conc(min): 10.00
Area(ha): 41.270                       Time Shift(hrs): 0.00
Curve Number: 77.00                Max Allowable Q(cms): 28316.822
DCIA(%): 0.00

=========================================================================================
==== Nodes ==============================================================================
=========================================================================================

Name: bndry1          Base Flow(cms): 0.000          Init Stage(m): 18.000
```

Group: BASE
Type: Time/Stage
Warn Stage(m): 0.000

Time(hrs)	Stage(m)
0.00	18.000
24.00	18.000

Name: bndry2
Group: BASE
Type: Time/Stage
Base Flow(cms): 0.000
Init Stage(m): 14.710
Warn Stage(m): 0.000

Time(hrs)	Stage(m)
0.00	14.710
24.00	14.710

Name: lake
Group: BASE
Type: Stage/Area
Base Flow(cms): 0.000
Init Stage(m): 40.000
Warn Stage(m): 0.000

Stage(m)	Area(ha)
40.000	9.1900
42.000	9.1900
42.800	9.1900

Name: mhp36
Group: BASE
Type: Stage/Area
Base Flow(cms): 0.000
Init Stage(m): 14.700
Warn Stage(m): 0.000

Stage(m)	Area(ha)

Name: mhp42A
Group: BASE
Type: Stage/Area
Base Flow(cms): 0.000
Init Stage(m): 14.700
Warn Stage(m): 0.000

Stage(m)	Area(ha)

Name: mhp42B
Group: BASE
Type: Stage/Area
Base Flow(cms): 0.000
Init Stage(m): 14.700
Warn Stage(m): 0.000

Stage(m)	Area(ha)

```
--------------- ---------------

-----------------------------------------------------------------------------------------
     Name: mhp60                Base Flow(cms): 0.000          Init Stage(m): 14.700
    Group: BASE                                               Warn Stage(m): 0.000
     Type: Stage/Area


      Stage(m)        Area(ha)
--------------- ---------------

-----------------------------------------------------------------------------------------
     Name: mhpNew1              Base Flow(cms): 0.000          Init Stage(m): 14.700
    Group: BASE                                               Warn Stage(m): 0.000
     Type: Stage/Area


      Stage(m)        Area(ha)
--------------- ---------------

-----------------------------------------------------------------------------------------
     Name: mhpNew2              Base Flow(cms): 0.000          Init Stage(m): 14.700
    Group: BASE                                               Warn Stage(m): 0.000
     Type: Stage/Area


      Stage(m)        Area(ha)
--------------- ---------------

-----------------------------------------------------------------------------------------
     Name: mhpNew3              Base Flow(cms): 0.000          Init Stage(m): 14.700
    Group: BASE                                               Warn Stage(m): 0.000
     Type: Stage/Area


      Stage(m)        Area(ha)
--------------- ---------------

-----------------------------------------------------------------------------------------
     Name: StageArea            Base Flow(cms): 0.000          Init Stage(m): 14.700
    Group: BASE                                               Warn Stage(m): 0.000
     Type: Stage/Area


      Stage(m)        Area(ha)
--------------- ---------------
        14.700          3.9700
        18.500          6.2100

-----------------------------------------------------------------------------------------
     Name: u/sch2b              Base Flow(cms): 0.000          Init Stage(m): 28.500
    Group: BASE                                               Warn Stage(m): 0.000
     Type: Stage/Area


      Stage(m)        Area(ha)
--------------- ---------------
```

Name: u/schF1 Base Flow(cms): 0.000 Init Stage(m): 23.000
Group: BASE Warn Stage(m): 0.000
Type: Stage/Area

Stage(m)	Area(ha)

Name: u/schF2 Base Flow(cms): 0.000 Init Stage(m): 19.500
Group: BASE Warn Stage(m): 0.000
Type: Stage/Area

Stage(m)	Area(ha)

Name: u/scrossing1 Base Flow(cms): 0.000 Init Stage(m): 21.000
Group: BASE Warn Stage(m): 0.000
Type: Stage/Area

Stage(m)	Area(ha)

Name: u/scrossing2 Base Flow(cms): 0.000 Init Stage(m): 24.000
Group: BASE Warn Stage(m): 0.000
Type: Stage/Area

Stage(m)	Area(ha)

Name: xs1 Base Flow(cms): 0.000 Init Stage(m): 18.000
Group: BASE Warn Stage(m): 0.000
Type: Stage/Area

Stage(m)	Area(ha)

Name: xs15 Base Flow(cms): 0.000 Init Stage(m): 14.710
Group: BASE Warn Stage(m): 0.000
Type: Stage/Area

Stage(m)	Area(ha)

Name: xs2 Base Flow(cms): 0.000 Init Stage(m): 18.340

```
     Group: BASE                                                    Warn Stage(m): 0.000
      Type: Stage/Area


       Stage(m)        Area(ha)
--------------- ---------------

-------------------------------------------------------------------------------------------
      Name: xs3                 Base Flow(cms): 0.000               Init Stage(m): 20.000
     Group: BASE                                                    Warn Stage(m): 0.000
      Type: Stage/Area


       Stage(m)        Area(ha)
--------------- ---------------

-------------------------------------------------------------------------------------------
      Name: xs300               Base Flow(cms): 0.000               Init Stage(m): 20.000
     Group: BASE                                                    Warn Stage(m): 0.000
      Type: Stage/Area


       Stage(m)        Area(ha)
--------------- ---------------

-------------------------------------------------------------------------------------------
      Name: xs310               Base Flow(cms): 0.000               Init Stage(m): 21.000
     Group: BASE                                                    Warn Stage(m): 0.000
      Type: Stage/Area


       Stage(m)        Area(ha)
--------------- ---------------

-------------------------------------------------------------------------------------------
      Name: xs4                 Base Flow(cms): 0.000               Init Stage(m): 20.300
     Group: BASE                                                    Warn Stage(m): 0.000
      Type: Stage/Area


       Stage(m)        Area(ha)
--------------- ---------------

-------------------------------------------------------------------------------------------
      Name: xs5                 Base Flow(cms): 0.000               Init Stage(m): 20.770
     Group: BASE                                                    Warn Stage(m): 0.000
      Type: Stage/Area


       Stage(m)        Area(ha)
--------------- ---------------

-------------------------------------------------------------------------------------------
      Name: xs6                 Base Flow(cms): 0.000               Init Stage(m): 21.390
     Group: BASE                                                    Warn Stage(m): 0.000
      Type: Stage/Area
```

Stage(m)	Area(ha)

Name: xs7 Base Flow(cms): 0.000 Init Stage(m): 23.380
Group: BASE Warn Stage(m): 0.000
Type: Stage/Area

Stage(m)	Area(ha)

Name: xs70 Base Flow(cms): 0.000 Init Stage(m): 29.000
Group: BASE Warn Stage(m): 0.000
Type: Stage/Area

Stage(m)	Area(ha)

Name: xs75 Base Flow(cms): 0.000 Init Stage(m): 31.000
Group: BASE Warn Stage(m): 0.000
Type: Stage/Area

Stage(m)	Area(ha)

Name: xs8 Base Flow(cms): 0.000 Init Stage(m): 25.000
Group: BASE Warn Stage(m): 0.000
Type: Stage/Area

Stage(m)	Area(ha)

==== Cross Sections ====

Name: weir2 Group: BASE
Encroachment: No

Station(m)	Elevation(m)	Manning's N
0.000	19.000	0.040000
61.500	18.500	0.040000

Name: weir40-1 Group: BASE
Encroachment: No

Station(m)	Elevation(m)	Manning's N
0.000	17.000	0.040000
37.000	19.000	0.040000
56.600	20.000	0.040000
221.600	22.000	0.040000

Name: weir40-2 Group: BASE
Encroachment: No

Station(m)	Elevation(m)	Manning's N
0.000	21.000	0.040000
67.900	22.000	0.040000

Name: weir50 Group: BASE
Encroachment: No

Station(m)	Elevation(m)	Manning's N
0.000	23.000	0.040000
122.500	24.000	0.040000

Name: weir60 Group: BASE
Encroachment: No

Station(m)	Elevation(m)	Manning's N
0.000	27.000	0.040000
31.500	26.000	0.040000

Name: weir70 Group: BASE
Encroachment: No

Station(m)	Elevation(m)	Manning's N
0.000	28.000	0.040000
101.000	29.000	0.040000

Name: weir75 Group: BASE
Encroachment: No

Station(m)	Elevation(m)	Manning's N
0.000	31.000	0.040000
55.000	30.000	0.040000

Name: xs1 Group: BASE
Encroachment: No

Station(m)	Elevation(m)	Manning's N
0.000	18.720	0.040000
16.100	18.900	0.040000
27.200	17.870	0.040000
49.600	20.200	0.040000
76.000	21.130	0.040000
91.400	20.220	0.040000
112.200	20.080	0.040000
120.000	20.900	0.040000
127.400	21.400	0.040000
140.000	18.170	0.040000
152.800	21.490	0.040000
160.500	21.650	0.040000

Name: xs100 Group: BASE
Encroachment: No

Station(m)	Elevation(m)	Manning's N
0.000	17.000	0.040000
40.000	17.000	0.040000
154.800	17.000	0.040000

Name: xs15 Group: BASE
Encroachment: No

Station(m)	Elevation(m)	Manning's N
0.000	16.530	0.040000
10.300	14.710	0.040000
19.000	16.710	0.040000
38.400	15.000	0.040000
50.400	16.470	0.040000
61.600	14.920	0.040000
81.700	16.510	0.040000
96.900	17.460	0.040000
128.500	17.070	0.040000
142.500	17.240	0.040000
168.900	17.400	0.040000
184.700	17.060	0.040000
214.000	16.910	0.040000
240.300	15.180	0.040000
273.200	18.000	0.040000
290.000	18.230	0.040000
305.100	18.070	0.040000
335.000	17.600	0.040000
350.800	17.500	0.040000
380.600	17.600	0.040000

Name: xs2 Group: BASE
Encroachment: No

Station(m)	Elevation(m)	Manning's N
-117.000	18.500	0.040000
-93.800	19.000	0.040000
-74.800	19.500	0.040000
-63.800	18.740	0.040000
-56.000	19.500	0.040000
-36.000	19.000	0.040000
0.000	19.000	0.040000
18.300	19.500	0.040000
21.900	18.500	0.040000
23.400	18.340	0.040000
24.500	18.500	0.040000
25.400	19.500	0.040000
26.900	20.000	0.040000
33.300	21.000	0.040000
41.400	22.000	0.040000

Name: xs200 Group: BASE
Encroachment: No

Station(m)	Elevation(m)	Manning's N
0.000	19.000	0.040000
88.000	20.000	0.040000
167.000	21.000	0.040000

Name: xs250 Group: BASE
Encroachment: No

Station(m)	Elevation(m)	Manning's N
-96.000	20.000	0.040000
0.000	19.000	0.040000
51.000	20.000	0.040000
85.300	21.000	0.040000
156.800	22.000	0.040000

Name: xs3 Group: BASE
Encroachment: No

Station(m)	Elevation(m)	Manning's N
0.000	22.000	0.040000
52.200	21.000	0.040000
131.800	20.000	0.040000
140.900	20.000	0.040000
155.500	21.000	0.040000

158.400	22.000	0.040000
161.200	23.000	0.040000

Name: xs300 Group: BASE
Encroachment: No

Station(m)	Elevation(m)	Manning's N
-0.100	24.000	0.040000
0.000	21.000	0.040000
60.000	20.000	0.040000
86.000	21.000	0.040000
109.200	22.000	0.040000
123.400	23.000	0.040000
128.100	24.000	0.040000
136.200	26.000	0.040000
140.800	27.000	0.040000
144.900	28.000	0.040000

Name: xs30b Group: BASE
Encroachment: No

Station(m)	Elevation(m)	Manning's N
-10.000	19.500	0.040000
0.000	19.500	0.040000
46.000	18.500	0.040000
66.000	18.000	0.040000
70.000	18.500	0.040000
74.000	19.000	0.040000
78.000	19.500	0.040000

Name: xs4 Group: BASE
Encroachment: No

Station(m)	Elevation(m)	Manning's N
0.000	24.000	0.040000
0.000	21.000	0.040000
202.400	20.300	0.040000
284.500	22.000	0.040000
299.900	23.000	0.040000
310.700	24.000	0.040000

Name: xs5 Group: BASE
Encroachment: No

Station(m)	Elevation(m)	Manning's N
0.000	25.000	0.040000
0.000	22.100	0.040000

270.500	22.000	0.040000
273.700	20.770	0.040000
282.500	22.000	0.040000
345.500	23.000	0.040000
364.900	24.000	0.040000
404.400	25.000	0.040000
451.300	26.000	0.040000

Name: xs6 Group: BASE
Encroachment: No

Station(m)	Elevation(m)	Manning's N
0.000	27.000	0.040000
0.000	25.200	0.040000
23.500	25.000	0.040000
191.500	24.000	0.040000
353.000	24.000	0.040000
380.500	23.000	0.040000
384.000	21.390	0.040000
388.000	23.000	0.040000
391.700	24.000	0.040000
395.200	25.000	0.040000
399.000	26.000	0.040000
410.700	27.000	0.040000
431.700	27.000	0.040000
508.300	27.000	0.040000
543.600	28.000	0.040000

Name: xs7 Group: BASE
Encroachment: No

Station(m)	Elevation(m)	Manning's N
0.000	35.000	0.040000
11.300	34.000	0.040000
24.000	33.000	0.040000
36.400	32.000	0.040000
83.100	29.000	0.040000
131.600	27.400	0.040000
137.700	27.420	0.040000
184.500	28.000	0.040000
317.120	27.000	0.040000
408.300	26.000	0.040000
434.300	25.000	0.040000
476.800	24.000	0.040000
480.000	23.380	0.040000
483.800	24.000	0.040000
490.500	25.000	0.040000
493.000	26.000	0.040000
494.700	27.000	0.040000
528.500	28.000	0.040000
571.700	28.000	0.040000
573.400	27.160	0.040000
577.900	27.160	0.040000
599.800	26.820	0.040000

Name: xs70 Group: BASE
Encroachment: No

Station(m)	Elevation(m)	Manning's N
0.000	35.000	0.040000
30.500	31.000	0.040000
108.700	30.000	0.040000
325.700	29.000	0.040000

Name: xs8 Group: BASE
Encroachment: No

Station(m)	Elevation(m)	Manning's N
0.000	29.040	0.040000
52.800	29.620	0.040000
101.700	28.620	0.040000
116.200	27.620	0.040000
130.600	26.620	0.040000
174.400	25.620	0.040000
177.400	25.000	0.040000
181.100	25.620	0.040000
187.300	26.620	0.040000
189.600	27.620	0.040000
191.100	28.620	0.040000
224.800	29.620	0.040000
268.200	29.620	0.040000

==== Operating Tables ====

Name: Group: BASE
Type: Bottom Clip
Function: Time vs. Depth of Clip

Time(hrs)	Clip Depth(cm)

==== Pipes ====

Name: Crossing1 From Node: u/scrossing1 Length(m): 68.00
Group: BASE To Node: u/schF2 Count: 2
Friction Equation: Average Conveyance
Solution Algorithm: Automatic
Flow: Both
Entrance Loss Coef: 0.50
Exit Loss Coef: 1.00
Bend Loss Coef: 0.00
Outlet Ctrl Spec: Use dc or tw
Inlet Ctrl Spec: Use dn
Stabilizer Option: None

	UPSTREAM	DOWNSTREAM
Geometry:	Rectangular	Rectangular
Span(cm):	152.40	152.40
Rise(cm):	152.40	152.40
Invert(m):	21.000	19.500
Manning's N:	0.013000	0.013000
Top Clip(cm):	0.000	0.000
Bot Clip(cm):	0.000	0.000

Upstream FHWA Inlet Edge Description:
Rectangular Box: 30° to 75° wingwall flares

Downstream FHWA Inlet Edge Description:
Rectangular Box: 30° to 75° wingwall flares

Name:	Crossing2	From Node: u/scrossing2	Length(m):	46.80
Group:	BASE	To Node: u/schFl	Count:	1
			Friction Equation:	Average Conveyance
	UPSTREAM	DOWNSTREAM	Solution Algorithm:	Automatic
Geometry:	Rectangular	Rectangular	Flow:	Both
Span(cm):	152.40	152.40	Entrance Loss Coef:	0.50
Rise(cm):	152.40	152.40	Exit Loss Coef:	1.00
Invert(m):	24.000	23.000	Bend Loss Coef:	0.00
Manning's N:	0.013000	0.013000	Outlet Ctrl Spec:	Use dc or tw
Top Clip(cm):	0.000	0.000	Inlet Ctrl Spec:	Use dn
Bot Clip(cm):	0.000	0.000	Stabilizer Option:	None

Upstream FHWA Inlet Edge Description:
Rectangular Box: 30° to 75° wingwall flares

nstream FHWA Inlet Edge Description:
tangular Box: 30° to 75° wingwall flares

Name:	pipe36	From Node: mhp36	Length(m):	40.00
Group:	BASE	To Node: xs15	Count:	6
			Friction Equation:	Average Conveyance
	UPSTREAM	DOWNSTREAM	Solution Algorithm:	Automatic
Geometry:	Circular	Circular	Flow:	Both
Span(cm):	91.44	91.44	Entrance Loss Coef:	0.50
Rise(cm):	91.44	91.44	Exit Loss Coef:	1.00
Invert(m):	15.190	15.180	Bend Loss Coef:	0.00
Manning's N:	0.013000	0.013000	Outlet Ctrl Spec:	Use dc or tw
Top Clip(cm):	0.000	0.000	Inlet Ctrl Spec:	Use dn
Bot Clip(cm):	0.000	0.000	Stabilizer Option:	None

Upstream FHWA Inlet Edge Description:
Circular Concrete: Square edge w/ headwall

Downstream FHWA Inlet Edge Description:
Circular Concrete: Square edge w/ headwall

Name:	pipe42A	From Node: mhp42A	Length(m):	50.00
Group:	BASE	To Node: xs15	Count:	4
			Friction Equation:	Average Conveyance
	UPSTREAM	DOWNSTREAM	Solution Algorithm:	Automatic
Geometry:	Circular	Circular	Flow:	Both

Span(cm):	106.68	106.68	Entrance Loss Coef:	0.50
Rise(cm):	106.68	106.68	Exit Loss Coef:	1.00
Invert(m):	15.089	14.920	Bend Loss Coef:	0.00
Manning's N:	0.013000	0.013000	Outlet Ctrl Spec:	Use dc or tw
Top Clip(cm):	0.000	0.000	Inlet Ctrl Spec:	Use dn
Bot Clip(cm):	0.000	0.000	Stabilizer Option:	None

Upstream FHWA Inlet Edge Description:
Circular Concrete: Square edge w/ headwall

Downstream FHWA Inlet Edge Description:
Circular Concrete: Square edge w/ headwall

Name:	pipe42B	From Node: StageArea	Length(m):	37.00
Group:	BASE	To Node: xs15	Count:	4
			Friction Equation:	Average Conveyance
	UPSTREAM	DOWNSTREAM	Solution Algorithm:	Automatic
Geometry:	Circular	Circular	Flow:	Both
Span(cm):	106.68	106.68	Entrance Loss Coef:	0.50
Rise(cm):	106.68	106.68	Exit Loss Coef:	1.00
Invert(m):	15.075	14.710	Bend Loss Coef:	0.00
Manning's N:	0.013000	0.013000	Outlet Ctrl Spec:	Use dc or tw
Top Clip(cm):	0.000	0.000	Inlet Ctrl Spec:	Use dn
Bot Clip(cm):	0.000	0.000	Stabilizer Option:	None

Upstream FHWA Inlet Edge Description:
Circular Concrete: Square edge w/ headwall

Downstream FHWA Inlet Edge Description:
Circular Concrete: Square edge w/ headwall

Name:	pipe60	From Node: mhp60	Length(m):	38.30
Group:	BASE	To Node: xs15	Count:	4
			Friction Equation:	Average Conveyance
	UPSTREAM	DOWNSTREAM	Solution Algorithm:	Automatic
Geometry:	Circular	Circular	Flow:	Both
Span(cm):	152.40	152.40	Entrance Loss Coef:	0.50
Rise(cm):	152.40	152.40	Exit Loss Coef:	1.00
Invert(m):	15.520	15.000	Bend Loss Coef:	0.00
Manning's N:	0.013000	0.013000	Outlet Ctrl Spec:	Use dc or tw
Top Clip(cm):	0.000	0.000	Inlet Ctrl Spec:	Use dn
Bot Clip(cm):	0.000	0.000	Stabilizer Option:	None

Upstream FHWA Inlet Edge Description:
Circular Concrete: Square edge w/ headwall

Downstream FHWA Inlet Edge Description:
Circular Concrete: Square edge w/ headwall

Name:	pipecreek	From Node: xs2	Length(m):	20.30
Group:	BASE	To Node: xs1	Count:	4
			Friction Equation:	Average Conveyance
	UPSTREAM	DOWNSTREAM	Solution Algorithm:	Automatic
Geometry:	Circular	Circular	Flow:	Both
Span(cm):	152.40	152.40	Entrance Loss Coef:	0.50
Rise(cm):	152.40	152.40	Exit Loss Coef:	1.00
Invert(m):	18.340	18.170	Bend Loss Coef:	0.00
Manning's N:	0.013000	0.013000	Outlet Ctrl Spec:	Use dc or tw
Top Clip(cm):	0.000	0.000	Inlet Ctrl Spec:	Use dn
Bot Clip(cm):	0.000	0.000	Stabilizer Option:	None

Upstream FHWA Inlet Edge Description:
Circular Concrete: Square edge w/ headwall

Downstream FHWA Inlet Edge Description:
Circular Concrete: Square edge w/ headwall

Name:	pipenew1	From Node: mhpNew1	Length(m):	40.00
Group:	BASE	To Node: xs15	Count:	4
			Friction Equation:	Average Conveyance
	UPSTREAM	DOWNSTREAM	Solution Algorithm:	Automatic
Geometry:	Rectangular	Rectangular	Flow:	Both
Span(cm):	152.40	152.40	Entrance Loss Coef:	0.50
Rise(cm):	152.40	152.40	Exit Loss Coef:	1.00
Invert(m):	15.190	15.180	Bend Loss Coef:	0.00
Manning's N:	0.013000	0.013000	Outlet Ctrl Spec:	Use dc or tw
Top Clip(cm):	0.000	0.000	Inlet Ctrl Spec:	Use dn
Bot Clip(cm):	0.000	0.000	Stabilizer Option:	None

Upstream FHWA Inlet Edge Description:
Rectangular Box: 30° to 75° wingwall flares

Downstream FHWA Inlet Edge Description:
Rectangular Box: 30° to 75° wingwall flares

Name:	pipenew2	From Node: mhpNew2	Length(m):	40.00
Group:	BASE	To Node: xs15	Count:	4
			Friction Equation:	Average Conveyance
	UPSTREAM	DOWNSTREAM	Solution Algorithm:	Automatic
Geometry:	Rectangular	Rectangular	Flow:	Both
Span(cm):	152.40	152.40	Entrance Loss Coef:	0.50
Rise(cm):	152.40	152.40	Exit Loss Coef:	1.00
Invert(m):	15.190	15.180	Bend Loss Coef:	0.00
Manning's N:	0.013000	0.013000	Outlet Ctrl Spec:	Use dc or tw
Top Clip(cm):	0.000	0.000	Inlet Ctrl Spec:	Use dn
Bot Clip(cm):	0.000	0.000	Stabilizer Option:	None

Upstream FHWA Inlet Edge Description:
Rectangular Box: 30° to 75° wingwall flares

Downstream FHWA Inlet Edge Description:
Rectangular Box: 30° to 75° wingwall flares

Name:	pipenew3	From Node: mhpNew3	Length(m):	40.00
Group:	BASE	To Node: xs15	Count:	4
			Friction Equation:	Average Conveyance
	UPSTREAM	DOWNSTREAM	Solution Algorithm:	Automatic
Geometry:	Rectangular	Rectangular	Flow:	Both
Span(cm):	152.40	152.40	Entrance Loss Coef:	0.50
Rise(cm):	152.40	152.40	Exit Loss Coef:	1.00
Invert(m):	15.190	15.180	Bend Loss Coef:	0.00
Manning's N:	0.013000	0.013000	Outlet Ctrl Spec:	Use dc or tw
Top Clip(cm):	0.000	0.000	Inlet Ctrl Spec:	Use dn
Bot Clip(cm):	0.000	0.000	Stabilizer Option:	None

Upstream FHWA Inlet Edge Description:
Rectangular Box: 30° to 75° wingwall flares

Downstream FHWA Inlet Edge Description:
Rectangular Box: 30° to 75° wingwall flares

Channels

Name:	ch0	From Node: xs1	Length(m):	35.00
Group:	BASE	To Node: bndry1	Count:	1
			Friction Equation:	Average Conveyance
	UPSTREAM	DOWNSTREAM	Solution Algorithm:	Automatic
Geometry:	Irregular	Irregular	Flow:	Both
Invert(m):	18.000	18.000	Contraction Coef:	0.100
TClpInitZ(m):	3047.695	3047.695	Expansion Coef:	0.300
Manning's N:			Entrance Loss Coef:	0.000
Top Clip(m):	0.000	0.000	Exit Loss Coef:	0.000
Bot Clip(m):	0.000	0.000	Outlet Ctrl Spec:	Use dc or tw
Main XSec:	xs1	xs1	Inlet Ctrl Spec:	Use dn
AuxElev1(m):	0.000	0.000	Stabilizer Option:	None
Aux XSec1:				
AuxElev2(m):	0.000	0.000		
Aux XSec2:				
Top Width(m):				
Depth(m):				
Bot Width(m):				
LtSdSlp(h/v):				
RtSdSlp(h/v):				

Name:	ch10	From Node: xs15	Length(m):	35.00
Group:	BASE	To Node: bndry2	Count:	1
			Friction Equation:	Average Conveyance
	UPSTREAM	DOWNSTREAM	Solution Algorithm:	Automatic
Geometry:	Irregular	Irregular	Flow:	Both
Invert(m):	14.710	14.710		

TClpInitZ(m):	3047.695	3047.695	Contraction Coef:	0.100
Manning's N:			Expansion Coef:	0.300
Top Clip(m):	0.000	0.000	Entrance Loss Coef:	0.000
Bot Clip(m):	0.000	0.000	Exit Loss Coef:	0.000
Main XSec:	xs15	xs15	Outlet Ctrl Spec:	Use dc or tw
AuxElev1(m):	0.000	0.000	Inlet Ctrl Spec:	Use dn
Aux XSec1:			Stabilizer Option:	None
AuxElev2(m):	0.000	0.000		
Aux XSec2:				
Top Width(m):				
Depth(m):				
Bot Width(m):				
LtSdSlp(h/v):				
RtSdSlp(h/v):				

Name:	ch2	From Node: xs4	Length(m):	124.00
Group:	BASE	To Node: xs2	Count:	1

	UPSTREAM	DOWNSTREAM		
Geometry:	Irregular	Irregular	Friction Equation:	Average Conveyance
Invert(m):	20.300	18.340	Solution Algorithm:	Automatic
TClpInitZ(m):	3047.695	3047.695	Flow:	Both
Manning's N:			Contraction Coef:	0.100
Top Clip(m):	0.000	0.000	Expansion Coef:	0.300
Bot Clip(m):	0.000	0.000	Entrance Loss Coef:	0.000
Main XSec:	xs4	xs2	Exit Loss Coef:	0.000
AuxElev1(m):	0.000	0.000	Outlet Ctrl Spec:	Use dc or tw
Aux XSec1:			Inlet Ctrl Spec:	Use dn
AuxElev2(m):	0.000	0.000	Stabilizer Option:	None
Aux XSec2:				
Top Width(m):				
Depth(m):				
Bot Width(m):				
LtSdSlp(h/v):				
RtSdSlp(h/v):				

Name:	ch250	From Node: xs300	Length(m):	26.00
Group:	BASE	To Node: StageArea	Count:	1

	UPSTREAM	DOWNSTREAM		
Geometry:	Irregular	Irregular	Friction Equation:	Average Conveyance
Invert(m):	20.000	18.500	Solution Algorithm:	Automatic
TClpInitZ(m):	3047.695	3047.695	Flow:	Both
Manning's N:			Contraction Coef:	0.100
Top Clip(m):	0.000	0.000	Expansion Coef:	0.300
Bot Clip(m):	0.000	0.000	Entrance Loss Coef:	0.000
Main XSec:	xs300	xs300	Exit Loss Coef:	0.000
AuxElev1(m):	0.000	0.000	Outlet Ctrl Spec:	Use dc or tw
Aux XSec1:			Inlet Ctrl Spec:	Use dn
AuxElev2(m):	0.000	0.000	Stabilizer Option:	None
Aux XSec2:				
Top Width(m):				
Depth(m):				
Bot Width(m):				
LtSdSlp(h/v):				
RtSdSlp(h/v):				

Name: ch2b | From Node: u/sch2b | Length(m): 280.00
Group: BASE | To Node: u/scrossing2 | Count: 1

	UPSTREAM	DOWNSTREAM
Geometry:	Trapezoidal	Trapezoidal
Invert(m):	28.500	24.000
TClpInitZ(m):	3047.695	3047.695
Manning's N:	0.040000	0.040000
Top Clip(m):	0.000	0.000
Bot Clip(m):	0.000	0.000
Main XSec:		
AuxElev1(m):		
Aux XSec1:		
AuxElev2(m):		
Aux XSec2:		
Top Width(m):		
Depth(m):		
Bot Width(m):	1.200	1.200
LtSdSlp(h/v):	2.00	2.00
RtSdSlp(h/v):	2.00	2.00

Friction Equation:	Average Conveyance
Solution Algorithm:	Automatic
Flow:	Both
Contraction Coef:	0.100
Expansion Coef:	0.300
Entrance Loss Coef:	0.000
Exit Loss Coef:	0.000
Outlet Ctrl Spec:	Use dc or tw
Inlet Ctrl Spec:	Use dn
Stabilizer Option:	None

Name: ch300 | From Node: xs310 | Length(m): 100.00
Group: BASE | To Node: xs300 | Count: 1

	UPSTREAM	DOWNSTREAM
Geometry:	Irregular	Irregular
Invert(m):	21.000	20.000
TClpInitZ(m):	3047.695	3047.695
Manning's N:		
Top Clip(m):	0.000	0.000
Bot Clip(m):	0.000	0.000
Main XSec:	xs300	xs300
AuxElev1(m):	0.000	0.000
Aux XSec1:		
AuxElev2(m):	0.000	0.000
Aux XSec2:		
Top Width(m):		
Depth(m):		
Bot Width(m):		
LtSdSlp(h/v):		
RtSdSlp(h/v):		

Friction Equation:	Average Conveyance
Solution Algorithm:	Automatic
Flow:	Both
Contraction Coef:	0.100
Expansion Coef:	0.300
Entrance Loss Coef:	0.000
Exit Loss Coef:	0.000
Outlet Ctrl Spec:	Use dc or tw
Inlet Ctrl Spec:	Use dn
Stabilizer Option:	None

Name: ch4 | From Node: xs5 | Length(m): 122.00
Group: BASE | To Node: xs4 | Count: 1

	UPSTREAM	DOWNSTREAM
Geometry:	Irregular	Irregular
Invert(m):	20.770	20.300
TClpInitZ(m):	3047.695	3047.695
Manning's N:		
Top Clip(m):	0.000	0.000
Bot Clip(m):	0.000	0.000
Main XSec:	xs5	xs4
AuxElev1(m):	0.000	0.000

Friction Equation:	Average Conveyance
Solution Algorithm:	Automatic
Flow:	Both
Contraction Coef:	0.100
Expansion Coef:	0.300
Entrance Loss Coef:	0.000
Exit Loss Coef:	0.000
Outlet Ctrl Spec:	Use dc or tw
Inlet Ctrl Spec:	Use dn

```
    Aux XSec1:                                          Stabilizer Option: None
  AuxElev2(m): 0.000          0.000
    Aux XSec2:
 Top Width(m):
     Depth(m):
 Bot Width(m):
 LtSdSlp(h/v):
 RtSdSlp(h/v):
```

```
         Name: ch5                 From Node: xs6                Length(m): 104.00
        Group: BASE                  To Node: xs5                    Count: 1

               UPSTREAM        DOWNSTREAM                 Friction Equation: Average Conveyance
     Geometry: Irregular       Irregular                Solution Algorithm: Automatic
    Invert(m): 21.390          20.770                               Flow: Both
 TClpInitZ(m): 3047.695        3047.695                   Contraction Coef: 0.100
  Manning's N:                                              Expansion Coef: 0.300
  Top Clip(m): 0.000           0.000                   Entrance Loss Coef: 0.000
  Bot Clip(m): 0.000           0.000                       Exit Loss Coef: 0.000
    Main XSec: xs6             xs5                       Outlet Ctrl Spec: Use dc or tw
  AuxElev1(m): 0.000           0.000                        Inlet Ctrl Spec: Use dn
    Aux XSec1:                                           Stabilizer Option: None
  AuxElev2(m): 0.000           0.000
    Aux XSec2:
 Top Width(m):
     Depth(m):
 Bot Width(m):
 LtSdSlp(h/v):
 RtSdSlp(h/v):
```

```
         Name: ch6                 From Node: xs7                Length(m): 140.00
        Group: BASE                  To Node: xs6                    Count: 1

               UPSTREAM        DOWNSTREAM                 Friction Equation: Average Conveyance
     Geometry: Irregular       Irregular                Solution Algorithm: Automatic
    Invert(m): 23.380          21.390                               Flow: Both
 TClpInitZ(m): 3047.695        3047.695                   Contraction Coef: 0.100
  Manning's N:                                              Expansion Coef: 0.300
  Top Clip(m): 0.000           0.000                   Entrance Loss Coef: 0.000
  Bot Clip(m): 0.000           0.000                       Exit Loss Coef: 0.000
    Main XSec: xs7             xs6                       Outlet Ctrl Spec: Use dc or tw
  AuxElev1(m): 0.000           0.000                        Inlet Ctrl Spec: Use dn
    Aux XSec1:                                           Stabilizer Option: None
  AuxElev2(m): 0.000           0.000
    Aux XSec2:
 Top Width(m):
     Depth(m):
 Bot Width(m):
 LtSdSlp(h/v):
 RtSdSlp(h/v):
```

```
         Name: ch7-1               From Node: xs8                Length(m): 142.00
        Group: BASE                  To Node: xs7                    Count: 1
```

	UPSTREAM	DOWNSTREAM
Geometry:	Irregular	Irregular
Invert(m):	25.000	23.380
TClpInitZ(m):	3047.695	3047.695
Manning's N:		
Top Clip(m):	0.000	0.000
Bot Clip(m):	0.000	0.000
Main XSec:	xs8	xs7
AuxElev1(m):	0.000	0.000
Aux XSec1:		
AuxElev2(m):	0.000	0.000
Aux XSec2:		
Top Width(m):		
Depth(m):		
Bot Width(m):		
LtSdSlp(h/v):		
RtSdSlp(h/v):		

Friction Equation:	Average Conveyance
Solution Algorithm:	Automatic
Flow:	Both
Contraction Coef:	0.100
Expansion Coef:	0.300
Entrance Loss Coef:	0.000
Exit Loss Coef:	0.000
Outlet Ctrl Spec:	Use dc or tw
Inlet Ctrl Spec:	Use dn
Stabilizer Option:	None

Name: ch7-2 From Node: xs70 Length(m): 147.00
Group: BASE To Node: xs7 Count: 1

	UPSTREAM	DOWNSTREAM
Geometry:	Irregular	Irregular
Invert(m):	29.000	23.380
TClpInitZ(m):	3047.695	3047.695
Manning's N:		
Top Clip(m):	0.000	0.000
Bot Clip(m):	0.000	0.000
Main XSec:	xs70	xs7
AuxElev1(m):	0.000	0.000
Aux XSec1:		
AuxElev2(m):	0.000	0.000
Aux XSec2:		
Top Width(m):		
Depth(m):		
Bot Width(m):		
LtSdSlp(h/v):		
RtSdSlp(h/v):		

Friction Equation:	Average Conveyance
Solution Algorithm:	Automatic
Flow:	Both
Contraction Coef:	0.100
Expansion Coef:	0.300
Entrance Loss Coef:	0.000
Exit Loss Coef:	0.000
Outlet Ctrl Spec:	Use dc or tw
Inlet Ctrl Spec:	Use dn
Stabilizer Option:	None

Name: ch70 From Node: xs75 Length(m): 80.00
Group: BASE To Node: xs70 Count: 1

	UPSTREAM	DOWNSTREAM
Geometry:	Irregular	Irregular
Invert(m):	31.000	29.000
TClpInitZ(m):	3047.695	3047.695
Manning's N:		
Top Clip(m):	0.000	0.000
Bot Clip(m):	0.000	0.000
Main XSec:	xs70	xs70
AuxElev1(m):	0.000	0.000
Aux XSec1:		
AuxElev2(m):	0.000	0.000
Aux XSec2:		
Top Width(m):		
Depth(m):		
Bot Width(m):		

Friction Equation:	Average Conveyance
Solution Algorithm:	Automatic
Flow:	Both
Contraction Coef:	0.100
Expansion Coef:	0.300
Entrance Loss Coef:	0.000
Exit Loss Coef:	0.000
Outlet Ctrl Spec:	Use dc or tw
Inlet Ctrl Spec:	Use dn
Stabilizer Option:	None

```
LtSdSlp(h/v):
RtSdSlp(h/v):

-----------------------------------------------------------------------------------------------------------
        Name: chF1                 From Node: u/schF1              Length(m): 217.00
       Group: BASE                   To Node: u/schF2                  Count: 1

               UPSTREAM        DOWNSTREAM                  Friction Equation: Average Conveyance
    Geometry: Trapezoidal      Trapezoidal               Solution Algorithm: Automatic
   Invert(m): 23.000           19.500                                 Flow: Both
 TClpInitZ(m): 3047.695        3047.695                   Contraction Coef: 0.100
  Manning's N: 0.040000        0.040000                     Expansion Coef: 0.300
  Top Clip(m): 0.000           0.000                    Entrance Loss Coef: 0.000
  Bot Clip(m): 0.000           0.000                        Exit Loss Coef: 0.000
    Main XSec:                                            Outlet Ctrl Spec: Use dc or tw
  AuxElev1(m):                                             Inlet Ctrl Spec: Use dn
    Aux XSec1:                                           Stabilizer Option: None
  AuxElev2(m):
    Aux XSec2:
 Top Width(m):
     Depth(m):
 Bot Width(m): 1.400           1.400
 LtSdSlp(h/v): 2.00            2.00
 RtSdSlp(h/v): 2.00            2.00

-----------------------------------------------------------------------------------------------------------
        Name: chF2                 From Node: u/schF2              Length(m): 308.00
       Group: BASE                   To Node: StageArea                Count: 1

               UPSTREAM        DOWNSTREAM                  Friction Equation: Average Conveyance
    Geometry: Trapezoidal      Trapezoidal               Solution Algorithm: Automatic
   Invert(m): 19.500           18.500                                 Flow: Both
 TClpInitZ(m): 3047.695        3047.695                   Contraction Coef: 0.100
  Manning's N: 0.040000        0.040000                     Expansion Coef: 0.300
  Top Clip(m): 0.000           0.000                    Entrance Loss Coef: 0.000
  Bot Clip(m): 0.000           0.000                        Exit Loss Coef: 0.000
    Main XSec:                                            Outlet Ctrl Spec: Use dc or tw
  AuxElev1(m):                                             Inlet Ctrl Spec: Use dn
    Aux XSec1:                                           Stabilizer Option: None
  AuxElev2(m):
    Aux XSec2:
 Top Width(m):
     Depth(m):
 Bot Width(m): 2.900           2.900
 LtSdSlp(h/v): 2.00            2.00
 RtSdSlp(h/v): 2.00            2.00

===========================================================================================
==== Drop Strcutures ======================================================================
===========================================================================================

        Name:                      From Node:                      Length(m): 0.00
       Group: BASE                   To Node:                          Count: 1

               UPSTREAM        DOWNSTREAM                  Friction Equation: Average Conveyance
    Geometry: Circular         Circular                  Solution Algorithm: Automatic
    Span(cm): 0.00             0.00                                   Flow: Both
```

Guayama SMU
Future Condition

```
     Rise(cm): 0.00          0.00                    Entrance Loss Coef: 0.000
    Invert(m): 0.000         0.000                       Exit Loss Coef: 0.000
  Manning's N: 0.000000      0.000000                  Outlet Ctrl Spec: Use dc or tw
 Top Clip(cm): 0.000         0.000                      Inlet Ctrl Spec: Use dn
 Bot Clip(cm): 0.000         0.000                        Solution Incs: 10

Upstream FHWA Inlet Edge Description:
Circular Concrete: Square edge w/ headwall

Downstream FHWA Inlet Edge Description:
Circular Concrete: Square edge w/ headwall


==========================================================================================
==== Weirs ===============================================================================
==========================================================================================

        Name: Orifice42A          From Node: StageArea
       Group: BASE                  To Node: mhp42A
        Flow: Both                    Count: 3
        Type: Vertical: Mavis      Geometry: Circular

                   Span(cm): 60.96
                   Rise(cm): 60.96
                  Invert(m): 15.090
      Control Elevation(m): 15.090
                                          TABLE
          Bottom Clip(cm): 0.000
             Top Clip(cm): 0.000
       Weir Discharge Coef: 2.650
    Orifice Discharge Coef: 0.850


------------------------------------------------------------------------------------------
        Name: Spillwaylake1       From Node: lake
       Group: BASE                  To Node: xs75
        Flow: Both                    Count: 1
        Type: Vertical: Paved      Geometry: Rectangular

                   Span(cm): 900.00
                   Rise(cm): 280.00
                  Invert(m): 40.000
      Control Elevation(m): 40.000
                                          TABLE
          Bottom Clip(cm): 0.000
             Top Clip(cm): 0.000
       Weir Discharge Coef: 2.650
    Orifice Discharge Coef: 0.850


------------------------------------------------------------------------------------------
        Name: Spillwaylake2       From Node: lake
       Group: BASE                  To Node: xs75
        Flow: Both                    Count: 1
        Type: Vertical: Paved      Geometry: Rectangular

                   Span(cm): 600.00
                   Rise(cm): 280.00
                  Invert(m): 40.000
```

```
Control Elevation(m): 40.000
                                        TABLE
     Bottom Clip(cm): 0.000
        Top Clip(cm): 0.000
  Weir Discharge Coef: 2.650
Orifice Discharge Coef: 0.850
```

```
   Name: SPP36                From Node: StageArea
  Group: BASE                   To Node: mhp36
   Flow: Both                     Count: 1
   Type: Horizontal            Geometry: Rectangular

            Span(cm): 940.00
            Rise(cm): 55.00
           Invert(m): 16.980
Control Elevation(m): 16.980
                                        TABLE
     Bottom Clip(cm): 0.000
        Top Clip(cm): 0.000
  Weir Discharge Coef: 2.650
Orifice Discharge Coef: 0.850
```

```
   Name: SPP42A               From Node: StageArea
  Group: BASE                   To Node: mhp42A
   Flow: Both                     Count: 1
   Type: Horizontal            Geometry: Rectangular

            Span(cm): 620.00
            Rise(cm): 55.00
           Invert(m): 16.980
Control Elevation(m): 16.980
                                        TABLE
     Bottom Clip(cm): 0.000
        Top Clip(cm): 0.000
  Weir Discharge Coef: 2.650
Orifice Discharge Coef: 0.850
```

```
   Name: SPP60                From Node: StageArea
  Group: BASE                   To Node: mhp60
   Flow: Both                     Count: 1
   Type: Horizontal            Geometry: Rectangular

            Span(cm): 850.00
            Rise(cm): 55.00
           Invert(m): 16.980
Control Elevation(m): 16.980
                                        TABLE
     Bottom Clip(cm): 0.000
        Top Clip(cm): 0.000
  Weir Discharge Coef: 2.650
Orifice Discharge Coef: 0.850
```

```
---------------------------------------------------------------------------------------------
        Name: SPPNew1              From Node: StageArea
       Group: BASE                  To Node: mhpNew1
        Flow: Both                    Count: 1
        Type: Horizontal           Geometry: Rectangular

                   Span(cm): 758.00
                   Rise(cm): 55.00
                  Invert(m): 16.980
      Control Elevation(m): 16.980
                                                TABLE
           Bottom Clip(cm): 0.000
              Top Clip(cm): 0.000
       Weir Discharge Coef: 2.650
     Orifice Discharge Coef: 0.850


---------------------------------------------------------------------------------------------
        Name: SPPNew2              From Node: StageArea
       Group: BASE                  To Node: mhpNew2
        Flow: Both                    Count: 1
        Type: Horizontal           Geometry: Rectangular

                   Span(cm): 758.00
                   Rise(cm): 55.00
                  Invert(m): 16.980
      Control Elevation(m): 16.980
                                                TABLE
           Bottom Clip(cm): 0.000
              Top Clip(cm): 0.000
       Weir Discharge Coef: 2.650
     Orifice Discharge Coef: 0.850


---------------------------------------------------------------------------------------------
        Name: SPPNew3              From Node: StageArea
       Group: BASE                  To Node: mhpNew3
        Flow: Both                    Count: 1
        Type: Horizontal           Geometry: Rectangular

                   Span(cm): 758.00
                   Rise(cm): 55.00
                  Invert(m): 16.980
      Control Elevation(m): 16.980
                                                TABLE
           Bottom Clip(cm): 0.000
              Top Clip(cm): 0.000
       Weir Discharge Coef: 2.650
     Orifice Discharge Coef: 0.850


---------------------------------------------------------------------------------------------
        Name: weir2                From Node: xs2
       Group: BASE                  To Node: StageArea
        Flow: Both                    Count: 1
        Type: Vertical: Gravel     Geometry: Rectangular

                   Span(cm): 3000.00
                   Rise(cm): 200.00
                  Invert(m): 18.500
```

```
        Control Elevation(m): 18.500
                                                TABLE
             Bottom Clip(cm): 0.000
                Top Clip(cm): 0.000
          Weir Discharge Coef: 2.650
       Orifice Discharge Coef: 0.850


---------------------------------------------------------------------------------------------------
         Name: weir75                 From Node: xs75
        Group: BASE                     To Node: xs8
         Flow: Both                       Count: 1
         Type: Vertical: Gravel       Geometry: Irregular

                          XSec: weir75
                     Invert(m): 31.000
        Control Elevation(m): 31.000
       Struct Opening Dim(m): 3047.70
                                                TABLE
              Bottom Clip(m): 0.000
                 Top Clip(m): 0.000
          Weir Discharge Coef: 2.650
       Orifice Discharge Coef: 0.850


=================================================================================
==== Bridges ====================================================================
=================================================================================

=================================================================================
==== Breaches ===================================================================
=================================================================================


=================================================================================
==== Rating Curves ==============================================================
=================================================================================


=================================================================================
==== Hydrology Simulations ======================================================
=================================================================================

          Name: 100yr24hrfso2
      Filename: H:\Guayama\Guayama SMU\ICPR3\100yr24hrfso2.R32

       Override Defaults: No

Time(hrs)        Print Inc(min)
---------------- ---------------
24.000           5.00

---------------------------------------------------------------------------------------------------
          Name: 2yr24hrfso2
      Filename: H:\Guayama\Guayama SMU\ICPR3\2yr24hrfso2.R32

       Override Defaults: Yes
     Storm Duration(hrs): 24.00
           Rainfall File: Scsii-24
     Rainfall Amount(cm): 12.45
```

Guayama SMU
Future Condition

```
Time(hrs)       Print Inc(min)
--------------- ---------------
24.000          5.00

==========================================================================================
==== Routing Simulations ================================================================
==========================================================================================

        Name: 100yr24hrfso2       Hydrology Sim: 100yr24hrfso2
    Filename: H:\Guayama\Guayama SMU\ICPR3\100yr24hrfso2.I32

     Execute: Yes         Restart: No            Patch: No
 Alternative: No

        Max Delta Z(m): 0.50                     Delta Z Factor: 0.00500
   Time Step Optimizer: 0.000
       Start Time(hrs): 0.000                     End Time(hrs): 24.00
    Min Calc Time(sec): 10.0000              Max Calc Time(sec): 60.0000
       Boundary Stages:                          Boundary Flows:


Time(hrs)       Print Inc(min)
--------------- ---------------
24.000          5.000

Group           Run
--------------- -----
                Yes

------------------------------------------------------------------------------------------
        Name: 2yr24hrfso2         Hydrology Sim: 2yr24hrfso2
    Filename: H:\Guayama\Guayama SMU\ICPR3\2yr24hrfso2.I32

     Execute: No          Restart: No            Patch: No
 Alternative: No

        Max Delta Z(m): 0.50                     Delta Z Factor: 0.00500
   Time Step Optimizer: 0.000
       Start Time(hrs): 0.000                     End Time(hrs): 24.00
    Min Calc Time(sec): 10.0000              Max Calc Time(sec): 60.0000
       Boundary Stages:                          Boundary Flows:


Time(hrs)       Print Inc(min)
--------------- ---------------
24.000          5.000

Group           Run
--------------- -----
BASE            Yes
```

Estado Libre Asociado de Puerto Rico
Departamento de Recursos Naturales y Ambientales

03 MAR 2006

SRA CARMEN TORRES
SECRETARIA
JUNTA DE PLANIFICACIÓN
PO BOX 41119
SAN JUAN PR 00940-1119

Estimada señora Torres:

Complejo Máxima Seguridad
PR-7707
Bo. Jobos, Guayama

06XJ2-CET00-00426 2005-71-0869-JGU-T
O-CE-EJP01-SJ-00175-15022006
2005-71-0869-JGU-T

Hemos evaluado los documentos sometidos en relación con el asunto descrito en el epígrafe. El proyecto bajo consulta consiste en un desarrollo de una institución correccional. El predio objeto de consulta tiene una cabida de 146 cuerdas.

En el Memorial Explicativo se menciona un Plan Maestro que no forma parte de los documentos que fueron referidos a la consideración del Departamento de Recursos Naturales y Ambientales (DRNA) por el Centro Expreso de Trámite. Por otro lado, se indica que la primera fase de este proyecto se llevará a cabo en un predio de 44.62 cuerdas pero no se detalla en qué consiste la misma. Tampoco se identifica la cantidad de fases que conforman este desarrollo institucional ni lo que se proyecta realizar en cada una de ellas.

El DRNA entiende que en vista de la magnitud y ubicación del proyecto propuesto se incluya en el Plan Maestro una descripción detallada de el mismo y que se prepare un documento ambiental conforme lo establece la Ley Núm. 416 de 22 de septiembre de 2004, conocida como Ley Sobre Política Pública Ambiental, Artículo 4B, Inciso 3, particularmente con el Capítulo 5: Declaraciones de Impacto Ambiental (DIA's) del Reglamento de la Junta de Calidad Ambiental para el Proceso de Presentación, Evaluación y Trámite de Documentos Ambientales, en el cual se discuta, pero sin limitarse, los siguientes aspectos:

PO Box 9066601 Fco. de Tarsa Station, San Juan PR 00906-6601
Tel. 721-8774 Fax 723-4594

Sra. Carmen Torres
Complejo Máxima Seguridad
PR-7707
Bo. Jobos, Guayama

06XJ2-CET00-00426
O-CE-EJP01-SJ-00175-15022006
2005-71-0869-JGU-1
Página 2

1) Estudio detallado de flora y fauna
2) Impacto sobre los cuerpos de agua
3) Sistemas ecológicos a impactarse
4) Disposición de aguas pluviales
5) Medidas para el control de erosión y sedimentación
6) Movimiento de tierra y sus impactos
7) Finca receptora del material sobrante, si aplica
8) Información sobre la fuente para el abasto de agua potable, ya que existen problemas de intrusión salina en áreas cercanas al proyecto. Por lo tanto, el suministro de agua debe ser de una fuente superficial y no subterránea. Esta información debe ser certificada por la Autoridad de Acueductos y Alcantarillados.

El Departamento de Recursos Naturales y Ambientales le recomienda a la Junta de Planificación que deje en suspenso esta consulta de ubicación hasta tanto la parte proponente presente la información solicitada y se realice la correspondiente evaluación.

Cordialmente,

Javier J. Rúa
Subsecretario

JJR/JER/GFS

Au d de Acueductos
y Alcantarillados
ESTADO LIBRE ASOCIADO DE PUERTO RICO

119 El Tuque Industrial Park
Ponce, PR 00728-2803
Tel.(787) 651-1076
Fax (787) 812-2529

PROYECTOS PUBLICOS Y PRIVADOS

20 de marzo de 2006

OSVALDO RIVERA CRUZ
PO BOX 9042
SAN JUAN PR 00908

Re: AAA-RS-06-30-04; 2005-71-0869-JPU INSTITUCIÓN SUPERMAXIMA SEGURIDAD, CARR 7707 BO JOBOS COMPLEJO CORRECCIONAL DE GUAYAMA (3000 UNIDADES EQUIVALENTES DE VIVIENDA) PRIMERA FASE DE 500 CELDAS

Estimados señores :

Nos referimos a su solicitud de endoso con la cual somete a nuestra consideración el plano de situación del proyecto de referencia, para que se le informe en cuanto a las facilidades de servicio de agua y alcantarillado sanitario existentes que puedan servir al mismo.

El Área de Operaciones de Guayama no endosa el proyecto debido a que la Planta de Filtración de Agua Potable de Guayama está trabajando sobre la capacidad de su diseño y no hay abasto de agua suficiente para servir unidades adicionales.

Sin embargo se condiciona la conexión de las primeras 500 celdas del proyecto a la primera expansión a la Planta de Filtración de Patillas que se contempla esté terminada y en operación para mediados del año 2008 de no ocurrir dilaciones imprevistas. Las celdas restantes se tomarán en consideración para conexión al sistema de acueducto cuando se realice la segunda expansión a la referida planta sin embargo al momento no hay una fecha de comienzo para la misma.

En cuanto al sistema de alcantarillado de este proyecto deberá conectarse a las instalaciones existentes del Complejo Correccional de Guayama.

Además, el dueño del proyecto deberá aportar a esta Autoridad $ 500.00 por cada unidad equivalente de vivienda, a conectarse y hacer uso del sistema de distribución de agua existente y $500.00 por cada unidad de vivienda a conectarse al sistema de alcantarillado sanitario.

Por otra parte, el dueño del proyecto deberá someter 2 copias avanzadas del plano para la instalación del sistema de distribución de agua y el sistema de alcantarillado sanitario del proyecto para nuestra revisión, antes de proceder con la construcción de las obras.

Al someter los planos finales el dueño deberá cumplir con los siguientes requisitos:

1. Someter el formulario AAA-972 (Certificación del Ingeniero o Arquitecto) o el formulario AAA-972 (Solicitud de Aprobación de Planos de Construcción. Solamente deberá someter uno de los dos formularios, dependiendo si el proyectista es o no especialista.
2. Someter el formulario AAA-881 (Aceptación de Designación)

Si existiera una cañería de la Autoridad de Acueductos y Alcantarillados en uso, a la cual situación lógicamente debiera conectarse el sistema de acueducto y/o alcantarillado sanitario, según fuera el caso del referido proyecto, y dicha cañería fuera inadecuada a los fines de proveer medios eficientes de servicio, o si la misma no existiera, la Autoridad no vendrá obligado en forma alguna a facilitar libre el costo el debido funcionamiento de dichos sistemas.

Estas recomendaciones estarán vigentes por el término de un año, a partir de la fecha de esta comunicación. De no haberse sometido planos para la instalación de dicho(s) sistemas(s), durante este periodo de tiempo, de acuerdo con el Reglamento de Certificación de Planos de Construcción adoptado por esta Autoridad, a nuestra consideración y aprobación, estas recomendaciones quedarán sin efecto y el proyecto deberá someterse nuevamente a nuestra consideración.

Sin otro particular,

Johnny A González Vélez, P.E.
Director Regional Auxiliar de Ingeniería Interino
Oficina Regional Proyectos Públicos Privados
Región Sur

JGV/mfa

CN 078 04479
REV. 1/01

RECEIVED
AUG 02 2006

ESTADO LIBRE ASOCIADO DE PUERTO RICO
AUTORIDAD DE ENERGÍA ELÉCTRICA DE PUERTO RICO

SAN JUAN, PUERTO RICO

www.aeepr.com

APARTADO 364267
CORREO GENERAL
SAN JUAN, PUERTO RICO 00936-4267

15 de marzo de 2006

Carmen Torres Meléndez
Secretaria
Junta de Planificación
San Juan, PR

Estimada señora Torres:

GUAYAMA CARCEL MAXIMA SEGURIDAD GUAYAMA

CARGA (kVA): 3,000.00

ALL NO. 06 0-008

CI NO. 06XJ2-CET00-00426 JPNO. 2005-71-0869-JGU-T

En respuesta a su solicitud de información sobre el proyecto de referencia, le informamos que la Autoridad de Energía Eléctrica (AEE) no tiene objeción a que la Junta apruebe el desarrollo o consulta de ubicación del proyecto siempre que se cumpla con las siguientes condiciones.

1. El dueño del proyecto o su representante tiene que solicitar una evaluación de campo del proyecto a la AEE. En su carta de solicitud tiene que explicar el alcance del proyecto, incluidos la carga total en kVA a instalarse y un programa de trabajo que indique las fechas propuestas a conectar esta carga al sistema eléctrico de la AEE. Junto con la carta de solicitud, se tienen que presentar los planos de ubicación (*location*) y situación (*site*) del proyecto. El dueño del proyecto es responsable de cumplir con todos los requisitos que establezca la AEE para la conexión del proyecto como resultado de la evaluación de campo.

2. El diseñador de la fase eléctrica tiene que ser un ingeniero licenciado y colegiado, autorizado para ejercer su profesión en Puerto Rico. Los planos de diseño elaborados por este profesional tienen que cumplir con los códigos, reglamentos, manuales, estándares y normas aplicables vigentes para los sistemas eléctricos en Puerto Rico.

3. El dueño del proyecto es responsable de cumplir con los requisitos establecidos en el Reglamento de Servidumbres para la Autoridad de Energía Eléctrica, en relación con

   a. Las nuevas servidumbres a establecerse o constituirse como parte del desarrollo del proyecto.

   b. Las servidumbres existentes cuando existan instalaciones eléctricas en el área del proyecto

4. En caso de que el proyecto afecte un sistema de riego, el dueño del proyecto o su representante tiene que solicitar el endoso de la División de Servicios de Riego, Represas y Embalses de la AEE.

Esta carta no es una evaluación final del proyecto.

Sinceramente,

Dámaso Concepción Olivo
Ingeniero Jefe
Oficina Ingeniería de Distribución

"Somos un patrono con igualdad de oportunidades en el empleo y no discriminamos por razón de raza, color, sexo, edad, origen social o nacional, condición social, afiliación política, ideas políticas o religiosas, impedimento físico, mental o ambos o condición de veterano."