APENDICE H

Estudio de Tráfico

Octubre 2010

Declaración de Impacto Ambiental – Preliminar

Planta de Generación de Energía Renovable y Recuperación de Recursos

BARRIO CAMBALACHE DE ARECIBO

EnergyAnswers Arecibo

Traffic Study

Preliminary Environmental Impact Statement

Renewable Power Generation and Resources Recovery Facility

CAMBALACHE - ARECIBO

CSA Group

CSA ARCHITECTS AND ENGINEERS, LLP

1064 Ponce de León Ave., CSA Plaza Suite 500
San Juan, PR 00907-3740
T 787.641.6800 F 787.641.6850
www.csagroup.com

TABLE OF CONTENTS

1 EXECUTIVE SUMMARY 1

2 INTRODUCTION 4

3 PROJECT DESCRIPTION 5

4 CONDITIONS OF THE ROAD NETWORK 8

5 METHODOLOGY 10

6 TRIP GENERATION AND DISTRIBUTION 15

7 OPERATIONAL ANALYSIS 21

8 SUMMARY OF RESULTS 24

9 CONCLUSIONS AND RECOMMENDATIONS 26

10 REFERENCES 28

11 CERTIFICATION 29

LIST OF FIGURES

Figure 1. Aerial View of Puerto Rico 1

Figure 2. Aerial View of Arecibo in reference to San Juan 2

Figure 3. Project Location 2

Figure 4. Project Location Map 3

Figure 5. Northwest View of Project 5

Figure 6. Northwest Street View of Storage Building 6

Figure 7. Schematic Site Plan 7

Figure 8. Arecibo Road Network 9

LIST OF TABLES

Table 1. Level of Service (LOS) Criteria for Intersections 14

Table 2. Trips Generated by the Recovery Facility 15

Table 3. Vehicle Type Distribution 16

Table 4. Intersection #1: PR-2, PR-10 and Juan Rosado Avenue 16
Table 5. Intersection #2: PR-2 and Victor Rojas Avenue..... 17
Table 6. Intersection #3: PR-2 and Access #1 17
Table 7. Intersection #4: PR-2 and Access #2 18
Table 8. Intersection #1: PR-2, PR-10 and Juan Rosado Avenue 18
Table 9. Intersection #2: PR-2 and Victor Rojas Avenue..... 19
Table 10. Intersection #3: PR-2 and Access #1 19
Table 11. Intersection #4: PR-2 and Access #2 20
Table 12. Average delay impact in a signalized intersection..... 21
Table 13. Average delay impact in an unsignalized intersection..... 22
Table 14. Intersection Results: AM Peak Hour 23
Table 15. Intersection Results: PM Peak Hour..... 23
Table 16. Changes in traffic signal times at Intersection #1..... 24
Table 17. Changes in traffic signal times at Intersection #2..... 25
Table 18. Traffic signal times proposed at Intersection #3..... 25

LIST OF APPENDICES

Appendix A: Geometric Data
Appendix B: Traffic Counts
Appendix C: Peak Hour Calculations
Appendix D: Trip Generation
Appendix E: Geometric Conditions 2010
Appendix F: Geometric Conditions 2013
Appendix G: Geometric Conditions 2018
Appendix H: Synchro Runs
Appendix I: Volume Distribution
Appendix J: Summary of Results Table
Appendix K: Photos

1 EXECUTIVE SUMMARY

Energy Answers International requested CSA Group (CSA) to perform a traffic study to determine the vehicular impact that the construction of the new Renewable Power Generation and Resources Recovery Facility will have to the surrounding area. The survey was prepared and organized according to the parameters set in the Department of Transportation and Public Works (DTPW) official document, "Puerto Rico Guidelines for the Preparation of Traffic and Access Operational Studies". The main purpose for the preparation of this technical document was to analyze and determine the existing and future traffic conditions in the area near the development. The proposed project will be built on the parcel of land where the Arecibo Paper Mill was formerly located. The area to be developed is approximately 82 acres. The current entrance to the estate is located on Highway PR-2, km. 73.1 in the Cambalache Ward of the Municipality of Arecibo.

Figure 1. Aerial View of Puerto Rico

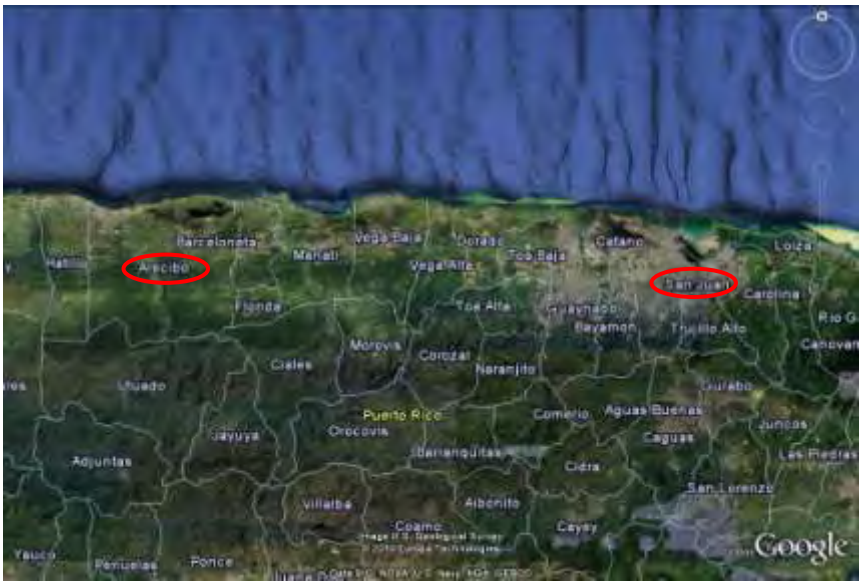

Figure 2. Aerial View of Arecibo in reference to San Juan

Figure 3. Project Location

Figure 4. Project Location Map

The vehicular flow generated by the Renewable Power Generation and Resources Recovery Facility as presented in this study, will not adversely affect the vehicular circulation of the area if changes in pavement markings in order to add right turning lanes and traffic signal reprogramming are done according to the study recommendations. During the project construction and as part of the construction of the proposed accesses to the site, a Maintenance of Traffic (MOT) plan shall be deployed and maintained, according to the DTPW guidelines. Once the project is completed, permanent pavement markings and traffic signing shall be installed according to established DTPW guidelines.

2 INTRODUCTION

Energy Answers International proposes the construction of the new Renewable Power Generation and Resources Recovery Facility. The project will be located on Highway PR-2, km. 73.1 in the Cambalache Ward of the Municipality of Arecibo. This location houses the remains of the former Arecibo Paper Mill.

The area to be developed is approximately 82 acres. The property is bordered on the north and south by property of the Puerto Rico Land Authority, on the west by the Río Grande de Arecibo, and on the east by Highway PR-2. As part of the proposed development, two accesses to the project are proposed, one exclusively for heavy vehicles and the second one for visitor/employee access.

This traffic study will evaluate the project's potential impact to the principal intersections surrounding the site and determine if improvements are needed, as a result of any possible impact the proposed development might have on said intersections.

3 PROJECT DESCRIPTION

The proposed project consists of the construction of a facility where municipal solid waste (MSW) will be used to produce nominal 80 megawatts of electricity and a number of by-products, including Boiler Aggregate™, conditioned fly ash, and recovered ferrous and nonferrous metals. The area to be developed is approximately 82 acres and will include:

- MSW Receiving and Processing Building
- Warehouse
- Processed Refuse Fuel™ (PRF) Storage Building
- Cafeteria, Training, and Lockers Building
- Boiler Building
- Power Block
- Ash Process Building
- Concrete Products Building
- Administration Building

Figure 5. Northwest View of Project

Figure 6. Northwest Street View of Storage Building

Two accesses to the project are proposed: a heavy vehicle access and a visitor/employee access. Each access will have two lanes, an entrance and an exit lane. Deceleration and acceleration lanes are proposed for both accesses in order to provide safety for those entering and exiting the project, as well as reduce conflicts with oncoming traffic on Highway PR-2.

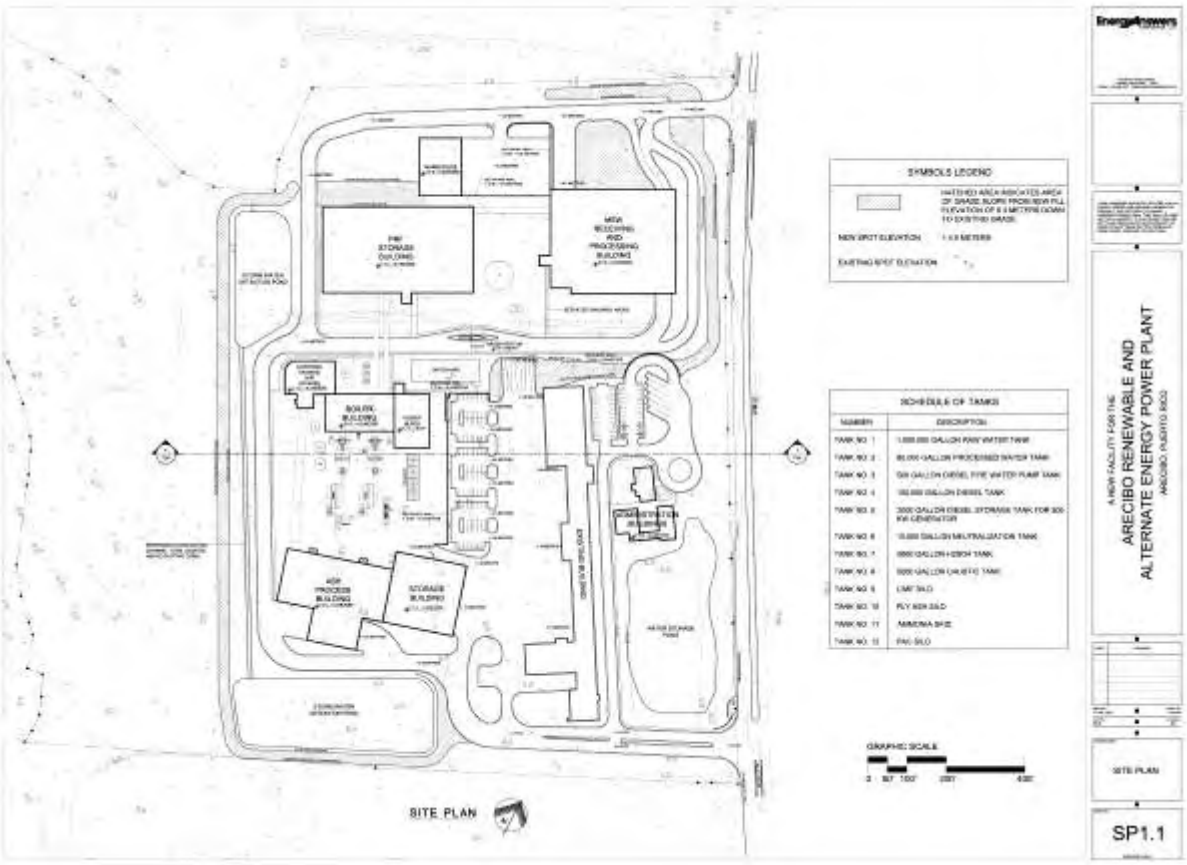

Figure 7. Schematic Site Plan

4 CONDITIONS OF THE ROAD NETWORK

The road network of the Municipality of Arecibo consists of a toll road, and several primary and secondary main highways of Puerto Rico. Among these are Highways PR-22, PR-2, and PR-10, which provide direct access and connect different state roads to the tertiary road network of the island.

4.1 HIGHWAY PR-22

Highway PR-22 is a toll road which begins in the Municipality of San Juan and extends from east to west to the Municipality of Hatillo. In the vicinity of the proposed development it consists of four lanes separated by a grassy median. Along the entire route, there are six alternating one-way toll plazas. Highway PR-22 connects the municipalities of the northern region of Puerto Rico.

4.2 HIGHWAY PR-2

Highway PR-2 is the longest road in the island's network system. It begins in its intersection with Ponce de León Avenue in the Santurce Sector of the Municipality of San Juan, and extends from east to west connecting all the municipalities of the north region. From the Municipality of Aguadilla, it extends from north to south through the western part of the island, and ends in the Municipality of Ponce.

In the area near the project, Highway PR-2 consists of four lanes divided by a concrete median barrier. There are several left turning lanes at the center of the road, protected by median barriers. In the area of this traffic study, there are two intersections with uncoordinated actuated traffic signals.

4.3 HIGHWAY PR-10

Highway PR-10 begins in the Municipality of Ponce and extends from south to north, ending in the Municipality of Arecibo. In the intersection included in this traffic study, it consists of four lanes with no median barrier.

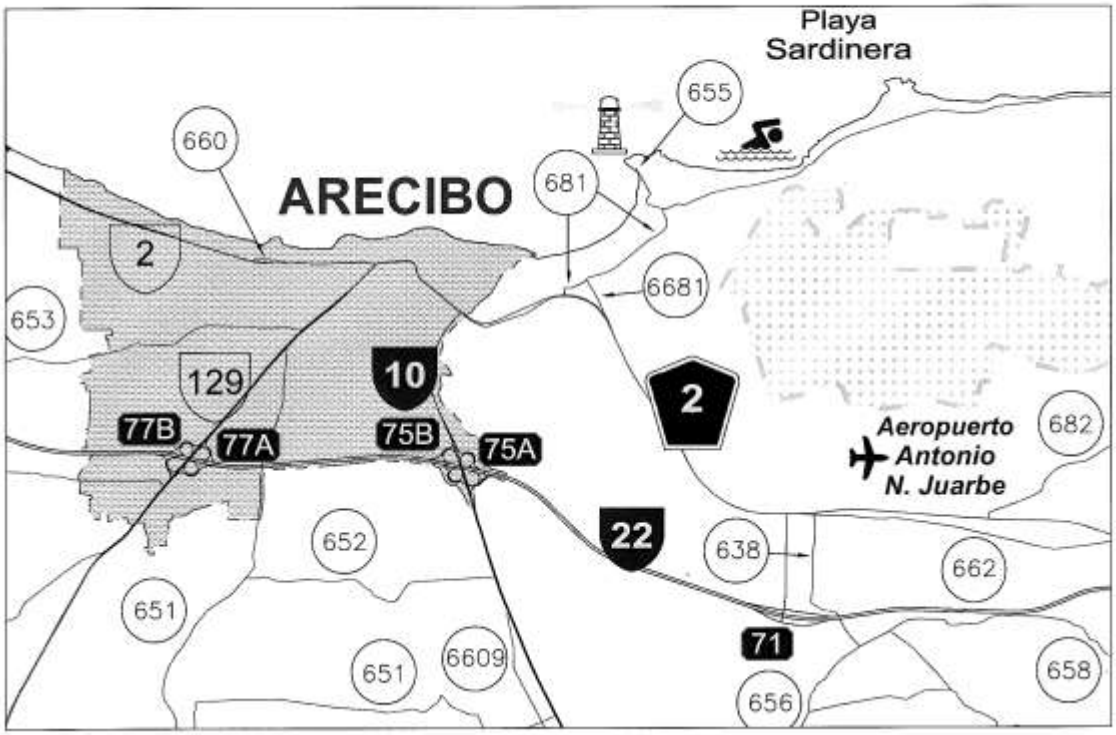

Figure 8. Arecibo Road Network

5 METHODOLOGY

This study assessed the capacity and the operation of the current and future traffic in the area near the proposed site for the new Renewable Power Generation and Resources Recovery Facility to determine if the proposed development will have an impact on the surrounding road network, and if geometric improvements are needed to mitigate any possible impact on the road system. For this purpose, the following procedures were used:

- Several field inspections were made in order to observe traffic patterns in the area. Also, no highway projects were observed under construction in the surrounding area.
- Proposed project developments in the area were searched in the Access Control Office of the Puerto Rico Highway and Transportation Authority (PRHTA), the Puerto Rico Planning Board (PRPB), and the Puerto Rico Regulations and Permits Administration (PRRPA). From the above mentioned research, the following project was identified; the Oceania residential project, located on Highway PR-681 km. 3.2 in the Islote Ward of Arecibo, was found in the PRPB database. A field inspection confirmed that the project was built and is in full operation. No other proposed projects that have approved construction permits or are under construction were found in the area.

  Two proposed projects, located approximately 7 kilometers from the Renewable Power Generation and Resources Recovery Facility, were identified in the PRHTA and the PRPB databases; but, both are still in the permitting process. The Island Cove Hotel and Condo Hotel proposed project will be located in Highway PR-681 km. 7.0 in the Islote Ward of Arecibo. This project is in the process of getting its Environmental Impact Assessment approved. The Corales Apartments proposed project will be located in Highway PR-681 km. 7.6 in the Islote Ward of Arecibo. This project is in the process of celebrating its public hearing.

  In addition, a field inspection was performed and no proposed developments were observed under construction in the surrounding area.
- Geometric data and information about the traffic control devices were gathered at the following intersections and segments:
  - PR-2 with PR-10, Llorens Torres Avenue and Juan Rosado Avenue
  - PR-2 with Victor Rojas Avenue

- Linear traffic count at PR-2 km 73.1

(See Appendix A)

- TeLPEG Engineering, traffic counting specialists, performed traffic data collection on Wednesday, January 27, 2010. Vehicle counting machines collected the data during a 24 hour period. (See Appendix B)
- The morning (AM) and afternoon (PM) peak hours were determined for all intersections being studied. The morning peak hour is from 7:15 AM to 8:15 AM, and the afternoon peak hour is from 2:15 PM to 3:15 PM. (See Appendix C)
- The annual traffic growth rate was analyzed, using the Highway Performance Monitoring System-2008 Classification Log of the Office of Highway Systems of the DTPW. According to this log, the growth rate in 20 years for the intersection of Highways PR-2 and PR-10, and for the intersection of Highway PR-2 and Victor Rojas Avenue, is 54%. The annual traffic growth rate was determined as follows:
    - Growth rate: 54% / 20 years = 2.7% increase/year
- The Institute of Transportation Engineers Trip Generation Manual, 7th edition, and the Microtrans Trip Generation Version 5.0 Software were used to estimate the trips generated by the project. Using the expected traffic data provided by Energy Answers, which included the amount and type of truck trips per day and the number of employees, it was determined that the trip generation description which best matched these parameters was the General Light Industrial project description. The AM and PM peak hour entrances and exits were estimated using this data. (See Appendix D)
- Once the traffic data was collected and projected, the capacity of the intersections was analyzed under the current geometric conditions and the effectiveness of the existing traffic control devices was evaluated. The elements of the road network were studied under the following conditions:
    - Existing Condition (2010) - current vehicular volumes were used for the AM and PM peak hours, according to the information gathered by TeLPEG Engineering. Geometric conditions, times and phase movements in the traffic signal systems were assessed. (See Appendix E)
    - Future Condition Opening Year (2013) – the project is presumed to be operating at full capacity by the year 2013. Vehicular volumes were projected to 2013

using the annual traffic growth rate computed above. The AM and PM peak hour flows were used. Geometric conditions, times and phase movements in the traffic signal systems were evaluated. (See Appendix F)

  - Horizon Condition 5 years after opening (2018) – Vehicular volumes were projected to 2018 using the annual traffic growth rate computed above. The AM and PM peak hour flows were used. Geometric conditions, times and phase movements in the traffic signal systems were evaluated. (See Appendix G)

- The traffic simulations were done using Trafficware's Synchro 6 Signal Timing, Capacity Analysis, and Simulation Software. The results were analyzed taking into account the Levels of Service (LOS) and delays at each intersection for each scenario studied. (see Appendix H)
- Conclusions and recommendations based on the results achieved were presented.
- The LOS was used as the main criteria for the assessment of the operating conditions of the road network.

  This evaluation criterion includes different types of roads and its various components (ramps, intersections, etc.). The LOS "A" represents excellent and ideal traffic conditions, and LOS "F" represents the worst conditions and vehicular congestion in the facilities. The LOS is based on average delays experienced by vehicles crossing intersections, both signalized and unsignalized.

  The categories for each LOS are the following:

  LOS A – Excellent (Free Flow)

  This condition represents free flow accompanied by low volumes of traffic and high speeds. There is little or no restriction in the maneuvers of the driver, who can maintain desired speeds with little or no delay.

  LOS B – Very Good (Reasonably free flow)

  In this condition, operation speeds experience slight restrictions due to the traffic volume. Drivers still have a considerable amount of liberty for choosing their speed and lane used.

LOS C – Good (Stable flow)

Speed and maneuvering become more controlled due to higher traffic volumes. The driver's ability to choose their own speed, change lanes, or pass another driver is not always assured. At LOS C most experienced drivers are comfortable, roads remain safely below but efficiently close to capacity, and posted speed is maintained.

LOS D – Acceptable (Approaching unstable flow)

This LOS approaches unstable flow, with tolerable operation speeds being maintained, although considerably affected by changes in operating conditions. Drivers experience more restrictions in maneuvering and choosing their own speed.

LOS E – Capacity (Unstable flow)

Traffic flow becomes unstable and sudden stops may occur. Vehicular congestion and delays increase considerably. Flow becomes irregular and speed varies rapidly, but rarely reaches the posted limit.

LOS F – Bad (Forced flow)

Flow is forced; every vehicle moves in lockstep with the vehicle in front of it, with frequent slowing required.

Table 1 demonstrates the relationship between LOS and average delays per vehicle in signalized and unsignalized intersections. These delays have two components: the delay while crossing the intersection and the delay while stopping at the intersection.

Table 1. Level of Service (LOS) Criteria for Intersections

	VEHICLE DELAYS (SECONDS)	
LOS	SIGNALIZED INTERSECTION AND ROUNDABOUTS	UNSIGNALIZED (STOP AND YIELD)
A	d < 10	d < 10
B	10 < d < 20	10 < d < 15
C	20 < d < 35	15 < d < 25
D	35 < d < 55	25 < d < 35
E	55 < d < 80	35 < d < 50
F	80 < d	50 < d

The processes used to complete this study are in accordance with the guidelines established by the PRHTA of the DTPW, the design standards of the American Association of State Highway and Transportation Officials (AASHTO), the Transportation Research Board (TRB), and the Institute of Transportation Engineers (ITE) manuals. To complete this traffic study, Trafficware's Synchro 6 Signal Timing, Capacity Analysis, and Simulation Software was used, as well as the TRB's Highway Capacity Manual 2000 (HCM2000) and the ITE traffic assessment guidelines.

6 TRIP GENERATION AND DISTRIBUTION

To determine the trips generated by the new Renewable Power Generation and Resources Recovery Facility, the Trip Generation Manual of the ITE (7th edition) and Microtrans Trip Generation Version 5.0 software were used. Energy Answers provided the expected traffic data, which included the amount and type of truck trips per day and the number of employees (see Appendix I). This traffic data represents the impact throughout one weekday. For the traffic study purpose, the morning and afternoon peak hours were evaluated, since they are the most critical.

The trip generation description which best matched the conditions of the project was the General Light Industrial project description. Table 2 shows the estimated trips generated by the project during the AM and PM peak hours, using the mentioned parameters and the Trip Generation Software.

Table 2. Trips Generated by the Resource Recovery Facility

Peak Hour Volume (AM)		Peak Hour Volume (PM)	
Enter	**Exit**	**Enter**	**Exit**
56	11	14	50

According to the data provided by Energy Answers, it was determined that 30% of the trips generated are cars and 70% of the trips generated are heavy vehicles. Table 3 shows the vehicle type distribution for the trips generated during the AM and PM peak hours.

Table 3. Vehicle Type Distribution

Vehicle Type	Peak Hour Volume (AM)		Peak Hour Volume (PM)	
	Enter	Exit	Enter	Exit
Cars	17	3	4	15
Heavy vehicles	39	8	10	35
Total	56	11	14	50

Access #1, the north entrance, will be used for heavy vehicles only. Energy Answers estimates that 75% of the heavy vehicles will travel from the eastern part of the island, and 25% will travel from the west.

Access #2, the south entrance, will be mainly used as the employee/visitor entrance. For purposes of this traffic study, it was assumed that 50% of the cars will travel from the eastern part of the island, and 50% will travel from the west.

Tables 4 through 11 show the trip generation distributions for the AM and PM peak hours at each intersection.

Table 4. Intersection #1: PR-2, PR-10 and Juan Rosado Avenue

AM Peak Hour Trip Generation Distribution per Movement

	Movement	Cars	Heavy vehicles	Total
PR-2	EB-L			0
	EB-T			0
	EB-R			0
	WB-L	1	2	3
	WB-T			0
	WB-R			0
PR-10	NB-L			0
	NB-T			0
	NB-R	8	10	18
Juan	SB-L			0

	Movement	Cars	Heavy vehicles	Total
Rosado Avenue	SB-T			0
	SB-R			0

Table 5. Intersection #2: PR-2 and Victor Rojas Avenue

AM Peak Hour Trip Generation Distribution per Movement

	Movement	Cars	Heavy vehicles	Total
PR-2	EB-L			0
	EB-T	8	10	18
	WB-T	1	2	3
	WB-R			0
Victor Rojas Avenue	NB-T			0
	NB-R			0

Table 6. Intersection #3: PR-2 and Access #1

AM Peak Hour Trip Generation Distribution per Movement

	Movement	Cars	Heavy vehicles	Total
Access #1	EB-L		2	2
	EB-R		6	6
PR-2	NB-L		29	29
	NB-T	1		1
	SB-T	8		8
	SB-R		10	10

Table 7. Intersection #4: PR-2 and Access #2

AM Peak Hour Trip Generation Distribution per Movement

	Movement	Cars	Heavy vehicles	Total
Access #2	EB-L	1		1
	EB-R	2		2
PR-2	NB-L	9		9
	NB-T		29	29
	SB-T		6	6
	SB-R	8		8

Table 8. Intersection #1: PR-2, PR-10 and Juan Rosado Avenue

PM Peak Hour Trip Generation Distribution per Movement

	Movement	Cars	Heavy vehicles	Total
PR-2	EB-L			0
	EB-T			0
	EB-R			0
	WB-L	7	9	16
	WB-T			0
	WB-R			0
PR-10	NB-L			0
	NB-T			0
	NB-R	2	2	4
Juan Rosado Avenue	SB-L			0
	SB-T			0
	SB-R			0

Table 9. Intersection #2: PR-2 and Victor Rojas Avenue

PM Peak Hour Trip Generation Distribution per Movement

	Movement	Cars	Heavy vehicles	Total
PR-2	EB-L			0
	EB-T	2	2	4
	WB-T	7	9	16
	WB-R			0
Victor Rojas Avenue	NB-T			0
	NB-R			0

Table 10. Intersection #3: PR-2 and Access #1

PM Peak Hour Trip Generation Distribution per Movement

	Movement	Cars	Heavy vehicles	Total
Access #1	EB-L		9	9
	EB-R		26	26
PR-2	NB-L		8	8
	NB-T	7		7
	SB-T	2		2
	SB-R		2	2

Table 11. Intersection #4: PR-2 and Access #2

PM Peak Hour Trip Generation Distribution per Movement

	Movement	Cars	Heavy vehicles	Total
Access #2	EB-L	7		7
	EB-R	8		8
PR-2	NB-L	2		2
	NB-T		8	8
	SB-T		26	26
	SB-R	2		2

7 OPERATIONAL ANALYSIS

The capacity analysis was completed using the HCM2000 guidelines. The traffic simulations were done using Trafficware's Synchro 6 Signal Timing, Capacity Analysis, and Simulation Software. Both signalized intersections (PR-2/PR-10/Juan Rosado Avenue and PR-2/Victor Rojas Avenue) were analyzed and optimized. The current and proposed geometric conditions of Highway PR-2 in front of the project were evaluated.

The area was studied under current conditions (2010), for future conditions in 2013 (the project is presumed to be operating at full capacity by this year), and for the horizon conditions in 2018, 5 years after opening day. Existing geometric conditions were evaluated for the AM and PM peak hours using the existing vehicular flows to establish the current LOS and delays. The current volumes were projected through 2013 and 2018. Using these volumes with the data gathered from the Trip Generation Software, the intersections were evaluated, compared and optimized (if necessary) in order to achieve or maintain adequate LOS and delays, according to the following guidelines established in the "Puerto Rico Guidelines for the Preparation of Traffic Access Operational Studies" of the DTPW, and shown in Tables 12 and 13.

Table 12. Average delay impact in a signalized intersection

Existing LOS	Average additional delay allowed with project
A	20 sec/veh
B	20 sec/veh
C	15 sec/veh
D	15 sec/veh
E	Average delay shall not be $\geq$ 80 sec/veh
F	Automatically provide alternatives

Table 13. Average delay impact in an unsignalized intersection

Existing LOS	Average additional delay allowed with project
A	15 sec/veh
B	15 sec/veh
C	10 sec/veh
D	10 sec/veh
E	Average delay shall not be ≥ 50 sec/veh
F	Automatically provide alternatives

In order not to exceed these allowed additional delays, exclusive right turning lanes were added for the northbound movement at Intersection #1 (PR-2, PR-10, and Juan Rosado Avenue), and for the westbound movement at Intersection #2 (PR-2 and Victor Rojas Avenue). At Intersection #1, the center lane, currently being used exclusively for the through eastbound movement, will be a shared lane for the left turn and through movements. Also at this intersection, the lane widths for the southbound movements were changed to accommodate an additional third lane. Traffic signal times at Intersections #1 and #2 were optimized.

Access #1, a heavy vehicle entrance, was first analyzed in the year 2013 as an unsignalized intersection. The LOS for the intersection was A (Excellent); the LOS for the northbound left turning movement was B (Very Good) and C (Good) for the AM and PM peak hours, respectively. For the vehicles exiting the premises (eastbound movement), delays of 124.2 seconds and 229.6 seconds were observed for both peak hours. However, the maximum queue for this access was two vehicles. This queue does not affect the operations of the proposed project or, more importantly, the traffic flow in Highway PR-2.

As per Energy Answers' request, CSA included as part of the improvements proposed for the project a traffic signal at Access #1, for ease of movement and safety precautions. After analyzing the intersection under this condition, a LOS of C (Good) or better was observed for all movements.

The results for the AM and PM peak hours at each intersection are shown in Tables 14 and 15.

Table 14. Intersection Results: AM Peak Hour

	LOS / Delay (sec)						
Intersection	**Existing (2010)**	**2013**	**Difference (sec)**	**2013 with improvements**	**Difference (sec)**	**2018 with improvements**	**Difference (sec)**
PR-2, PR-10, & Juan Rosado Ave.	E/79.0	F/108.8	-29.80	D/51.6	27.4	D/53.9	25.1
PR-2 & Victor Rojas Ave.	F/185.1	F/230.5	-45.40	B/16.0	169.1	D/36.6	148.5
PR-2 & Access #1	N/A	A/0.4	N/A	B/10.7	N/A	C/28.5	N/A
PR-2 & Access #2	N/A	A/0.0	N/A	A/0.0	N/A	A/0.0	N/A

Table 15. Intersection Results: PM Peak Hour

	LOS / Delay (sec)						
Intersection	**Existing (2010)**	**2013**	**Difference (sec)**	**2013 with improvements**	**Difference (sec)**	**2018 with improvements**	**Difference (sec)**
PR-2, PR-10, & Juan Rosado Ave.	D/45.9	E/58.2	-12.3	D/42.7	3.2	D/50.0	-4.1
PR-2 & Victor Rojas Ave.	E/61.6	F/97.6	-36.0	C/20.9	40.7	C/27.4	34.2
PR-2 & Access #1	N/A	A/2.9	N/A	A/4.3	N/A	A/5.2	N/A
PR-2 & Access #2	N/A	A/0.1	N/A	A/0.1	N/A	A/0.2	N/A

8 SUMMARY OF RESULTS

The results for the AM and PM peak hours for each movement are presented in Appendix J. The analysis was completed using SYNCHRO 6 for the existing and future conditions with the trips generated by the project.

Intersection #1: PR-2, PR-10, and Juan Rosado Avenue

At present, drivers are using the PR-10 shoulder as an exclusive right turning lane. In order to comply with the allowed delays for the northbound right turning movement, an exclusive right turning lane was added in PR-10 during the analysis. Other improvements proposed in this intersection are to change the current use for the center eastbound lane of PR-2, from being an exclusive through movement, to a shared lane for the left turn and through movements. Also, the lane widths for Juan Rosado Avenue have to be reduced in order to accommodate an additional third lane for the right turning southbound movement.

The traffic signal times should be changed for the AM and PM hours, as shown in Table 16.

Table 16. Changes in traffic signal times at Intersection #1

Movement	Existing Times (Green+Yellow+All Red), in seconds	Proposed Times (Green+Yellow+All Red) for AM hours, in seconds	Proposed Times (Green+Yellow+All Red) for PM hours, in seconds
EB-L	24.5	14.0	29.0
EB-T	59.5	31.0	63.5
WB-L	24.5	36.0	39.0
WB-T	59.5	53.0	73.5
NB	44.5	37.0	51.0
SB	24.5	16.0	23.5

Intersection #2: PR-2 and Victor Rojas Avenue

At present, drivers are using the PR-2 westbound shoulder as an exclusive right turning lane. In order to comply with the allowed delays for this movement, an exclusive right turning lane was added in PR-2 during the analysis.

The traffic signal time for the eastbound left turning movement should be changed for the PM hours, as shown in Table 17.

Table 17. Changes in traffic signal times at Intersection #2

Movement	Existing Times (Green+Yellow+All Red), in seconds	Proposed Times (Green+Yellow+All Red) for AM hours, in seconds	Proposed Times (Green+Yellow+All Red) for PM hours, in seconds
EB-L	24.0	24.0	26.0
EB-T	64.0	64.0	64.0
WB	40.0	40.0	40.0
SB	55.0	55.0	55.0

Intersection #3: PR-2 and Access #1

A traffic signal is proposed for this intersection. Table 18 shows the proposed times for the AM and PM hours.

Table 18. Traffic signal times proposed at Intersection #3

Movement	Proposed Times (Green+Yellow+All Red) for AM and PM hours, in seconds
EB	25.0
NB-L	20.0
NB-T	45.0
SB	25.0

Intersection #4: PR-2 and Access #2

Highway PR-2 runs freely at this intersection, except for the northbound left movement. Delays for this movement are not significant.

9 CONCLUSIONS AND RECOMMENDATIONS

This Traffic Study completed in the road network serving the new Renewable Power Generation and Resources Recovery Facility project has concluded that the vehicular flow generated by this project will not adversely affect traffic operations in the area. However, the following recommendations should be considered:

Intersection #1: PR-2, PR-10, and Juan Rosado Avenue

At present, drivers are using the PR-10 shoulder as an exclusive right turning lane. It is recommended that the shoulder pavement marking be erased and a right-only lane with a storage length of 18.3 m (60 ft) be marked. Traffic signs indicating this is a right-only lane should also be installed.

Another improvement proposed at this intersection is to change the current use for the center eastbound lane of PR-2, from being an exclusive through movement, to a shared lane for the left turn and through movements. Traffic signs and pavement marking symbols indicating the new lane uses should be installed.

At Juan Rosado Avenue, the lane widths should be reduced to 10 ft each in order to accommodate an additional third lane for the right turning southbound movement. Existing pavement markings should be erased and new markings should be painted at the final widths. The right turning lane should have a storage length of 18.3 m (60 ft). Traffic signs and pavement marking symbols indicating the new lane uses should be installed.

The traffic signal times should also be changed as previously discussed.

Intersection #2: PR-2 and Victor Rojas Avenue

At present, drivers are using the PR-2 westbound shoulder as an exclusive right turning lane. It is recommended that the shoulder pavement marking be erased and a right-only lane with a

storage length of 122 m (400 ft) be marked. Traffic signs and pavement marking symbols indicating the new lane uses should be installed

The traffic signal times should also be changed as previously discussed.

Intersection #3: PR-2 and Access #1

The project proposes a 122 m (400 ft) deceleration lane and a 107 m (350 ft) acceleration lane to enter and exit the project for southbound traffic. A 107 m (350 ft) left turning lane is proposed for northbound entering traffic. Proper pavement markings and traffic signing should be installed.

A traffic signal system will be installed at this intersection. Signal times were indicated in the Summary of Results section of this study.

Intersection #4: PR-2 and Access #2

The project proposes a 122 m (400 ft) deceleration lane and a 107 m (350 ft) acceleration lane to enter and exit the project for southbound traffic. A 107 m (350 ft) left turning lane is proposed for northbound entering traffic. Proper pavement markings and traffic signing should be installed. Drivers should be alerted with traffic signs that a truck crossing will be encountered ahead.

During the project construction, a Maintenance of Traffic (MOT) plan shall be performed, according to the DTPW guidelines. Once the project is completed, pavement markings and traffic signing shall be placed according to the MUTCD 2009 Edition.

10 REFERENCES

- Highway Capacity Manual 2000. Transportation Research Board, Washington, D.C., 2000.
- A Policy on Geometric Design of Highways and Streets. American Association of State Highway and Transportation Officials, Washington, D.C., 2001.
- Highway Design Manual. Departamento de Transportación y Obras Públicas, San Juan, PR, 1979.
- Transportation and Land Development. Institute of Transportation Engineering, Washington, D.C., 2002.
- http://www.dtop.gov.pr
- http://www.jp.gobierno.pr
- http://www.arpe.org
- Guías para la Preparación de Estudios Operacionales, Departamento de Transportación y Obras Públicas, San Juan, PR, 22 de diciembre de 2004
- Google Earth

11 CERTIFICATION

I, Ruth M. Vargas Vidal, married and resident of Trujillo Alto, Puerto Rico hereby certify that I am a professional member in good standing of the Professional Association of Engineers and Land Surveyors of Puerto Rico, with license PE 16565. I also certify that I have prepared and thoroughly reviewed the Renewable Power Generation and Resources Recovery Facility Traffic Study requested by Energy Answers International. All the information presented in this document is valid to this date.

Ruth M. Vargas Vidal

PE 16565

September 10, 2010

APPENDICES

APPENDIX – A

PR-2 & PR-10 AND JUAN ROSADO AVENUE

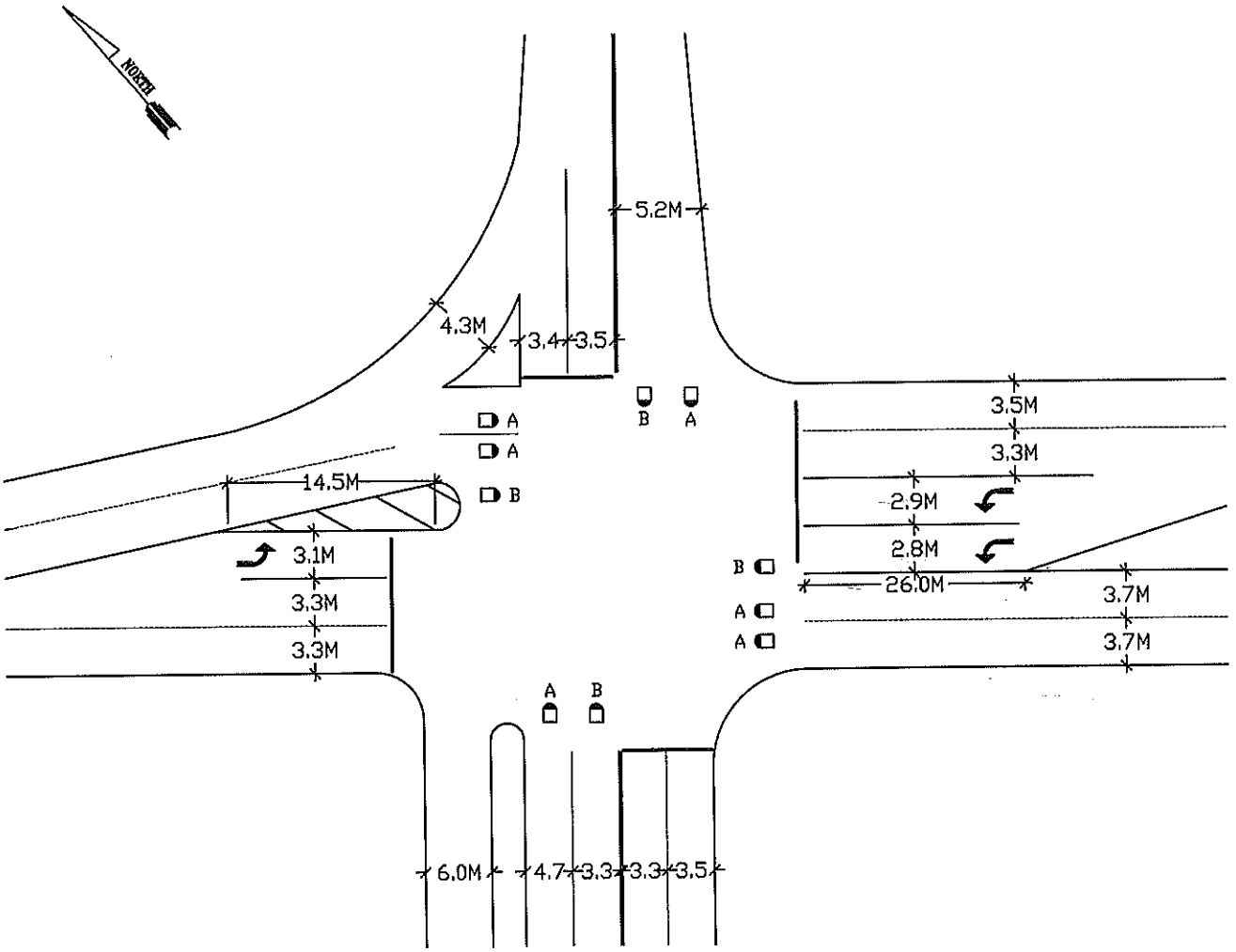

PHASE 1 PHASE 2 PHASE 3 PHASE 4

V–20 S. A–3 S.	V–55 S. A–3 S.	V–40 S. A–3 S.	V–20 S. A–3 S.

ALL RED = 1.5 S.

SIGNAL HEAD MKD–A

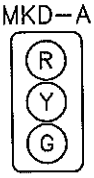

SIGNAL HEAD MKD–B

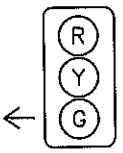

TELPEG ENGINEERING
TRAFFIC COUNTING SPECIALISTS

C: 787-366-1352 E: TELPEG@GMAIL.COM

PR-2 & VICTOR ROJAS AVENUE, ARECIBO, P.R.

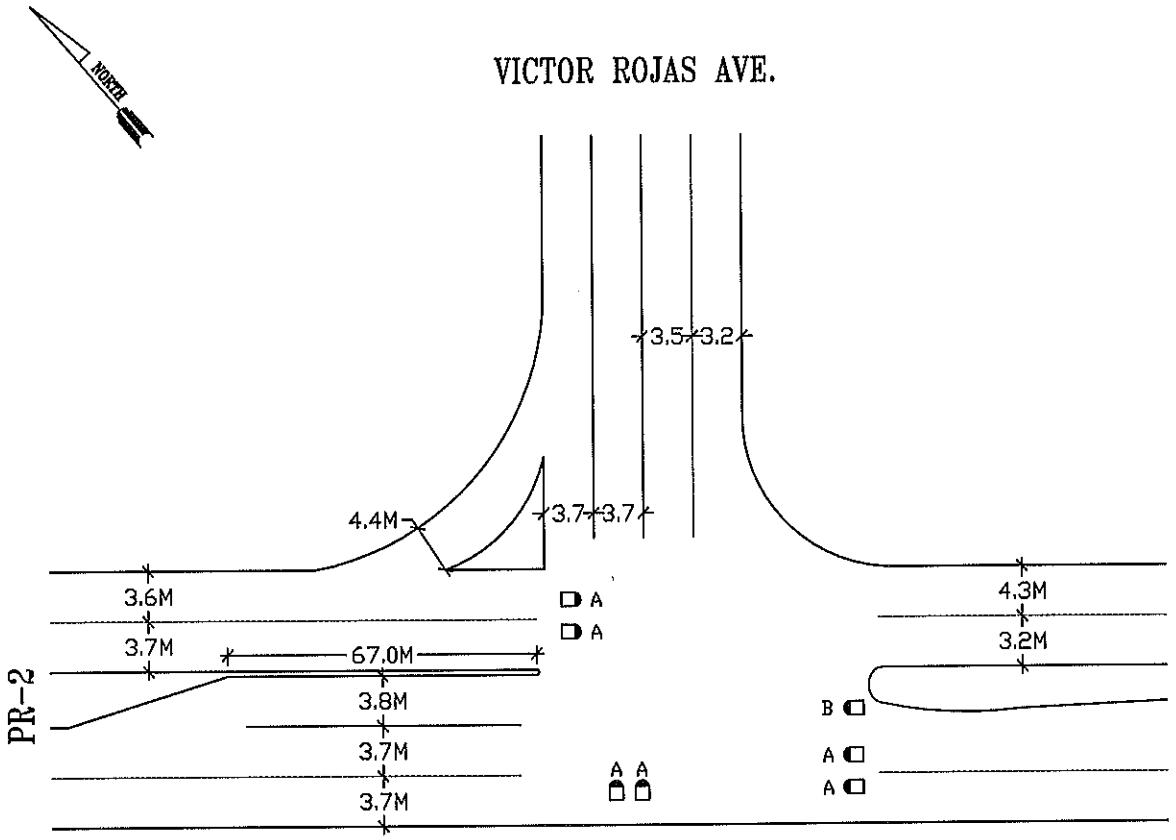

PHASE 1 PHASE 2 PHASE 3

V-20 S. A-2 S.	V-35 S. A-3 S.	V-50 S. A-3 S.

ALL RED = 2 S.

SIGNAL HEAD MKD-A

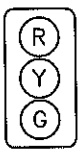

SIGNAL HEAD MKD-B

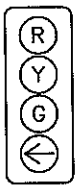

TELPEG ENGINEERING
TRAFFIC COUNTING SPECIALISTS

C: 787-366-1352 E: TELPEG@GMAIL.COM

APPENDIX – B

INTERSECTION: PR-2 & PR-10 AND JUAN ROSADO AVE., ARECIBO, P.R.
DATE: WEDNESDAY, JANUARY 27, 2010

TIME	PR-10			J. ROSADO AVE.			PR-2						TOTAL	TOTAL
PERIOD	NB-L	NB-T	NB-R	SB-L	SB-T	SB-R	EB-L	EB-T	EB-R	WB-L	WB-T	WB-R	15 MIN	60 MIN
12:00 AM	4	1	10	3	3	2	2	12	8	6	10	2	63	
12:15 AM	2	0	11	3	1	1	0	13	0	4	7	1	43	
12:30 AM	6	2	3	1	2	2	2	4	8	3	5	1	39	
12:45 AM	0	0	10	3	1	0	1	12	3	5	7	1	43	188
1:00 AM	1	0	8	2	2	1	0	10	2	3	5	1	35	160
1:15 AM	5	1	4	1	2	1	1	5	2	2	3	1	28	145
1:30 AM	2	1	6	2	2	2	1	8	5	1	2	0	32	138
1:45 AM	1	0	4	1	1	1	1	4	3	2	2	0	20	115
2:00 AM	2	0	6	2	1	0	1	8	3	2	3	1	29	109
2:15 AM	2	1	2	0	2	2	2	2	6	2	4	1	26	107
2:30 AM	2	0	5	1	2	2	2	6	10	3	5	1	39	114
2:45 AM	2	1	2	1	1	0	2	3	9	3	4	1	29	123
3:00 AM	3	1	4	1	1	1	2	5	7	2	4	1	32	126
3:15 AM	1	0	4	1	1	0	5	5	18	3	4	1	43	143
3:30 AM	2	0	5	1	1	1	2	6	6	4	5	1	34	138
3:45 AM	11	4	4	1	2	1	4	5	14	4	5	1	56	165
4:00 AM	7	2	6	2	1	1	8	8	32	6	10	2	85	218
4:15 AM	4	1	13	4	1	1	4	16	18	7	10	2	81	256
4:30 AM	11	4	6	2	3	2	8	7	34	10	14	2	103	325
4:45 AM	14	5	6	2	2	1	6	7	24	16	24	4	111	380
5:00 AM	8	2	16	4	1	0	3	18	13	18	27	4	114	409
5:15 AM	11	3	16	4	3	2	6	19	22	20	31	5	142	470
5:30 AM	11	3	18	5	4	3	7	21	26	30	45	7	180	547
5:45 AM	24	8	12	3	4	4	9	14	34	28	43	7	190	626
6:00 AM	34	11	14	4	3	2	8	16	34	36	55	9	226	738
6:15 AM	52	17	16	4	4	4	6	19	25	60	89	15	311	907
6:30 AM	68	22	22	6	8	6	10	26	38	95	143	24	468	1195
6:45 AM	82	27	20	6	21	18	15	24	62	93	139	23	530	1535
7:00 AM	92	30	28	8	13	10	15	33	62	133	199	33	656	1965
7:15 AM	104	34	35	10	19	16	12	41	47	156	233	39	746	2400
7:30 AM	124	41	37	10	23	18	12	43	46	124	185	31	694	2626
7:45 AM	105	35	39	11	31	26	14	46	56	118	177	29	687	2783
8:00 AM	84	28	47	13	21	18	13	55	54	130	194	32	689	**2816**
8:15 AM	83	28	47	13	18	15	23	55	90	106	158	26	662	2732
8:30 AM	90	30	38	11	28	22	26	45	105	105	158	26	684	2722
8:45 AM	103	34	48	13	33	27	24	57	95	87	131	22	674	2709
9:00 AM	80	27	41	11	26	22	25	48	102	91	136	23	632	2652
9:15 AM	95	32	53	15	31	25	22	62	90	71	107	18	621	2611
9:30 AM	75	25	60	17	28	23	22	71	89	83	124	21	638	2565
9:45 AM	83	27	60	17	30	24	25	71	101	71	106	18	633	2524
10:00 AM	77	25	59	16	28	23	23	70	92	83	124	21	641	2533
10:15 AM	80	26	66	18	26	22	23	78	91	77	115	19	641	2553
10:30 AM	74	24	62	17	24	19	23	72	93	71	107	18	604	2519
10:45 AM	57	19	78	21	25	20	25	92	99	68	101	17	622	2508
11:00 AM	65	21	68	19	32	26	23	80	90	76	113	19	632	2499
11:15 AM	69	23	70	19	31	26	21	82	85	82	122	20	650	2508
11:30 AM	81	27	66	18	28	23	27	77	106	74	110	18	655	2559
11:45 AM	76	25	67	18	40	32	27	79	107	70	104	17	662	2599
12:00 PM	71	24	74	20	27	22	22	87	88	78	118	19	650	2617
12:15 PM	62	21	70	19	26	21	22	82	86	83	124	20	636	2603
12:30 PM	77	25	78	21	31	25	21	92	84	84	126	21	685	2633

Peak Hour

TIME	PR-10			J. ROSADO AVE.			PR-2						TOTAL	TOTAL
PERIOD	NB-L	NB-T	NB-R	SB-L	SB-T	SB-R	EB-L	EB-T	EB-R	WB-L	WB-T	WB-R	15 MIN	60 MIN
12:45 PM	77	26	75	21	30	25	22	88	87	91	136	22	700	2671
1:00 PM	68	22	74	20	20	16	23	87	92	78	117	19	636	2657
1:15 PM	65	21	74	20	26	22	22	86	87	83	125	21	652	2673
1:30 PM	71	23	68	19	36	29	26	80	106	80	121	20	679	2667
1:45 PM	84	28	68	19	30	24	25	80	101	81	121	20	681	2648
2:00 PM	77	25	72	20	29	23	24	85	94	90	134	22	695	2707
2:15 PM	86	28	73	20	32	27	22	86	86	90	134	22	706	2761
2:30 PM	65	21	82	23	37	30	23	97	90	86	129	21	704	2786
2:45 PM	52	17	72	20	29	24	27	85	108	96	144	24	698	2803
3:00 PM	59	20	83	23	27	22	26	98	104	96	145	24	727	**2835**
3:15 PM	86	29	75	21	31	25	24	88	94	84	125	21	703	2832
3:30 PM	53	18	79	22	26	22	21	93	84	76	113	19	626	2754
3:45 PM	59	20	76	21	36	29	22	89	87	74	112	18	643	2699
4:00 PM	33	11	94	26	31	25	20	111	81	68	101	17	618	2590
4:15 PM	56	18	82	22	32	26	24	96	97	74	110	18	655	2542
4:30 PM	39	13	78	22	32	26	23	92	93	75	112	18	623	2539
4:45 PM	54	18	78	21	39	32	31	91	123	70	105	17	679	2575
5:00 PM	50	16	80	22	23	19	18	94	74	61	92	15	564	2521
5:15 PM	29	9	89	25	14	12	12	105	49	61	91	15	511	2377
5:30 PM	34	11	78	22	11	9	16	92	65	60	91	15	504	2258
5:45 PM	32	10	70	19	17	13	13	82	54	42	64	11	427	2006
6:00 PM	27	9	82	23	10	8	6	96	26	50	76	13	426	1868
6:15 PM	32	10	65	18	12	9	12	76	46	43	64	11	398	1755
6:30 PM	31	10	53	15	12	9	13	63	53	42	64	10	375	1626
6:45 PM	35	11	60	17	6	4	11	71	42	42	64	10	373	1572
7:00 PM	35	12	49	13	9	8	17	57	68	39	58	10	375	1521
7:15 PM	44	15	47	13	12	10	12	55	47	35	53	9	352	1475
7:30 PM	30	10	47	13	7	6	4	55	18	31	46	8	275	1375
7:45 PM	28	9	39	11	10	9	13	46	51	26	40	7	289	1291
8:00 PM	17	6	51	14	8	6	6	60	26	26	40	7	267	1183
8:15 PM	24	8	41	11	8	7	12	48	50	23	35	6	273	1104
8:30 PM	17	5	37	10	8	7	9	44	35	18	27	4	221	1050
8:45 PM	15	5	41	11	15	13	8	48	32	20	29	5	242	1003
9:00 PM	13	4	38	11	9	7	8	45	31	24	37	6	233	969
9:15 PM	11	3	34	9	9	7	5	40	22	21	32	5	198	894
9:30 PM	6	2	30	8	6	4	6	36	26	22	34	6	186	859
9:45 PM	8	2	28	8	7	6	12	32	47	18	27	4	199	816
10:00 PM	6	2	26	7	4	4	8	31	33	16	25	4	166	749
10:15 PM	5	1	29	8	6	4	3	34	11	21	32	5	159	710
10:30 PM	6	2	24	7	4	4	5	28	22	17	26	4	149	673
10:45 PM	9	3	29	8	2	2	3	34	10	9	14	2	125	599
11:00 PM	8	3	20	6	4	3	2	24	6	12	17	3	108	541
11:15 PM	2	0	22	6	4	4	0	26	1	14	21	4	104	486
11:30 PM	7	2	16	5	5	4	1	19	2	10	15	2	88	425
11:45 PM	4	1	17	5	2	2	1	20	3	10	14	2	81	381
TOTAL	**3928**	**1287**	**4089**	**1130**	**1466**	**1193**	**1249**	**4814**	**4988**	**4794**	**7189**	**1192**		

Peak Hour

TELPEG ENGINEERING

TRAFFIC COUNTING SPECIALISTS

C: 787-366-1352 E: TELPEG@GMAIL.COM

INTERSECTION: PR-2 & VICTOR ROJAS AVENUE, ARECIBO, P.R.
DATE: WEDNESDAY, JANUARY 27, 2010

TIME PERIOD	V. ROJAS AVE.		PR-2				TOTAL 15 MIN	TOTAL 60 MIN
	SB-L	SB-R	EB-L	EB-T	WB-T	WB-R		
12:00 AM	2	4	8	18	14	8	54	
12:15 AM	3	6	8	20	6	12	55	
12:30 AM	3	6	2	6	3	2	22	
12:45 AM	1	2	8	18	11	0	40	171
1:00 AM	1	3	6	15	6	2	33	150
1:15 AM	3	5	3	8	1	4	24	119
1:30 AM	1	1	5	11	2	0	20	117
1:45 AM	1	1	3	6	3	2	16	93
2:00 AM	2	4	5	11	2	4	28	88
2:15 AM	1	3	1	3	4	7	19	83
2:30 AM	1	3	4	9	6	7	30	93
2:45 AM	2	4	2	4	4	6	22	99
3:00 AM	4	6	3	7	1	4	25	96
3:15 AM	3	5	3	7	3	7	28	105
3:30 AM	4	7	4	9	3	10	37	112
3:45 AM	3	4	3	7	6	10	33	123
4:00 AM	7	11	5	11	7	16	57	155
4:15 AM	6	10	10	23	9	19	77	204
4:30 AM	10	16	4	10	10	24	74	241
4:45 AM	15	25	4	10	19	42	115	323
5:00 AM	18	31	12	27	18	26	132	398
5:15 AM	13	21	12	28	35	39	148	469
5:30 AM	20	34	13	31	48	67	213	608
5:45 AM	21	37	9	20	41	55	183	676
6:00 AM	24	40	10	24	60	57	215	759
6:15 AM	35	60	12	28	104	103	342	953
6:30 AM	39	67	17	39	195	238	595	1335
6:45 AM	58	100	15	35	155	197	560	1712
7:00 AM	54	93	21	50	272	239	729	2226
7:15 AM	50	84	26	62	344	290	856	2740
7:30 AM	49	84	28	64	256	166	647	2792
7:45 AM	44	74	29	68	250	173	638	2870
8:00 AM	44	74	35	82	282	228	745	**2886**
8:15 AM	44	74	35	82	216	179	630	2660
8:30 AM	43	73	29	67	216	191	619	2632
8:45 AM	59	71	36	85	169	134	554	2548
9:00 AM	46	56	31	71	194	172	570	2373
9:15 AM	64	78	40	92	118	138	530	2273
9:30 AM	67	82	45	105	146	122	567	2221
9:45 AM	59	73	45	106	122	101	506	2173
10:00 AM	68	62	44	104	166	153	597	2200
10:15 AM	66	61	50	116	150	121	564	2234
10:30 AM	79	73	46	108	123	128	557	2224
10:45 AM	82	76	59	136	110	115	578	2296
11:00 AM	79	72	51	119	136	114	571	2270
11:15 AM	92	84	52	122	140	124	614	2320
11:30 AM	86	80	49	115	122	125	577	2340
11:45 AM	76	70	50	118	121	92	527	2289
12:00 PM	96	78	56	129	137	126	622	2340
12:15 PM	88	72	52	122	155	121	610	2336
12:30 PM	82	67	59	136	164	127	635	2394

Peak Hour

TIME PERIOD	V. ROJAS AVE.		PR-2				TOTAL 15 MIN	TOTAL 60 MIN
	SB-L	SB-R	EB-L	EB-T	WB-T	WB-R		
12:45 PM	86	71	56	132	178	146	669	2536
1:00 PM	92	76	56	130	138	100	592	2506
1:15 PM	79	64	55	129	165	103	595	2491
1:30 PM	101	64	51	120	157	120	613	2469
1:45 PM	94	60	51	119	162	109	595	2395
2:00 PM	91	58	54	126	188	127	644	2447
2:15 PM	89	57	55	127	189	149	666	2518
2:30 PM	109	69	62	144	167	107	658	2563
2:45 PM	87	55	54	126	209	108	639	2607
3:00 PM	83	53	62	146	212	163	719	**2682**
3:15 PM	104	66	56	132	164	135	657	2673
3:30 PM	94	60	59	139	148	82	582	2597
3:45 PM	90	58	57	133	146	109	593	2551
4:00 PM	107	69	71	165	117	121	650	2482
4:15 PM	85	55	61	143	147	118	609	2434
4:30 PM	99	63	59	137	142	147	647	2499
4:45 PM	100	64	58	136	128	131	617	2523
5:00 PM	81	51	60	139	117	70	518	2391
5:15 PM	77	49	67	156	118	110	577	2359
5:30 PM	86	55	59	137	111	124	572	2284
5:45 PM	71	45	53	122	72	65	428	2095
6:00 PM	76	49	62	143	90	77	497	2074
6:15 PM	61	39	49	113	79	70	411	1908
6:30 PM	79	50	40	93	66	75	403	1739
6:45 PM	80	51	45	105	65	69	415	1726
7:00 PM	62	39	37	85	68	57	348	1577
7:15 PM	45	28	35	82	69	71	330	1496
7:30 PM	58	37	35	83	48	51	312	1405
7:45 PM	54	35	29	69	38	53	278	1268
8:00 PM	61	39	38	90	34	53	315	1235
8:15 PM	55	35	31	71	29	54	275	1180
8:30 PM	48	30	28	65	19	38	228	1096
8:45 PM	46	30	31	71	24	18	220	1038
9:00 PM	34	22	29	67	45	42	239	962
9:15 PM	39	25	26	60	33	50	233	920
9:30 PM	30	28	23	53	34	34	202	894
9:45 PM	21	20	21	48	29	17	156	830
10:00 PM	7	6	20	46	39	17	135	726
10:15 PM	9	9	22	51	49	40	180	673
10:30 PM	9	12	18	42	35	26	142	613
10:45 PM	12	14	22	50	11	14	123	580
11:00 PM	10	16	15	35	16	18	110	555
11:15 PM	8	12	17	38	27	25	127	502
11:30 PM	8	12	12	29	15	13	89	449
11:45 PM	5	8	13	30	18	25	99	425
TOTAL	**4640**	**4135**	**3073**	**7161**	**9040**	**7898**		

Peak Hour

TELPEG ENGINEERING

TRAFFIC COUNTING SPECIALISTS

C: 787-366-1352 E: TELPEG@GMAIL.COM

LOCATION: PR-2, EAST OF VICTOR ROSA AVENUE, ARECIBO
DATE: WEDNESDAY, JANUARY 27, 2010

TIME PERIOD	PR-2		TOTAL 15 MIN	TOTAL 60 MIN
	EB	WB		
12:00 AM	20	23	43	
12:15 AM	23	19	42	
12:30 AM	9	5	14	
12:45 AM	19	12	31	130
1:00 AM	16	8	24	111
1:15 AM	12	5	17	86
1:30 AM	12	2	14	86
1:45 AM	7	5	12	67
2:00 AM	13	6	19	62
2:15 AM	4	12	16	61
2:30 AM	10	14	24	71
2:45 AM	6	11	17	76
3:00 AM	11	5	16	73
3:15 AM	10	11	21	78
3:30 AM	13	14	27	81
3:45 AM	10	17	27	91
4:00 AM	18	24	42	117
4:15 AM	29	29	58	154
4:30 AM	20	36	56	183
4:45 AM	25	64	89	245
5:00 AM	44	46	90	293
5:15 AM	41	78	119	354
5:30 AM	51	121	172	470
5:45 AM	41	101	142	523
6:00 AM	48	123	171	604
6:15 AM	63	217	280	765
6:30 AM	78	455	533	1126
6:45 AM	93	370	463	1447
7:00 AM	104	537	641	1917
7:15 AM	112	666	778	2415
7:30 AM	113	443	556	2438
7:45 AM	112	444	556	2531
8:00 AM	126	536	662	**2552**
8:15 AM	126	415	541	2315
8:30 AM	110	427	537	2296
8:45 AM	144	318	462	2202
9:00 AM	117	384	501	2041
9:15 AM	156	269	425	1925
9:30 AM	172	281	453	1841
9:45 AM	165	234	399	1778
10:00 AM	172	335	507	1784
10:15 AM	182	285	467	1826
10:30 AM	187	264	451	1824
10:45 AM	217	236	453	1878
11:00 AM	198	263	461	1832
11:15 AM	214	277	491	1856
11:30 AM	201	259	460	1865
11:45 AM	195	224	419	1831
12:00 PM	225	276	501	1871
12:15 PM	210	290	500	1880

Peak Hour

12:30 PM	218	306	524	1944
12:45 PM	218	340	558	2083
1:00 PM	222	250	472	2054
1:15 PM	208	281	489	2043
1:30 PM	221	291	512	2031
1:45 PM	213	285	498	1971
2:00 PM	217	331	548	2047
2:15 PM	216	355	571	2129
2:30 PM	253	288	541	2158
2:45 PM	218	333	551	2211
3:00 PM	229	394	623	**2286**
3:15 PM	236	314	550	2265
3:30 PM	233	242	475	2199
3:45 PM	223	268	491	2139
4:00 PM	272	250	522	2038
4:15 PM	228	278	506	1994
4:30 PM	236	303	539	2058
4:45 PM	236	272	508	2075
5:00 PM	220	196	416	1969
5:15 PM	233	239	472	1935
5:30 PM	223	247	470	1866
5:45 PM	193	144	337	1695
6:00 PM	219	175	394	1673
6:15 PM	176	156	332	1533
6:30 PM	172	148	320	1383
6:45 PM	185	141	326	1372
7:00 PM	147	131	278	1256
7:15 PM	127	147	274	1198
7:30 PM	141	104	245	1123
7:45 PM	123	96	219	1016
8:00 PM	151	91	242	980
8:15 PM	126	87	213	919
8:30 PM	113	60	173	847
8:45 PM	117	44	161	789
9:00 PM	101	91	192	739
9:15 PM	99	87	186	712
9:30 PM	83	71	154	693
9:45 PM	69	48	117	649
10:00 PM	53	59	112	569
10:15 PM	60	93	153	536
10:30 PM	51	64	115	497
10:45 PM	62	26	88	468
11:00 PM	45	36	81	437
11:15 PM	46	55	101	385
11:30 PM	37	29	66	336
11:45 PM	38	45	83	331
TOTAL	**11811**	**17787**		

Peak Hour

TELPEG ENGINEERING

TRAFFIC COUNTING SPECIALISTS

C: 787-366-1352 E: TELPEG@GMAIL.COM

APPENDIX – C

DATA SUMMARY

INTERSECTION: PR-2 & PR-10 AND JUAN ROSADO AVE., ARECIBO, P.R.
DATE: WEDNESDAY, JANUARY 27, 2010

PEAK HOUR (A.M.)	PR-10			JUAN ROSADO AVE.			PR-2						TOTAL 15 MIN
	NB-L	NB-T	NB-R	SB-L	SB-T	SB-R	EB-L	EB-T	EB-R	WB-L	WB-T	WB-R	
7:15 - 7:30 AM	104	34	35	10	19	16	12	41	47	156	233	39	746
7:30 - 7:45 AM	124	41	37	10	23	18	12	43	46	124	185	31	694
7:45 - 8:00 AM	105	35	39	11	31	26	14	46	56	118	177	29	687
8:00 - 8:15 AM	84	28	47	13	21	18	13	55	54	130	194	32	689
PEAK HOUR VOLUME (A.M.)	417	138	158	44	94	78	51	185	203	528	789	131	
PEAK HOUR FACTOR (A.M.)	0.84	0.84	0.84	0.85	0.76	0.75	0.91	0.84	0.91	0.85	0.85	0.84	

PEAK HOUR (P.M.)	PR-10			JUAN ROSADO AVE.			PR-2						TOTAL 15 MIN
	NB-L	NB-T	NB-R	SB-L	SB-T	SB-R	EB-L	EB-T	EB-R	WB-L	WB-T	WB-R	
2:15 - 2:30 PM	86	28	73	20	32	27	22	86	86	90	134	22	706
2:30 - 2:45 PM	65	21	82	23	37	30	23	97	90	86	129	21	704
2:45 - 3:00 PM	52	17	72	20	29	24	27	85	108	96	144	24	698
3:00 - 3:15 PM	59	20	83	23	27	22	26	98	104	96	145	24	727
PEAK HOUR VOLUME (P.M.)	262	86	310	86	125	103	98	366	388	368	552	91	
PEAK HOUR FACTOR (P.M.)	0.76	0.77	0.93	0.93	0.84	0.86	0.91	0.93	0.90	0.96	0.95	0.95	

24 HOUR VOLUME	PR-10			JUAN ROSADO AVE.			PR-2					
	NB-L	NB-T	NB-R	SB-L	SB-T	SB-R	EB-L	EB-T	EB-R	WB-L	WB-T	WB-R
	3928	1287	4089	1130	1466	1193	1249	4814	4988	4794	7189	1192

TELPEG ENGINEERING
TRAFFIC COUNTING SPECIALISTS

C: 787-366-1352 E: TELPEG@GMAIL.COM

DATA SUMMARY

INTERSECTION: PR-2 & VICTOR ROJAS AVENUE, ARECIBO, P.R.
DATE: WEDNESDAY, JANUARY 27, 2010

PEAK HOUR (A.M.)	V. ROJAS AVE.		PR-2				TOTAL 15 MIN
	SB-L	SB-R	EB-L	EB-T	WB-T	WB-R	
7:15 - 7:30 AM	50	84	26	62	344	290	**856**
7:30 - 7:45 AM	49	84	28	64	256	166	**647**
7:45 - 8:00 AM	44	74	29	68	250	173	**638**
8:00 - 8:15 AM	44	74	35	82	282	228	**745**
PEAK HOUR VOLUME (A.M.)	**187**	**316**	**118**	**276**	**1132**	**857**	
PEAK HOUR FACTOR (A.M.)	**0.94**	**0.94**	**0.84**	**0.84**	**0.82**	**0.74**	

PEAK HOUR (P.M.)	V. ROJAS AVE.		PR-2				TOTAL 15 MIN
	SB-L	SB-R	EB-L	EB-T	WB-T	WB-R	
2:15 - 2:30 PM	89	57	55	127	189	149	**666**
2:30 - 2:45 PM	109	69	62	144	167	107	**658**
2:45 - 3:00 PM	87	55	54	126	209	108	**639**
3:00 - 3:15 PM	83	53	62	146	212	163	**719**
PEAK HOUR VOLUME (P.M.)	**368**	**234**	**233**	**543**	**777**	**527**	
PEAK HOUR FACTOR (P.M.)	**0.84**	**0.85**	**0.94**	**0.93**	**0.92**	**0.81**	

24 HOUR VOLUME	V. ROJAS AVE.		PR-2			
	SB-L	SB-R	EB-L	EB-T	WB-T	WB-R
	4640	**4135**	**3073**	**7161**	**9040**	**7898**

TELPEG ENGINEERING
TRAFFIC COUNTING SPECIALISTS

C: 787-366-1352 E: TELPEG@GMAIL.COM

DATA SUMMARY

LOCATION: PR-2, EAST OF VICTOR ROJAS AVENUE
DATE: WEDNESDAY, JANUARY 27, 2010

PEAK HOUR (A.M.)	PR-2		TOTAL 15 MIN
	EB	WB	
7:15 - 7:30 AM	112	666	778
7:30 - 7:45 AM	113	443	556
7:45 - 8:00 AM	112	444	556
8:00 - 8:15 AM	126	536	662
PEAK HOUR VOLUME (A.M.)	463	2089	
PEAK HOUR FACTOR (A.M.)	0.92	0.78	

PEAK HOUR (P.M.)	PR-2		TOTAL 15 MIN
	EB	WB	
2:15 - 2:30 PM	216	355	571
2:30 - 2:45 PM	253	288	541
2:45 - 3:00 PM	218	333	551
3:00 - 3:15 PM	229	394	623
PEAK HOUR VOLUME (P.M.)	916	1370	
PEAK HOUR FACTOR (P.M.)	0.91	0.87	

24 HOUR VOLUME	PR-2	
	EB	WB
	11811	17787

APPENDIX – D

Arecibo
Summary of Trip Generation Calculation
For 150 Employees of General Light Industrial
March 20, 2010

	Average Rate	Standard Deviation	Adjustment Factor	Driveway Volume
Avg. Weekday 2-Way Volume	3.02	1.86	1.00	453
7-9 AM Peak Hour Enter	0.37	0.00	1.00	56
7-9 AM Peak Hour Exit	0.07	0.00	1.00	11
7-9 AM Peak Hour Total	0.44	0.69	1.00	66
4-6 PM Peak Hour Enter	0.09	0.00	1.00	14
4-6 PM Peak Hour Exit	0.33	0.00	1.00	50
4-6 PM Peak Hour Total	0.42	0.67	1.00	63
Saturday 2-Way Volume	0.48	0.72	1.00	72
Saturday Peak Hour Enter	0.02	0.00	1.00	3
Saturday Peak Hour Exit	0.03	0.00	1.00	5
Saturday Peak Hour Total	0.05	0.23	1.00	8

Note: A zero indicates no data available.
Source: Institute of Transportation Engineers
Trip Generation, 7th Edition, 2003.

TRIP GENERATION BY MICROTRANS

Arecibo
Summary of Trip Generation Calculation
For 150 Employees of General Light Industrial
March 20, 2010

	Average Rate	Standard Deviation	Adjustment Factor	Driveway Volume
Avg. Weekday 2-Way Volume	3.02	1.86	1.00	453
7-9 AM Peak Hour Enter	0.37	0.00	1.00	56
7-9 AM Peak Hour Exit	0.07	0.00	1.00	11
7-9 AM Peak Hour Total	0.44	0.69	1.00	66
4-6 PM Peak Hour Enter	0.09	0.00	1.00	14
4-6 PM Peak Hour Exit	0.33	0.00	1.00	50
4-6 PM Peak Hour Total	0.42	0.67	1.00	63
AM Pk Hr, Generator, Enter	0.42	0.00	1.00	63
AM Pk Hr, Generator, Exit	0.06	0.00	1.00	9
AM Pk Hr, Generator, Total	0.48	0.72	1.00	72
PM Pk Hr, Generator, Enter	0.15	0.00	1.00	23
PM Pk Hr, Generator, Exit	0.36	0.00	1.00	54
PM Pk Hr, Generator, Total	0.51	0.75	1.00	77
Saturday 2-Way Volume	0.48	0.72	1.00	72
Saturday Peak Hour Enter	0.02	0.00	1.00	3
Saturday Peak Hour Exit	0.03	0.00	1.00	5
Saturday Peak Hour Total	0.05	0.23	1.00	8
Sunday 2-Way Volume	0.26	0.60	1.00	39
Sunday Peak Hour Enter	0.02	0.00	1.00	3
Sunday Peak Hour Exit	0.02	0.00	1.00	3
Sunday Peak Hour Total	0.04	0.20	1.00	6

Note: A zero indicates no data available.
Source: Institute of Transportation Engineers
Trip Generation, 7th Edition, 2003.

TRIP GENERATION BY MICROTRANS

Arecibo
Summary of Trip Generation Rates
For 150 Employees of General Light Industrial
March 20, 2010

	Avg. Trip Rate	Min. Trip Rate	Max. Trip Rate	Std. Dev.	No. of Studies
Avg. Weekday 2-Way Volume	3.02	1.53	4.48	1.86	18
7-9 AM Peak Hour Enter	0.37	0.07	0.85	0.00	0
7-9 AM Peak Hour Exit	0.07	0.01	0.17	0.00	0
7-9 AM Peak Hour Total	0.44	0.08	1.02	0.69	21
4-6 PM Peak Hour Enter	0.09	0.01	0.20	0.00	0
4-6 PM Peak Hour Exit	0.33	0.03	0.75	0.00	0
4-6 PM Peak Hour Total	0.42	0.04	0.95	0.67	19
AM Pk Hr, Generator, Enter	0.42	0.22	0.89	0.00	0
AM Pk Hr, Generator, Exit	0.06	0.03	0.13	0.00	0
AM Pk Hr, Generator, Total	0.48	0.25	1.02	0.72	21
PM Pk Hr, Generator, Enter	0.15	0.10	0.34	0.00	0
PM Pk Hr, Generator, Exit	0.36	0.26	0.84	0.00	0
PM Pk Hr, Generator, Total	0.51	0.36	1.18	0.75	21
Saturday 2-Way Volume	0.48	0.29	1.32	0.72	6
Saturday Peak Hour Enter	0.02	0.02	0.10	0.00	0
Saturday Peak Hour Exit	0.03	0.02	0.11	0.00	0
Saturday Peak Hour Total	0.05	0.04	0.21	0.23	5
Sunday 2-Way Volume	0.26	0.12	2.09	0.60	4
Sunday Peak Hour Enter	0.02	0.01	0.14	0.00	0
Sunday Peak Hour Exit	0.02	0.01	0.15	0.00	0
Sunday Peak Hour Total	0.04	0.02	0.29	0.20	4

Note: A zero indicates no data available.
Source: Institute of Transportation Engineers
Trip Generation, 7th Edition, 2003.

TRIP GENERATION BY MICROTRANS

APPENDIX – E

INTERSECTION #1: PR-2 & PR-10 AND JUAN ROSADO AVENUE
Existing AM Peak Hour Volumes and Peak Hour Factors

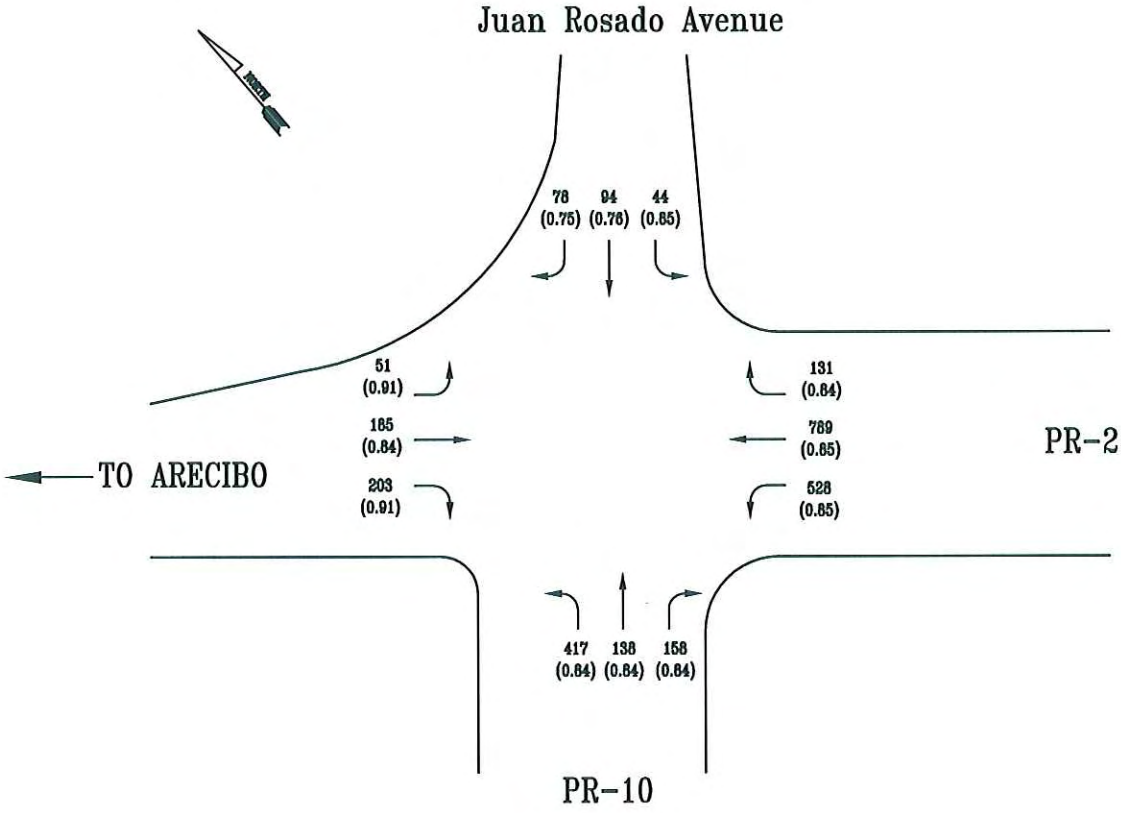

INTERSECTION #1: PR-2 & PR-10 AND JUAN ROSADO AVENUE
Existing PM Peak Hour Volumes and Peak Hour Factors

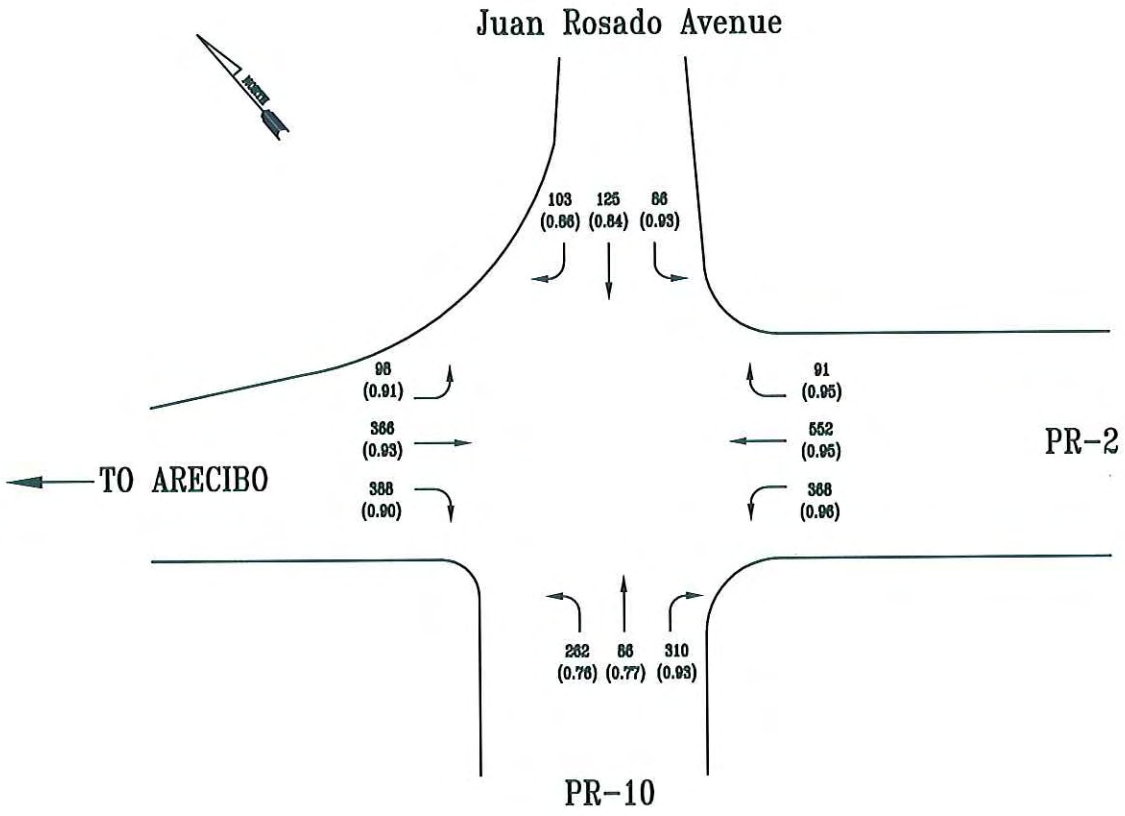

INTERSECTION #2: PR-2 & VICTOR ROJAS AVENUE
Existing AM Peak Hour Volumes and Peak Hour Factors

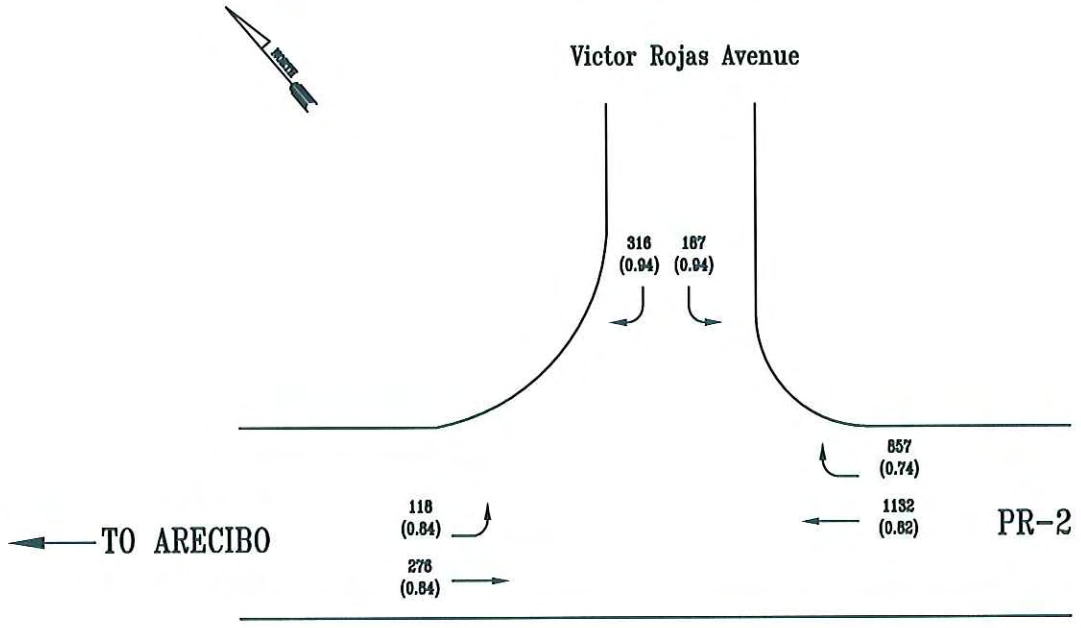

INTERSECTION #2: PR-2 & VICTOR ROJAS AVENUE
Existing PM Peak Hour Volumes and Peak Hour Factors

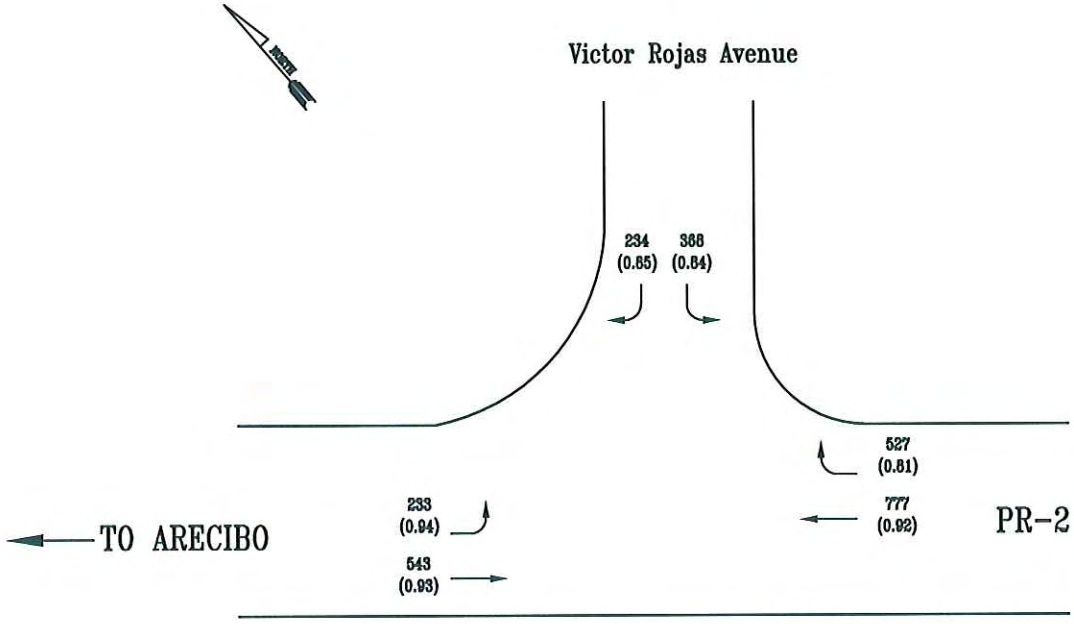

PR-2 KM. 73.1

Existing AM Peak Hour Volumes and Peak Hour Factors

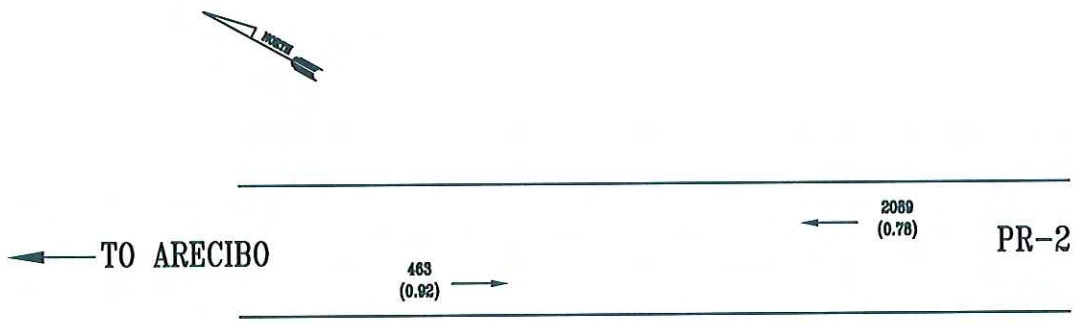

PR-2 KM. 73.1

Existing PM Peak Hour Volumes and Peak Hour Factors

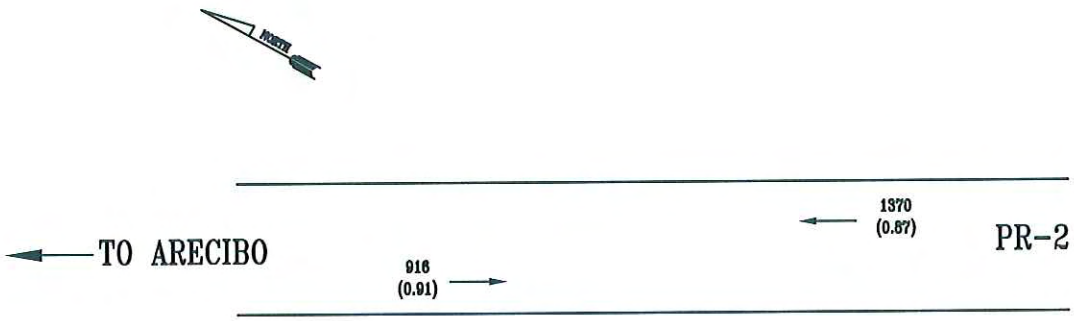

APPENDIX – F

INTERSECTION #1: PR-2 & PR-10 AND JUAN ROSADO AVENUE
2013 AM Peak Hour Volumes

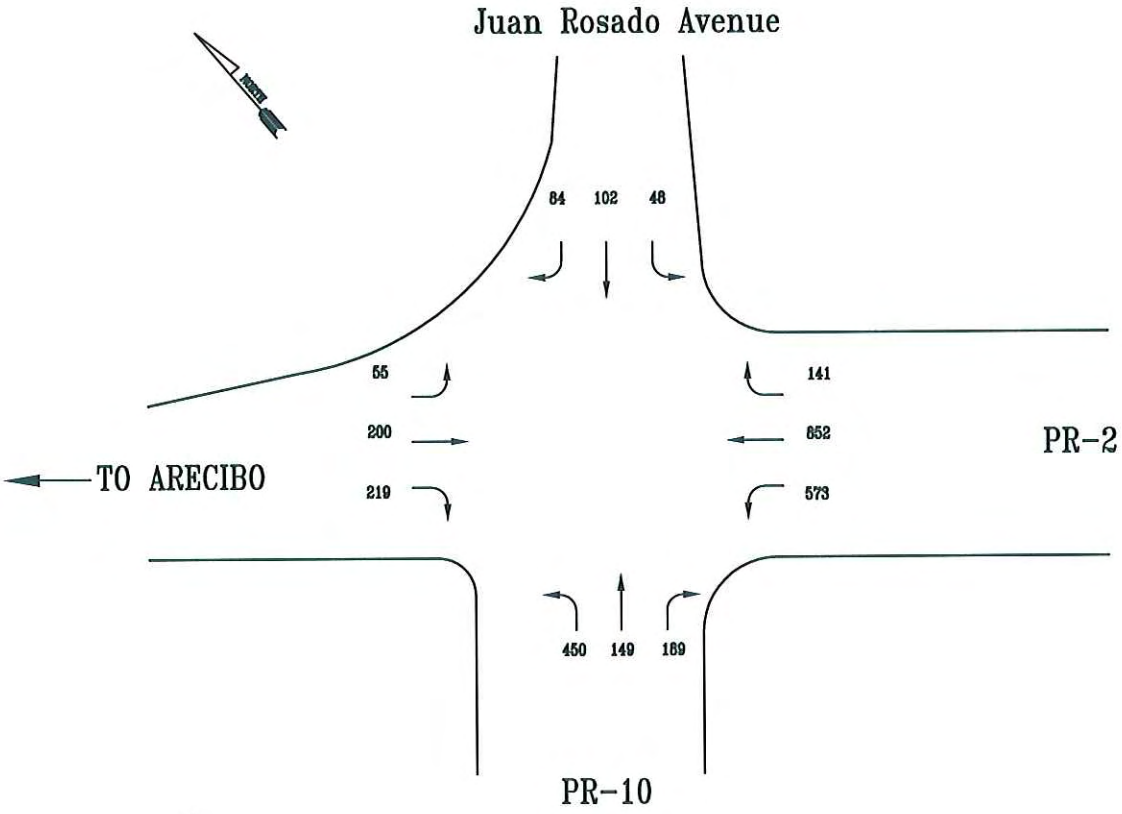

INTERSECTION #1: PR-2 & PR-10 AND JUAN ROSADO AVENUE
2013 PM Peak Hour Volumes

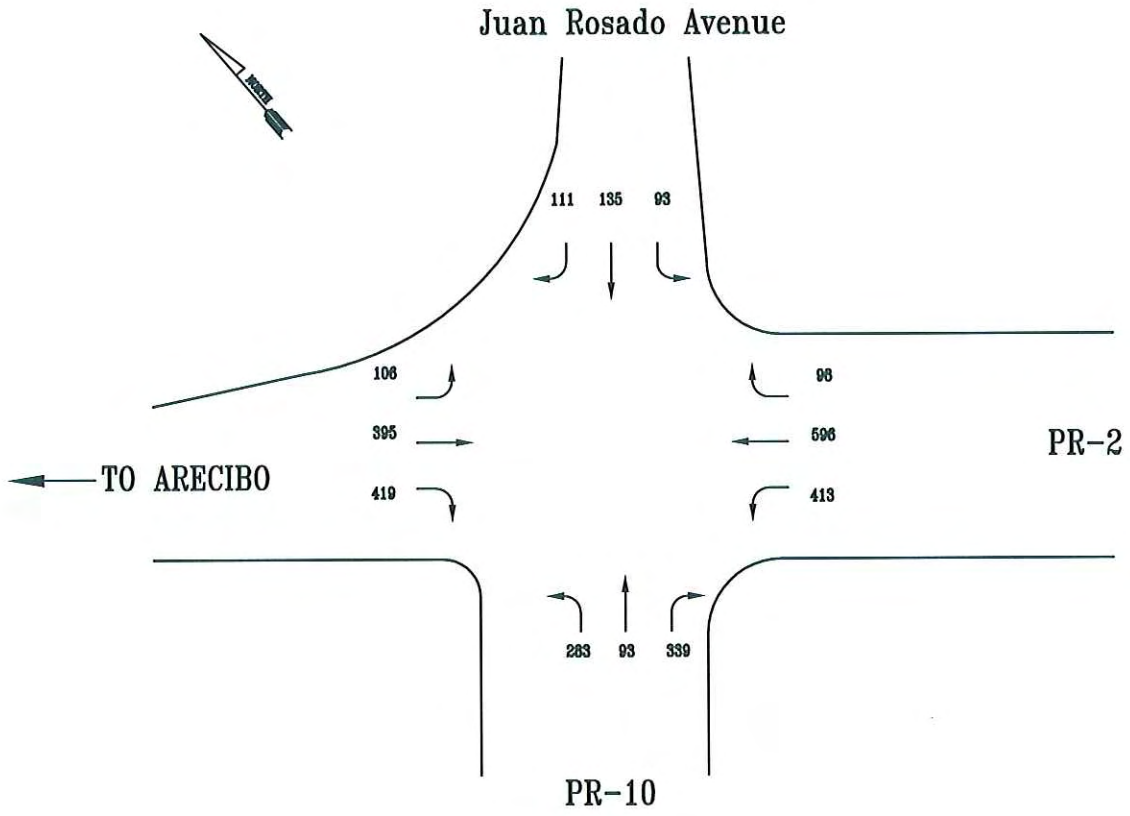

INTERSECTION #2: PR-2 & VICTOR ROJAS AVENUE
2013 AM Peak Hour Volumes

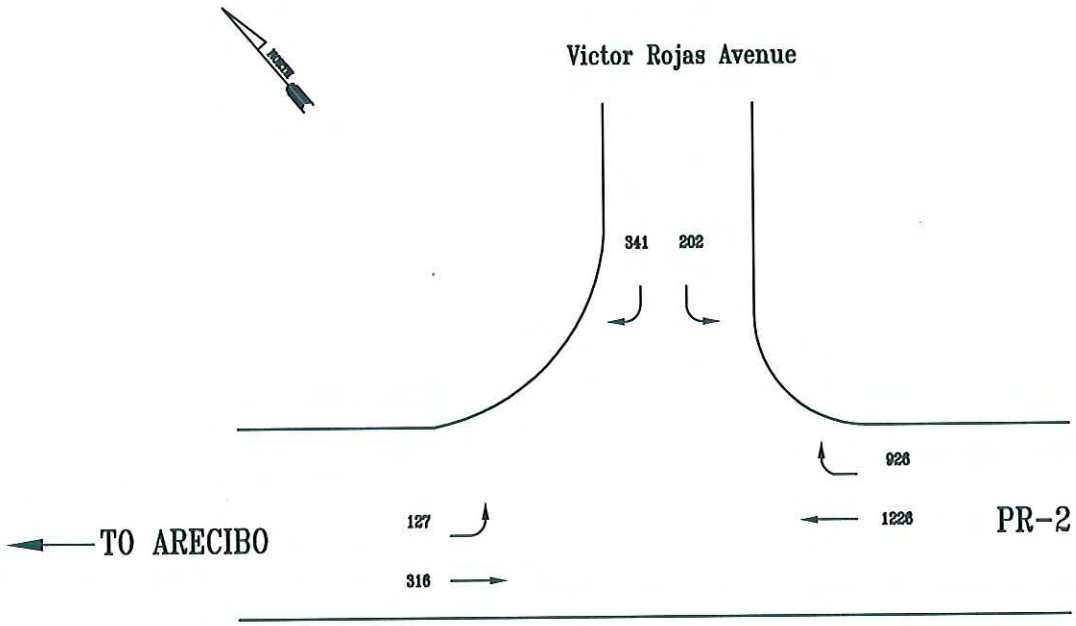

INTERSECTION #2: PR-2 & VICTOR ROJAS AVENUE
2013 PM Peak Hour Volumes

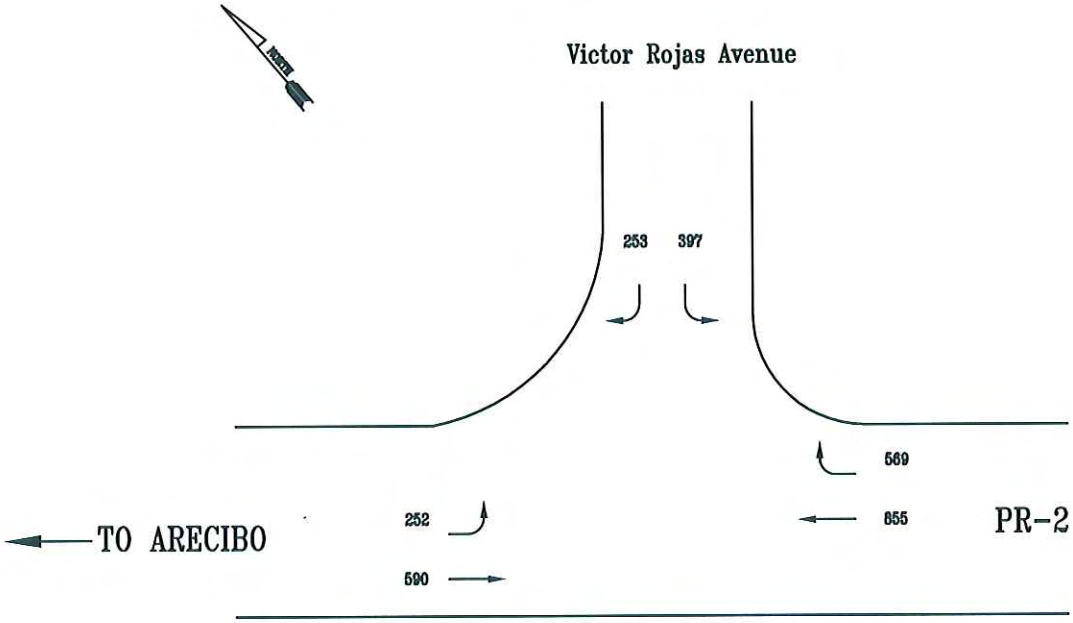

INTERSECTION #3: PR-2 AND ACCESS #1
2013 AM Peak Hour Volumes

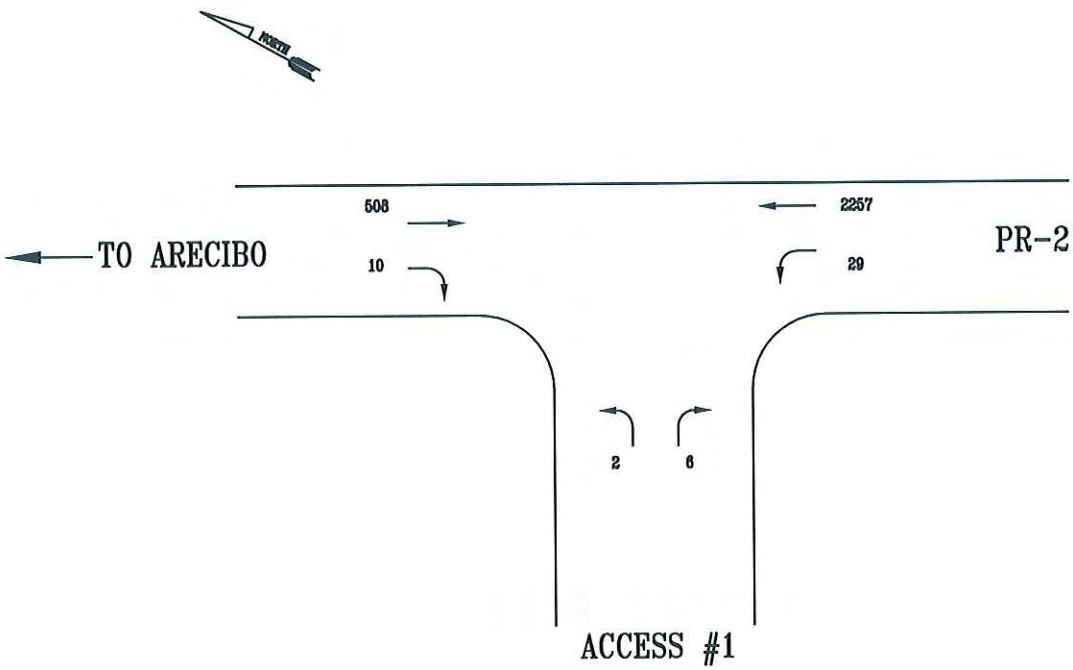

INTERSECTION #3: PR-2 AND ACCESS #1
2013 PM Peak Hour Volumes

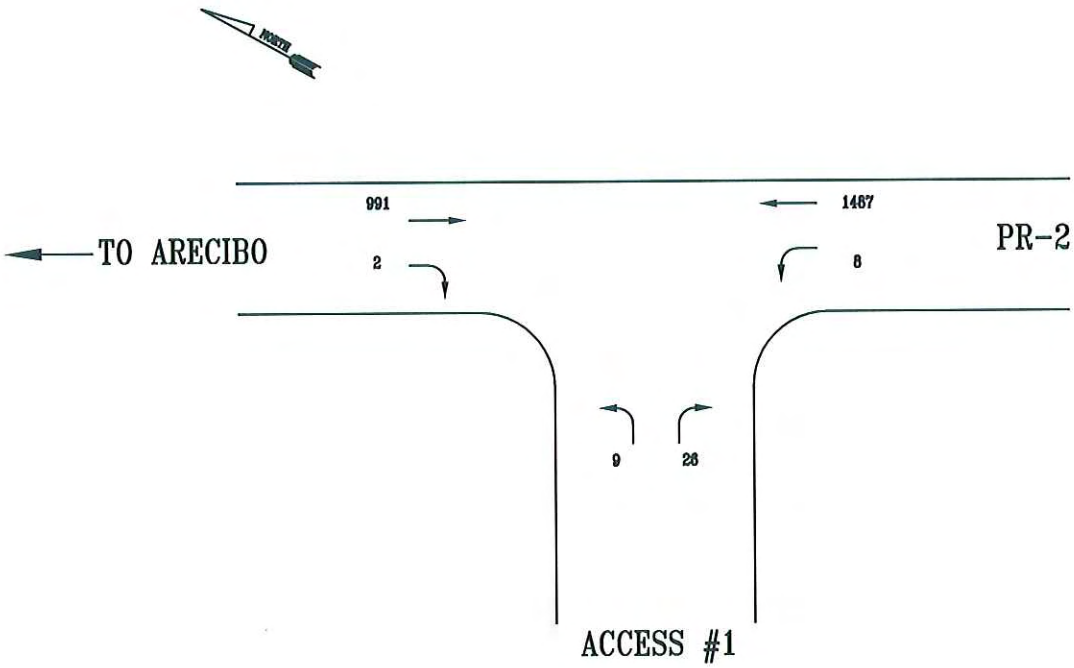

INTERSECTION #4: PR-2 AND ACCESS #2
2013 AM Peak Hour Volumes

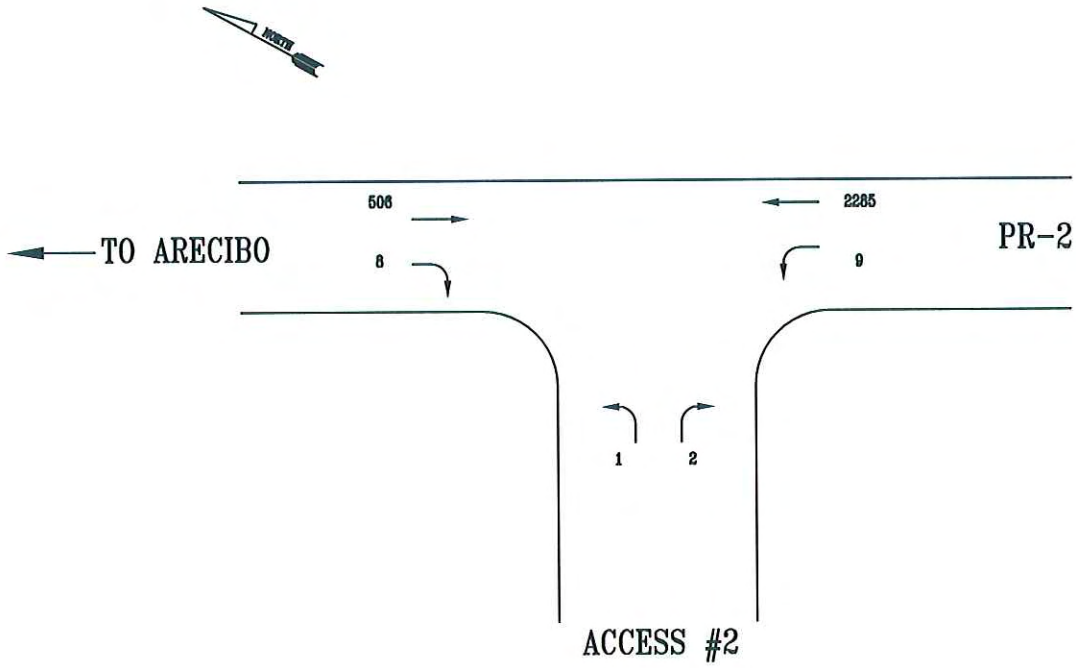

INTERSECTION #4: PR-2 AND ACCESS #2
2013 PM Peak Hour Volumes

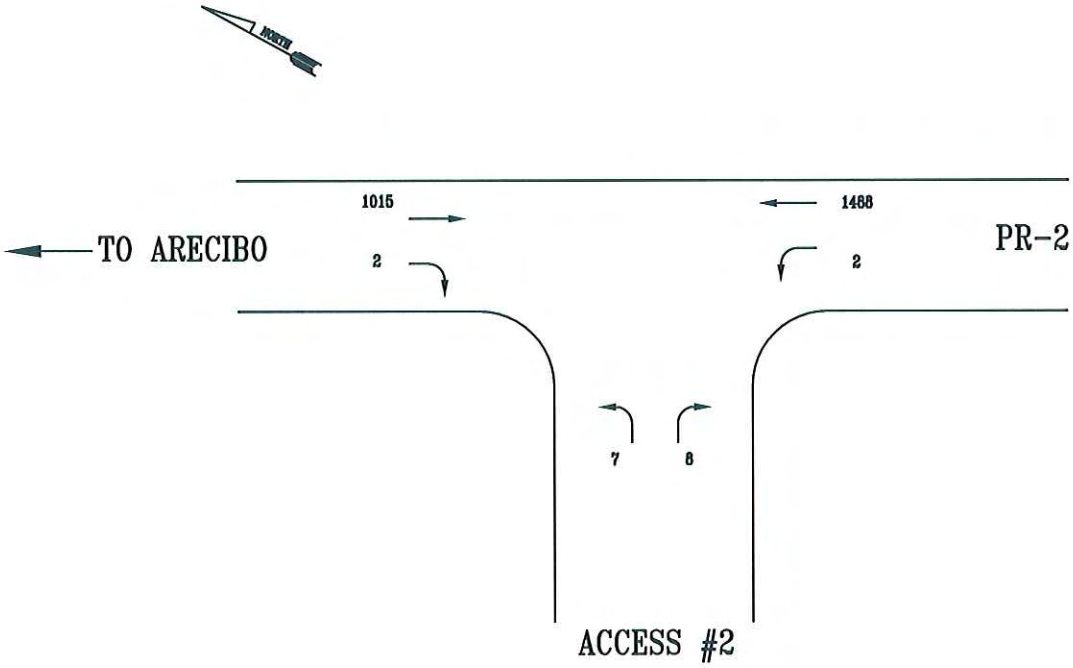

APPENDIX – G

INTERSECTION #1: PR-2 & PR-10 AND JUAN ROSADO AVENUE
2018 AM Peak Hour Volumes

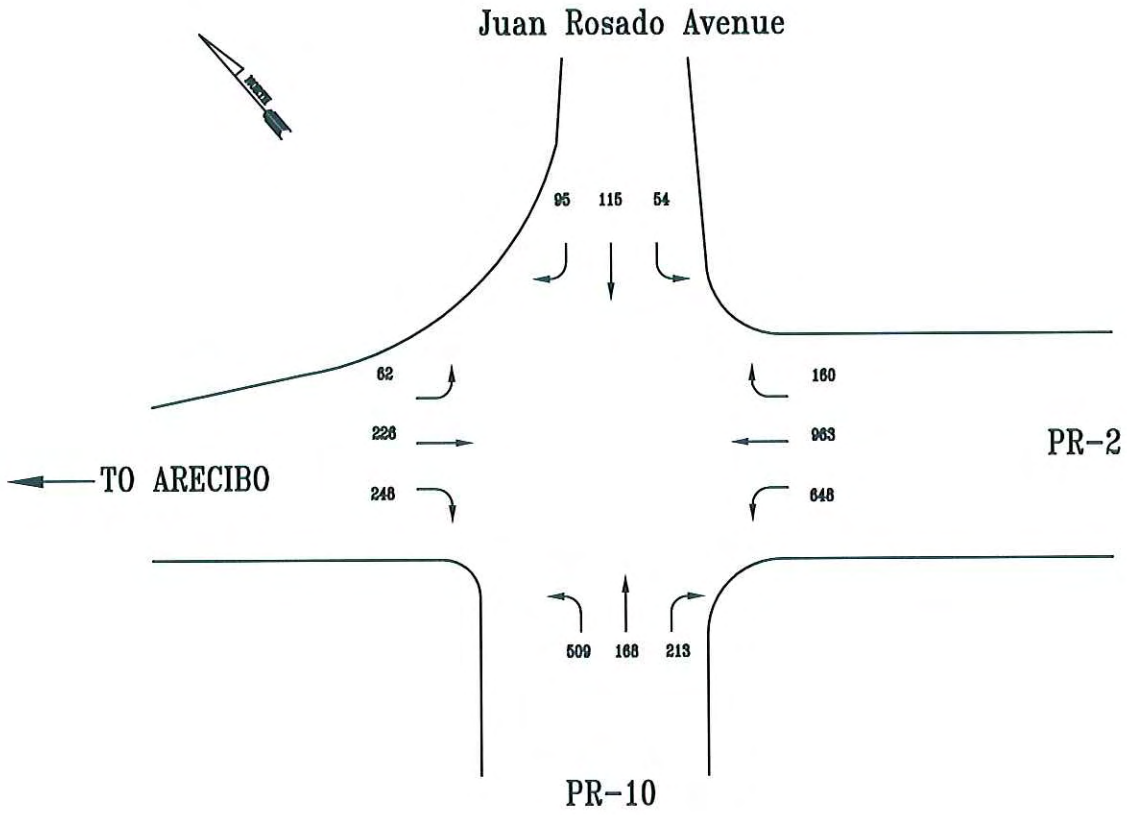

INTERSECTION #1: PR-2 & PR-10 AND JUAN ROSADO AVENUE
2018 PM Peak Hour Volumes

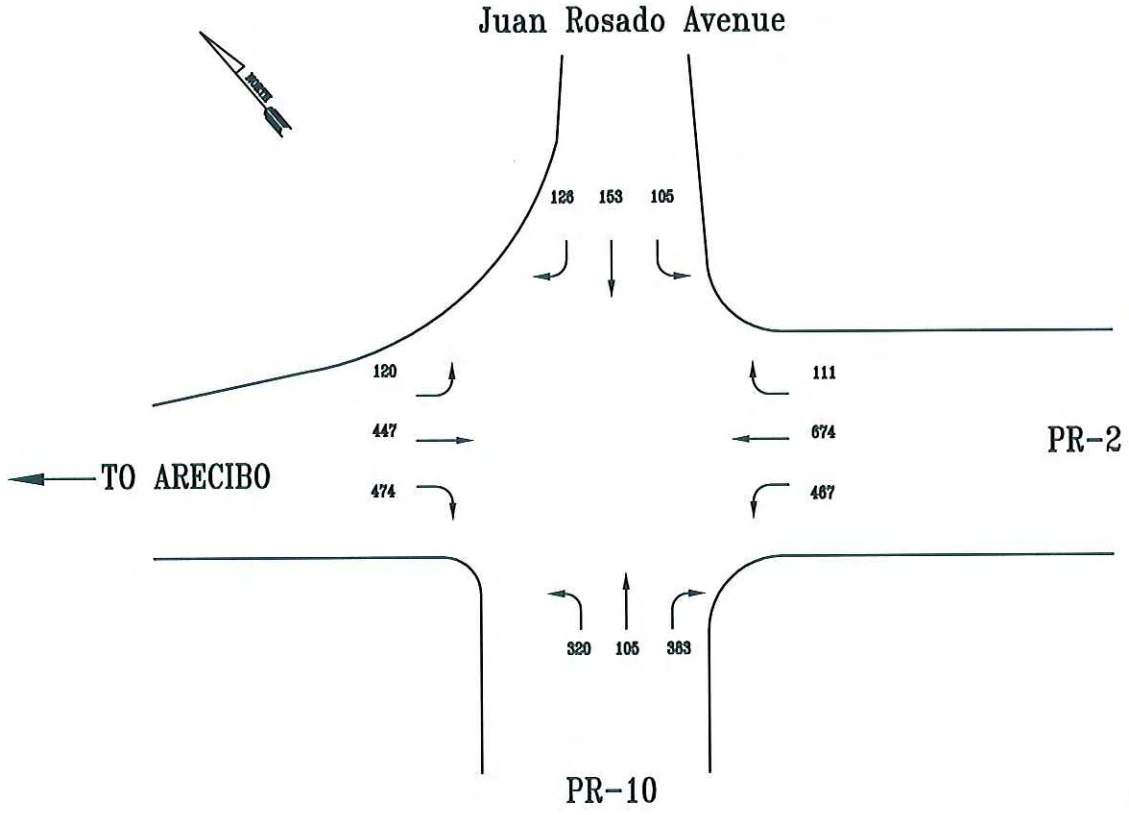

INTERSECTION #2: PR-2 & VICTOR ROJAS AVENUE
2018 AM Peak Hour Volumes

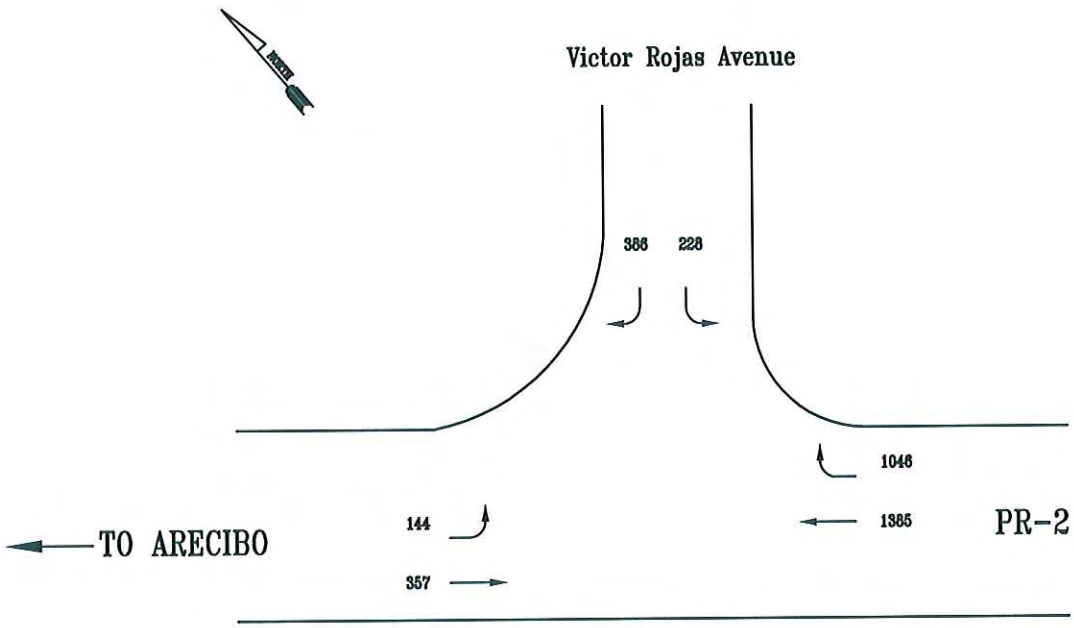

INTERSECTION #2: PR-2 & VICTOR ROJAS AVENUE
2018 PM Peak Hour Volumes

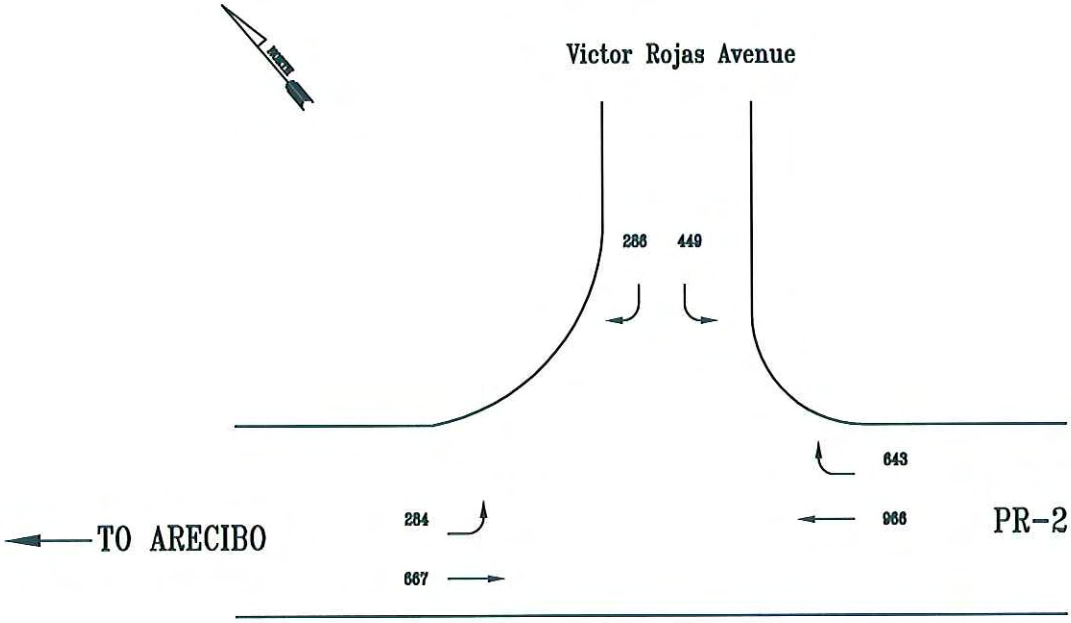

INTERSECTION #3: PR-2 AND ACCESS #1
2018 AM Peak Hour Volumes

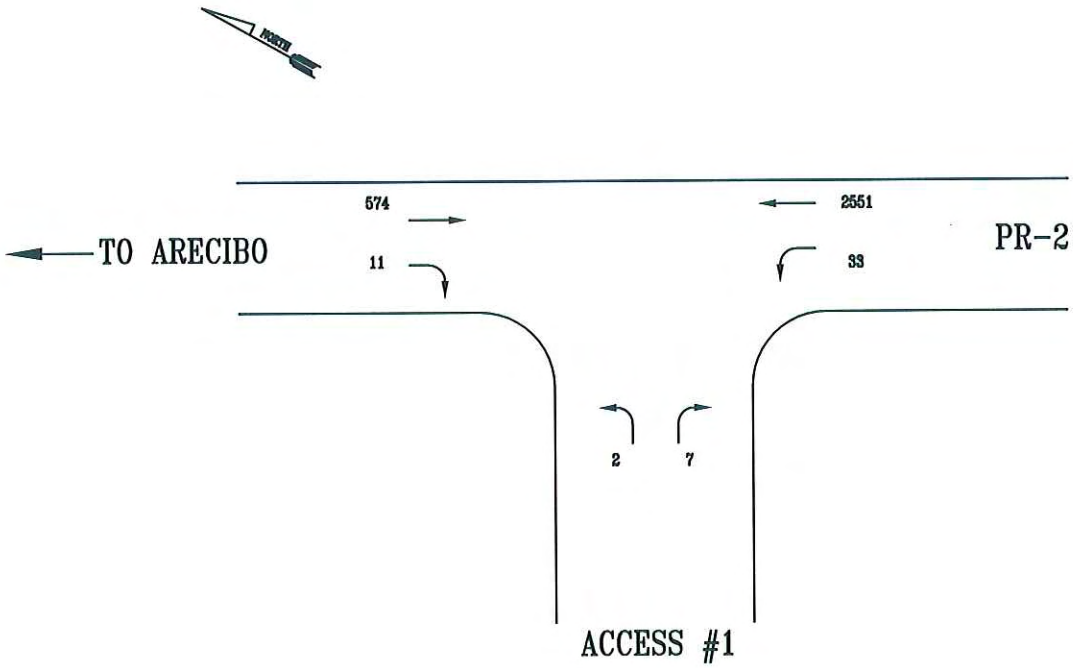

INTERSECTION #3: PR-2 AND ACCESS #1
2018 PM Peak Hour Volumes

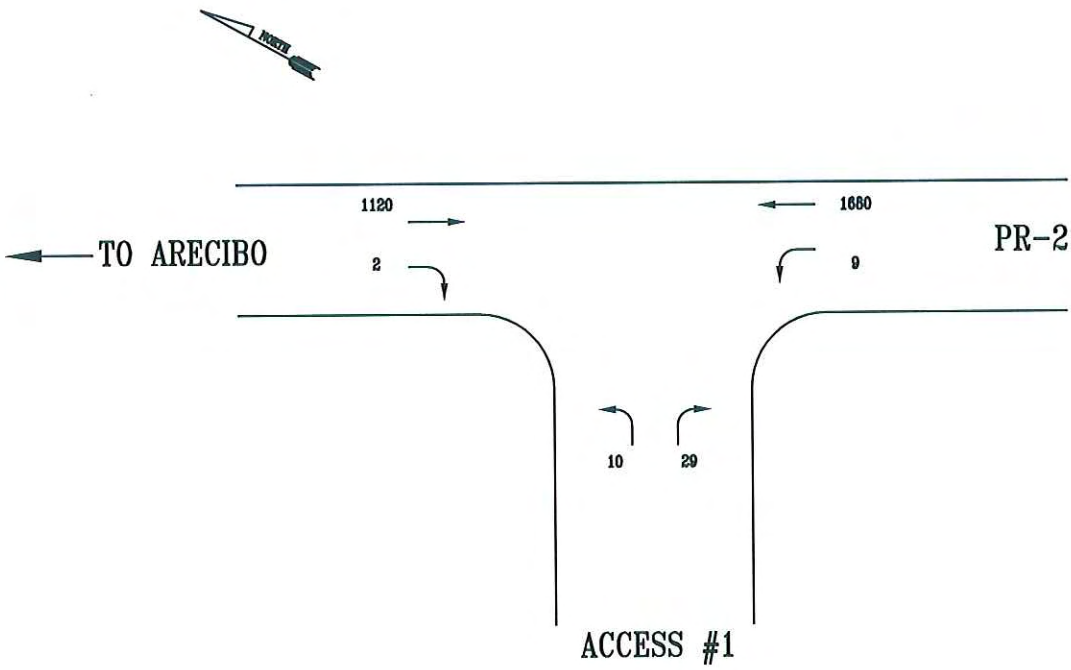

INTERSECTION #4: PR-2 AND ACCESS #2
2018 AM Peak Hour Volumes

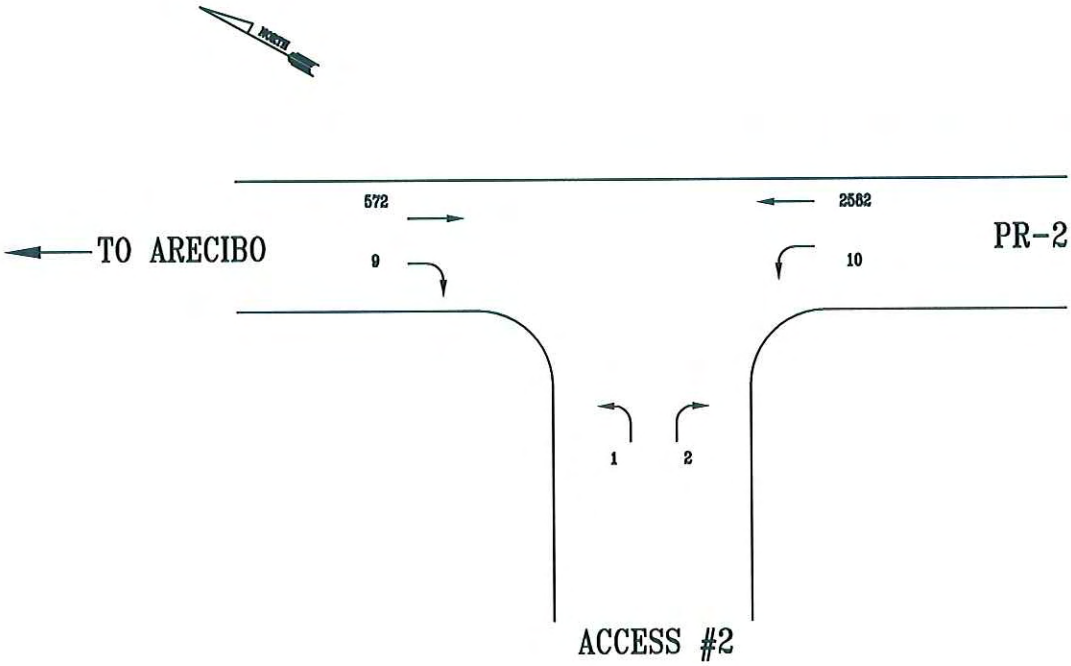
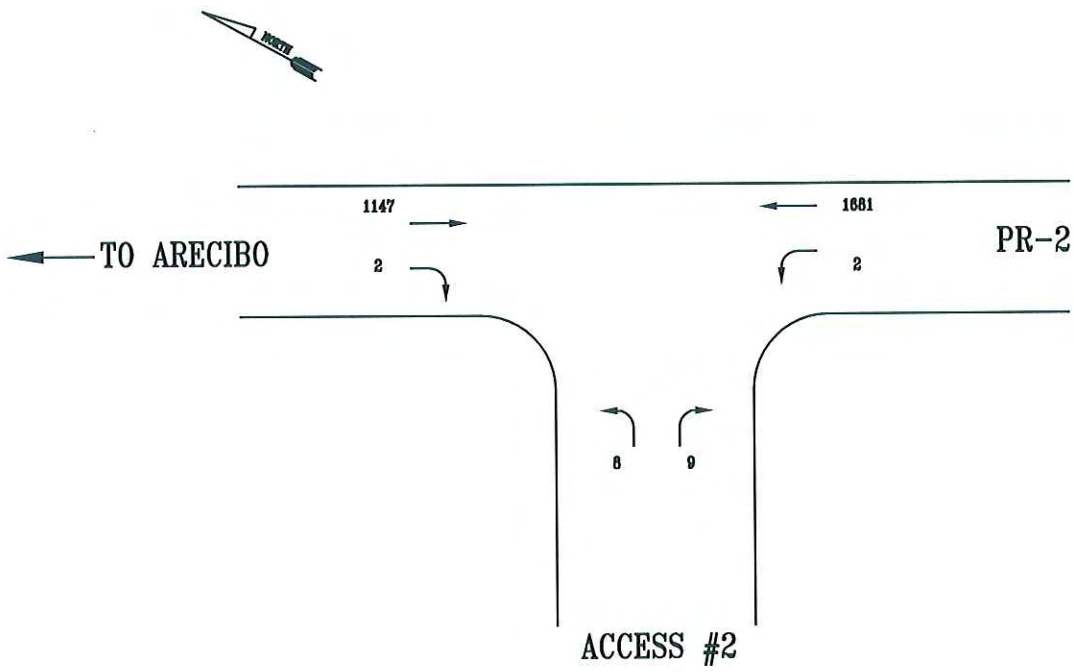
INTERSECTION #4: PR-2 AND ACCESS #2
2018 PM Peak Hour Volumes