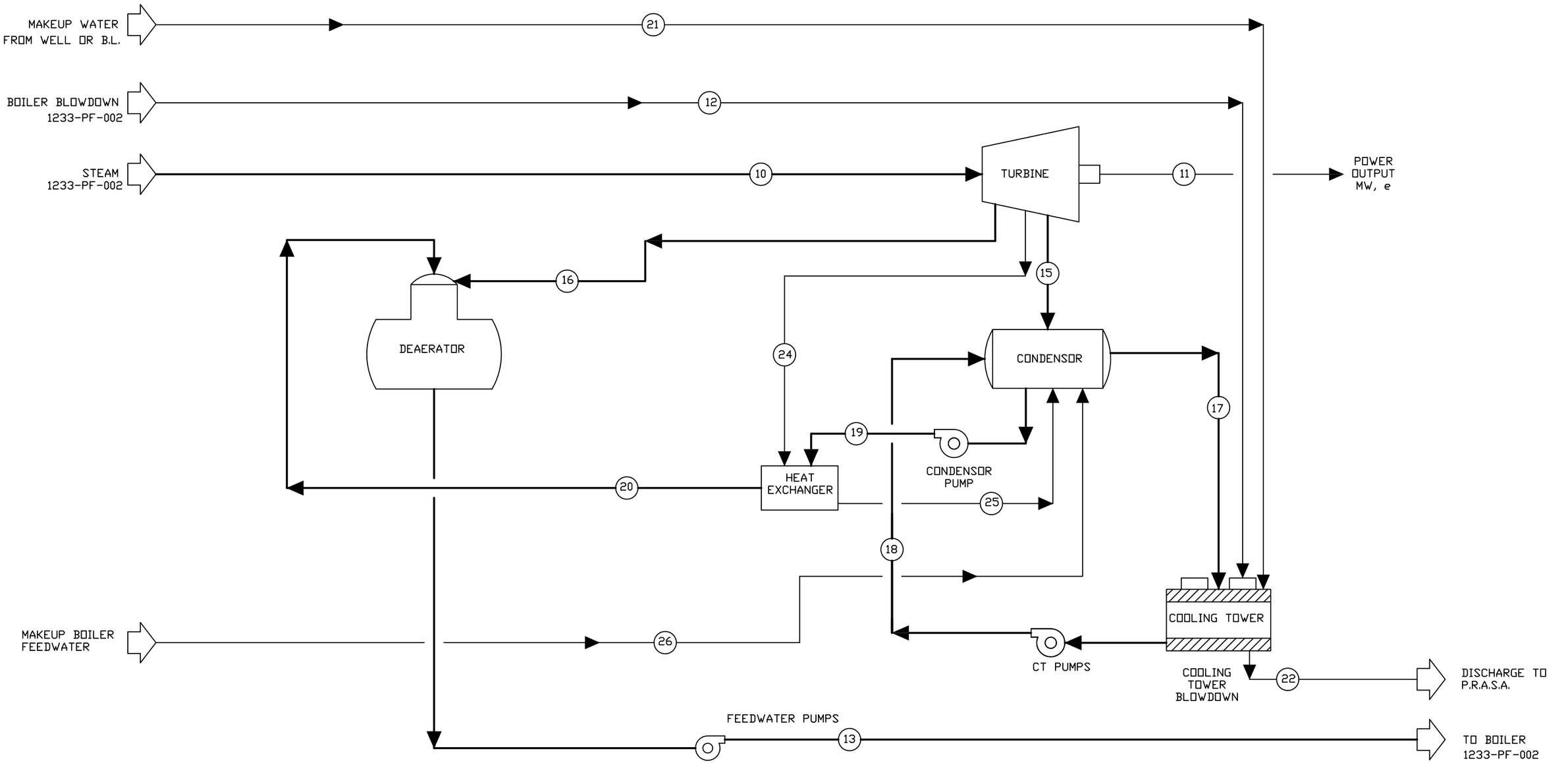

Client/Project/Location

RECAST PR-I, LLC
15 MW PLANT

REV	DATE	DESCRIPTION	BY	CHK
0	9/27/2012	ISSUE FOR RELEASE	MP	DO
D	9/25/2012	GENERAL REVISION	MP	DO
C	9/18/2012	GENERAL REVISION	MP	DO
B	9/20/2012	GENERAL REVISION	MP	DO
A	9-7-2012	PROGRESS PRINT	MP	DO

	BY	DATE
DRAWN	MP	9/27/2012
CHECKED	DO	9/27/1012
APPR'D		
APPR'D		
APPR'D		

TURBINE
FLOW DIAGRAM

WEIGHT:
TOL UNO:
SCALE: NONE

THIS DRAWING IS THE EXCLUSIVE PROPERTY OF WEC, INC., ITS ACCEPTANCE CONSTITUTES AN AGREEMENT THAT IT SHOULD BE TREATED AS A STRICTLY CONFIDENTIAL DOCUMENT USED FOR NO OTHER PURPOSE THAN TO AID IN THE ASSEMBLY OR OPERATION OF UNITS FURNISHED BY WEC, INC., OR AS OTHERWISE EXPRESSLY AUTHORIZED IN WRITING BY WECHSLER E&C, INC., THAT IT IS TO BE RETURNED UPON REQUEST, AND IS NOT TO BE COMMUNICATED, DISCLOSED, OR COPIED EXCEPT AS EXPRESSLY AUTHORIZED IN WRITING BY WEC, INC.

WECHSLER
ENGINEERING | CONSULTING
114 New Street, Suite 9
Decatur, Georgia 30030 • USA
WechslerEng.com
tel. 404.374.0011 fax. 404.374.0131

DRAWING NUMBER: 1233-PF-003

REV: 0